AMBIVALENT SOCIAL SUPPORT AND PSYCHONEUROIMMUNOLOGIC RELATIONSHIPS AMONG WOMEN UNDERGOING SURGERY FOR SUSPECTED ENDOMETRIAL CANCER

By

STACY M. DODD

A DISSERTATION PRESENTED TO THE GRADUATE SCHOOL
OF THE UNIVERSITY OF FLORIDA IN PARTIAL FULFILLMENT
OF THE REQUIREMENTS FOR THE DEGREE OF
DOCTOR OF PHILOSOPHY

UNIVERSITY OF FLORIDA

2010

To my parents, Dennis and Jeriann Dodd

ACKNOWLEDGMENTS

First and foremost, I would like to thank my dissertation chair and graduate school mentor, Dr. Deidre Pereira. I sincerely appreciate the support and guidance Dr. Pereira provided through every step of the dissertation process, as well as throughout my graduate school career. Without her this dissertation most certainly would not exist. Beyond this research, she has played an integral role in my professional development as a whole. Additionally, I would like to extend my gratitude to the members of Dr. Pereira's research laboratory who contributed to the study from which this dissertation was carved. These have included fellow graduate students Sally Jensen, Timothy Sannes, Megan Lipe, Stephanie Garey, and Seema Patidar. Also included are the undergraduate research assistants who contributed countless hours to the study, including Melissa Hosonitz, Amber Martin, Sophie Chrisomalis, and Jenna Taino. Of these, Sally Jensen deserves special note. As the senior graduate student in the lab, Sally served as an informal mentor, providing me insight into the most efficient ways to survive graduate school.

I would also like to thank the physicians, medical residents, nurses, and other staff at the UF & Shands Gynecologic Oncology Clinic who graciously allowed us to conduct this study within their clinic and with their patients. Notably, my appreciation goes out to Dr. Linda Morgan, Ms. Inslee Baldwin, and Ms. Bernice for allowing us to integrate into what was already a very busy clinic in order to conduct this research.

My gratitude extends to the members of my dissertation committee, Dr. Michelle Bishop, Dr. Michael Marsiske, and Dr. Nasser Chegini. I am extremely grateful to have a committee that asks the hard questions in the name of excellent science while remaining supportive and collaborative.

I am extremely lucky to have fantastic parents. I have never had a reason to doubt their love for me and support for all of my endeavors, for which I will be eternally grateful. I also appreciate the support and pride expressed by members of my extended family, including my grandparents and aunts and uncles. They are undoubtedly beginning to wonder if I will ever grow up and get a real job, but I appreciate the fact that they never mention this out loud. I also am very grateful to my friends from graduate school who kept me grounded throughout my years in graduate school, as well as my friends from Michigan who kept me connected to my roots.

Last but certainly not least, I would like to extend my heartfelt appreciation to the women who participated in this study. Their willingness to participate in research in hopes of helping women going through similar experiences in the future is truly inspiring.

TABLE OF CONTENTS

LIST OF TABLES

LIST OF FIGURES

Abstract of Dissertation Presented to the Graduate School
of the University of Florida in Partial Fulfillment of the
Requirements for the Degree of Doctor of Philosophy

AMBIVALENT SOCIAL SUPPORT AND PSYCHONEUROIMMUNOLOGIC RELATIONSHIPS AMONG WOMEN UNDERGOING SURGERY FOR SUSPECTED ENDOMETRIAL CANCER

By

Stacy M. Dodd

August 2010

Chair: Deidre B. Pereira
Major: Psychology

Endometrial cancer is the most common and second most deadly gynecologic cancer occurring among women in the United States. The standard treatment for suspected endometrial cancer is a total abdominal hysterectomy and bilateral salpingo oophorectomy. Previous research has demonstrated that social support is associated with a wide range of beneficial psychosocial and immune outcomes both in healthy and in disease populations. Conversely, a growing body of literature has demonstrated detrimental effects of negative social support on both psychosocial and clinical outcomes in a wide range of populations, including cancer populations. The purpose of the current study was to examine the relationships between ambivalent social support – support characterized by both positive and negative components – from a husband/partner with psychological distress, cortisol, and vascular endothelial growth factor (VEGF) during the perioperative period among women undergoing surgery for suspected endometrial cancer. It was hypothesized that women who reported higher levels of ambivalent social support would report greater psychological distress and would have higher levels of both cortisol and VEGF than women who reported lower

levels of ambivalent social support from a husband/partner. The sample for this study consisted of 70 partnered women recruited at their gynecologic oncology clinic consultation visit. They underwent a semi-structured interview, completed self-report measures, and provided saliva and blood samples both the day prior to surgery and four to six weeks following surgery.

As was hypothesized, ambivalent support from a husband/partner prior to surgery was associated with higher levels of pre-operative psychological distress and greater cortisol levels following surgery. Contrary to study hypotheses, ambivalent social support was unrelated to post-operative psychological distress, pre- or post-operative VEGF, or pre-operative cortisol levels. Also contrary to hypotheses, post-operative ambivalent support from a husband/partner was associated with lower post-operative cortisol levels.

Results of the current study provide important preliminary results demonstrating that ambivalent social support is an important construct to consider in psychosocial and psychoneuroimmunologic studies with cancer patients. Specifically, results of the current study demonstrate that there may be important relationships between ambivalent social support, psychological distress, and cortisol across the perioperative period for women undergoing surgery for suspected endometrial cancer.

CHAPTER 1
INTRODUCTION

Epidemiology of Endometrial Cancer

Endometrial cancer is the most common gynecologic cancer and the second most deadly gynecologic cancer in the United States. In 2009, an estimated 42,160 new cases of endometrial cancer were diagnosed, with approximately 7,780 deaths resulting from the disease (American Cancer Society, 2009). According to the National Cancer Institute Surveillance Epidemiology and End Results (SEER) data, the five-year survival rate for all-stage endometrial cancer is 82.9%, ranging from 95.5% for localized disease to 23.6% for those with distant metastases (Ries et al., 2004). Endometrial cancer most commonly occurs among post-menopausal women between 50-65 years of age (Purdie & Green, 2001). Risk factors for endometrial cancer include family history, early menarche and/or late menopause, nulliparity and infertility, unopposed estrogen, diabetes, hypertension, obesity, and diets high in animal fat (Purdie & Green, 2001). In contrast with risk factors for other cancers (e.g. lung cancer), a history of cigarette smoking has been associated with a lower risk of developing endometrial cancer (Zhou et al., 2008).

Treatment of Endometrial Cancer

Standard treatment of endometrial cancer includes a total abdominal hysterectomy and bilateral salpingo oophorectomy (TAH-BSO) to remove the uterus, cervix, ovaries, and fallopian tubes. Most cases of endometrial cancer are diagnosed at Stage I (Dorigo & Goodman, 2003). If the cancer is diagnosed at a later stage or if the patient is not a surgical candidate, radiation and/or chemotherapy may be used as additional treatments. Despite the favorable survival rates, there is still a large number of women

who do not survive endometrial cancer. Thus investigating psychological and immune variables that may impact cancer outcomes continues to be an important area of research.

Psychoneuroimmunological (PNI) Relations in Gynecologic Cancers

Previous research has begun to illuminate potential associations and mechanisms of the associations between psychosocial factors and cancer incidence, progression, and clinical outcomes. As outlined in a comprehensive review by Antoni and colleagues (2006), psychosocial factors that have been implicated in regard to cancer outcomes include stress, distress, and social support. These psychosocial factors exert an impact on cancer incidence and progression through effects on the hypothalamic-pituitary-adrenal (HPA) axis and the autonomic nervous system (ANS). Stress and distress have been shown to activate these systems, leading to the release of hormones and to immune suppression. For example, stress-activation of the HPA axis leads to hypothalamus secretion of corticotrophin releasing factor (CRF), which stimulates pituitary release of adrenocorticotropic hormone (ACTH). This in turn stimulates adrenal cortex release of glucocorticoids, most notably cortisol, which has immunosuppressive effects (Antoni et al., 2006). Further, chronic stress stimulates sympathetic nervous system (SNS) release of catecholamines, including norepinephrine and epinephrine, which aid in tumor growth and metastasis (Antoni et al., 2006). In contrast to the pro-angiogenic effects of stress and distress, higher levels of social support among ovarian cancer patients has been associated with lower levels of VEGF (Lutgendorf et al., 2002) and IL-6 (Costanzo et al., 2005), both pro-angiogenic factors.

Psychosocial and Cortisol Relationships

Cortisol has been a significant variable of interest in PNI research due to established relationships of cortisol with both psychosocial variables and immune functioning. As mentioned above, cortisol is a stress hormone released following HPA axis activation. The HPA axis may be activated in response to psychosocial stress or distress, and this activation may be buffered by positive social support (see Antoni et al., 2006). Cortisol has been identified as a variable of interest in several studies of cancer populations, most notably among women with breast cancer. In a study of metastatic breast cancer patients, abnormal cortisol slope was associated with increased mortality (Sephton et al., 2000). Conversely, social support among metastatic breast cancer patients was associated with lower cortisol concentrations (Turner-Cobb et al., 2000). As described by Antoni and colleagues (2006), one mechanism through which cortisol may impact cancer outcomes is by working synergistically with catecholamines. Cortisol increases tumor receptors for catecholamines, which then in turn upregulate the expression of angiogenic factors such as VEGF. Additionally, cortisol has been shown to stimulate the growth of prostate cancer cells (Zhao et al., 2000) and enhance proliferation of mammary cancer cells (Simon et al., 1984).Therefore, psychosocial factors may impact cancer outcomes by increasing cortisol concentrations or causing abnormal cortisol rhythms, which in turn may directly impact cancer growth or progression at the cellular level, or indirectly impact angiogenesis by working synergistically with catecholamines.

Psychosocial and VEGF Relationships

VEGF is a pro-angiogenic cytokine that promotes the development of tumor vasculature. Previous research has demonstrated that psychosocial factors may be

associated with increased VEGF levels through the mechanisms outlined above. Much of this research has been performed in ovarian cancer. For example, Lutgendorf and colleagues (2003) demonstrated that stress-related mediators (norepinephrine and epinephrine) stimulate VEGF secretion *in vitro* in two ovarian cancer cell lines. Importantly, the authors demonstrate that the stimulation of VEGF by norepinephrine (and to a lesser extent, epinephrine) occur at levels of norepinephrine that would be released in the body in response to stress. Further, Thaker and colleagues (2006) outline the results of several experiments demonstrating that chronic stress promotes both ovarian cancer tumor growth and angiogenesis in mice. The authors of this study were able to further illuminate the mechanisms by which stress leads to increased tumor growth and VEGF levels. After being exposed to stress, the mice in these studies experienced increased levels of norepinephrine, as would be expected due to the effects of stress on the SNS (Thaker et al., 2007). The authors demonstrated that this led to an increase in VEGF. Notably, the authors demonstrated that the effects of norepinephrine on VEGF levels are mediated by β-adrenergic receptors (βARs), as these effects were mimicked by a β-agonist and blocked by a β-antagonist. In addition to ovarian cancer, stress hormones (specifically norepinephrine) have been shown to upregulate VEGF in nasopharyngeal carcinoma tumor cells (Yang et al., 2006) and multiple myeloma cells (Yang et al., 2008), suggesting that this association holds for a variety of tumor types.

While the research outlined above shows strong evidence for *in vitro* and an animal model link between psychological factors and VEGF, less research has examined these relationships *in vivo* in human populations. However, a few studies to

date have examined the links between psychological variables and VEGF among human cancer populations. Lutgendorf and colleagues (2002) studied the relationship between social support, depression and VEGF among women with ovarian cancer. Results of this study demonstrated that women who reported greater social support had lower VEGF levels prior to undergoing surgery for ovarian cancer. Specifically, women with greater support from friends and neighbors and less geographical distance from friends demonstrated lower VEGF levels. While feelings of helplessness and worthlessness were associated with greater VEGF levels in this sample, depression as a whole was not associated with VEGF (Lutgendorf et al., 2002). In a more recent (2008) study, Lutgendorf and colleagues examined tumor samples collected from women undergoing surgery for ovarian cancer. Results of this study demonstrated that women who reported higher levels of social support had lower levels of VEGF present in the tumor cells. Thus, there is growing evidence that psychosocial factors may have associations with VEGF in *in vivo* studies.

Social Support and Health

A great deal of research examining the effects of social support on health has been designed from the theory that social support is beneficial for both psychosocial and health outcomes among disease populations, primarily through a buffering effect of social support on the deleterious effects of stress. Further, research has supported the hypothesis that a lack of social support is detrimental to health outcomes. Several comprehensive reviews have examined the effects of social support on health (House et al., 1988; Uchino et al., 1996; Cohen, 2004), as well as the associations between marriage and health (Kiecolt-Glaser & Newton, 2001). A great deal of research has demonstrated that social support is beneficial for psychosocial and health outcomes and

that lack of support is detrimental. In fact, one review of the literature concluded that among healthy populations, lack of social support was as strong of a risk factor for negative health outcomes as tobacco use (House et al., 1988).

Social Support among Cancer Populations

There have been a number of studies designed to examine the relationships between social support and psychosocial functioning among individuals with cancer. Devine and colleagues (2003) demonstrated that among a sample of patients undergoing experimental cancer treatment, greater levels of social support were associated with lower levels of intrusive thoughts and avoidance, and higher levels of adjustment following the treatment. For patients undergoing hematopoetic stem cell transplant, pre-transplant social support was significantly associated with pre-transplant anxiety and depression (Wells, Booth-Jones, & Jacobsen, 2009). Similarly, among individuals undergoing bone marrow transplantation, greater social support pre-transplant was associated with lower depression levels post-transplant after controlling for pre-transplant depression levels (Jenks Kettmann & Altmaier, 2008). Manning-Walsh (2005) demonstrated that a broad measure of social support (including all available sources of support) mediated the relationship between symptom distress and quality of life.

In addition to psychosocial outcomes, social support has been associated with biological and clinical outcomes in cancer populations. For example, greater social support has been positively correlated with natural killer cell activity both in peripheral blood and at the site of the tumor in ovarian cancer patients (Lutgendorf et al., 2005). Further, among women diagnosed with metastatic breast cancer, greater levels of social support were associated with lower mean levels of salivary cortisol, though not with

cortisol slope. The authors point out that this relationship is especially significant as higher levels of mean salivary cortisol may be indicative of chronic dysregulation of the HPA axis, which in turn may have further negative impacts on cancer outcomes (Turner-Cobb et al., 2000). In a study of bone marrow transplant patients, pre-transplant affective functioning and social support stability were associated with post-transplant morbidity and mortality. Thus, patients who reported greater social support stability prior to undergoing bone marrow transplantation were more likely to survive following the transplant. The results for compliance and morbidity and mortality were mixed; thus, the effects of social support stability on bone marrow transplant outcomes may not be explained fully by better medical compliance among those with greater stability in social support (Rodrigue et al., 1999). In a recent (In Press) review of studies examining social support and mortality among samples of cancer patients, Pinquart & Duberstein demonstrated that having high levels of perceived social support, larger social networks, and being married were associated with decreased risks of mortality in cancer populations. Therefore, there is evidence that social support has important associations not only with psychosocial functioning in cancer populations, but also with important clinical outcomes in these populations.

Impact of Negative Social Relationships in Cancer

In contrast to the positive effects of social support on psychosocial and clinical outcomes in cancer populations, recent research has begun to investigate the relationships between negative aspects of interpersonal relationships ("negative social support") and psychosocial and physical outcomes. Some of this research has suggested that negative social support may have greater implications for health outcomes than the positive aspects of support. In a series of studies published by

Manne and colleagues, partner unsupportive behaviors were investigated in relation to psychosocial outcomes among cancer patients. In one of the earlier studies, negative responses from a partner were associated with poorer psychological adjustment among individuals with cancer (Manne et al., 1997). To investigate this relationship further, Manne proposed a mediational model, hypothesizing that the relationship between partner unsupportive responses and cancer patients' psychological distress would be mediated by perceived control, coping efficacy, and avoidance coping. Partner unsupportive responses were associated with each of the proposed mediating variables. Psychological distress was associated with coping efficacy and avoidance coping, but not perceived control (Manne & Glassman, 2000). A follow-up study was designed to investigate the contributions of the partner's unsupportive behaviors as reported by the partner as compared to the perception of these behaviors by the patient on psychological distress. Manne and colleagues reported that the patients' perceptions of unsupportive behaviors by their partners was the main contributor to the relationship between unsupportive behaviors and distress among this sample of early-stage breast cancer patients (Manne et al., 2005).

In addition to psychosocial outcomes associated with negative social support in cancer populations, researchers have begun to investigate the relationships between negative social support and clinical outcomes for cancer patients. Though there is a great deal of evidence that lack of social support is predicative of poorer health outcomes, much less research has investigated the relationships between negative social support and clinical health outcomes, despite the fact that lack of support and negative support are very different constructs. An example of the research that is now

beginning to delineate between the positive and negative aspects of social support and their potential differing effects on health outcomes is a study published by Frick and colleagues (2005). The authors report that positive aspects of perceived social support were unrelated to survival in patients undergoing autologous peripheral blood stem cell transplantation. However, the authors report that patients that reported greater levels of "problematic" social support had decreased survival rates (Frick et al., 2005). This provocative study indicates that negative social support is an important construct to study among cancer populations and may have profound impacts on cancer outcomes.

Relational Ambivalence

While the recent increase in investigation into negative social support in cancer has begun to fill an important gap in the social support/cancer literature, it would be misguided to assume that the positive and negative aspects of social relationships are simply opposite extremes on a continuum of social support quality. While there may be some interpersonal relationships that are "all good" or "all bad" it is likely that the vast majority of social relationships a person is involved in throughout her lifetime incorporate the "good" and the "bad." Relationships that a person perceives as both positive and negative are described as ambivalent relationships (Figure 1-1). A question raised from the acknowledgement of ambivalent social relationships is whether these relationships provide the beneficial psychological and health effects of positive social support, the detrimental effects of negative social support, and/or whether the effects of one may moderate the effects of the other. It is possible that the unpredictability of ambivalent relationships may lead to deleterious outcomes both psychologically and physiologically. That is, a person in an ambivalent relationship may have more difficulty predicting what type of support will be provided in a given situation, making it more

difficult to implement other coping strategies when needed. Previous research has demonstrated that ambivalent social relationships are associated with poorer psychological functioning as compared to relationships that were deemed to be primarily “helpful” or “unhelpful.” (Pagel et al.,1987). In addition to psychosocial correlates of ambivalent social relationships, recent research has begun to investigate the effects of ambivalent social support on health. Specifically, the association between ambivalent social ties and cardiovascular functioning has been investigated in several studies (Holt-Lunstad et al., 2003; Holt-Lunstad et al., 2007; Uchino et al., 2001). In the initial study in this line of investigation, Uchino and colleagues demonstrated cross-sectionally that positive social ties were associated with better psychological functioning and lower age-related differences in cardiovascular functioning, while negative social ties were associated with poorer psychological functioning. Additionally, and an important contribution to the existing literature, this study demonstrated that ambivalent social support was associated with both greater depressive symptoms and greater age-related differences in cardiovascular functioning than those associated with negative social support (Uchino et al., 2001). In follow up studies, Holt-Lunstad and colleagues demonstrated that when participants rated a relationship as ambivalent, they demonstrated greater ambulatory systolic blood pressure (Holt-Lunstad et al., 2003) and greater heart rate and lower respiratory sinus arrhythmia (Holt-Lunstad et al., 2007) during interactions with that person than with a person with which they reported a primarily positive relationship. Thus, ambivalent social relationships have been shown to have negative impacts on psychological and cardiovascular functioning, though

potential relationships between ambivalent social relationships and other health outcomes has yet to be investigated.

Relational and Gender Influences on Health

Previous research has suggested that one of the most salient sources of social support for cancer patients is a spouse/partner (Kiecolt-Glaser & Newton, 2001; Manne et al., 1997). Marital status has been implicated as a predictor of survival in some, but not all, studies with cancer patients (Jatoi et al., 2007). One reason for this discrepancy may be that it is not martial status per se that may impact survival outcomes, but rather the quality of the marital relationship. Specifically, ambivalent spousal relationships may have important effects on cancer outcomes. Ambivalent relationships may occur more frequently in marital relationships than in other relationships (e.g. friendships), as martial relationships generally involve more time spent together and less options and opportunities to avoid negative social support if it is present in the relationship.

It is important to note that there may be important gender differences in cancer outcomes associated with social support. Kiecolt-Glaser & Newton (2001) provide a very comprehensive review of the differential health impacts of marriage on men and women (with a focus on cardiovascular and immune outcomes) and conclude that marriage may be more beneficial for the health of men than women. These gender differences in the effects of marital status and quality of social support on cancer outcomes have not been adequately explored among cancer populations to date. The current study acknowledges the potential differences in effects of marital support based upon gender and focuses specifically on women.

Purpose of the Current Study

The current study was designed to begin to fill in several important gaps in the current literature. Previous research has demonstrated that positive social support is associated with beneficial psychological and clinical outcomes among cancer patients and negative or lack of social support leads to undesirable outcomes. However, no research to date has investigated the impact of ambivalent social support, which has been shown to be associated with poorer psychological and cardiovascular functioning, on psychological and clinical outcomes in a cancer population. Previous psychoneuroimmunologic research has demonstrated that psychosocial factors, such as psychological distress and social support, are associated with both cortisol and VEGF, which may have important influences on tumorigenesis. Because of importance of the marital relationship demonstrated in previous studies of cancer populations on outcome variables such as survival and psychological functioning (Kiecolt-Glaser & Newton, 2001; Jatoi et al., 2007; Manne et al., 1997), the current study focuses on women who are married or living with a partner. This study provides a unique and important contribution to the literature by focusing on female cancer patients, therefore reducing variability due to potential gender differences in the effects of social relationships on health. Taken together, the current study investigates the relationships among ambivalent social support from a husband/partner, psychological distress, cortisol, and VEGF levels in women with suspected endometrial cancer during the perioperative period.

Specific Aims

Aim 1: To examine pre-surgical relationships between ambivalent social support from a husband/partner and psychological distress (anxiety and depressive symptoms)

among women undergoing total abdominal hysterectomy and bilateral salpingo oophorectomy (TAH-BSO) for suspected endometrial cancer.

Hypothesis 1: Women who report higher levels of ambivalent social support from their husband/partner will report more anxiety and depressive symptoms prior to surgery than women who report lower levels of ambivalent social support from their husband/partner.

Aim 2: To examine pre-surgical relationships between ambivalent social support from a husband/partner and plasma vascular endothelial growth factor (VEGF) levels.

Hypothesis 2: Women who report higher levels of ambivalent social support from their husband/partner prior to surgery will have higher pre-surgical VEGF levels than women who report lower levels of ambivalent social support from their husband/partner.

Aim 3: To examine pre-surgical relationships between ambivalent social support from a husband/partner and cortisol levels.

Hypothesis 3: Women who report higher levels of ambivalent social support from their husband/partner prior to surgery will demonstrate higher cortisol levels, as measured by cortisol Area Under the Curve with respect to increase (AUCi), than women who report lower levels of ambivalent social support from a husband/partner.

Aim 4: To examine relationships between post-operative ambivalent social support from a husband/partner and post-operative psychological distress (anxiety and depressive symptoms).

Hypothesis 4: Women who report higher ambivalent social support post-operatively from a husband/partner will report more anxiety and depressive symptoms

post-operatively than women who report lower post-operative social support from a husband/partner.

Aim 5: To examine relationships between post-operative ambivalent social support from a husband/partner and post-operative VEGF levels.

Hypothesis 5: Women who report higher post-operative ambivalent social support from a husband/partner will demonstrate higher post-operative VEGF levels than women who report lower post-operative ambivalent social support from a husband/partner.

Aim 6: To examine relationships between post-operative ambivalent social support from a husband/partner and post-operative cortisol levels.

Hypothesis 6: Women who report higher levels of post-operative ambivalent social support from a husband/partner will demonstrate higher post-operative cortisol AUC than women who report lower levels of post-operative ambivalent social support from a husband/partner.

In addition to these six specific aims and hypotheses of the current study, exploratory analyses were planned to examine the relationship between emotional and negative social support from a husband/partner and the above outcomes.

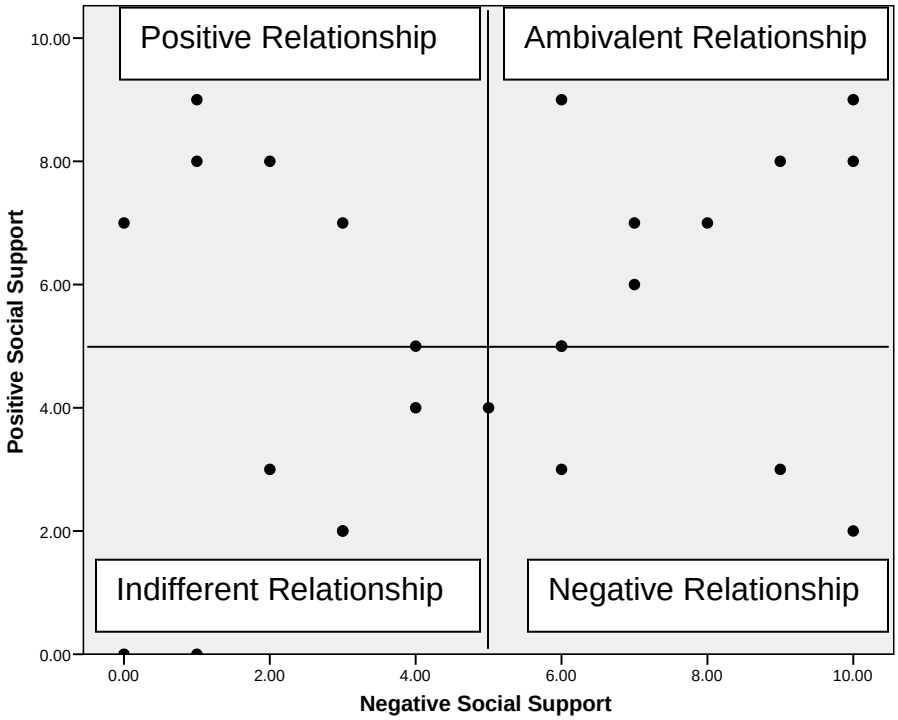

Figure 1-1. Theoretical model of social relationships

CHAPTER 2
METHODS

This prospective study investigated a sample of partnered women with suspected endometrial cancer who underwent TAH-BSO. Participants were recruited from the UF & Shands Gynecologic Oncology Clinic in Gainesville, Florida. Participants completed a psychosocial interview within a week prior to surgery and again four to six weeks following surgery. Peripheral venous blood draws were conducted one day prior to and four to six weeks following surgery to measure VEGF levels. The participants in this study collected saliva samples for the three days prior to their pre-operative and post-operative clinic visits for measurement of diurnal salivary cortisol. The study was conducted according to the rules and regulations of the Institutional Review Board (IRB) of the University of Florida. This study was IRB approved (approval number 69-2004).

Participants

Inclusion criteria for participants in this study were as follows: (a) women undergoing TAH-BSO with or without pelvic lymph node dissection for either (i) an abnormal endometrial biopsy concerning for endometrial cancer or (ii) a complex adnexal mass without ascites or omental caking concerning for Stage I gynecologic malignancy, (b) fluency in spoken English, and (c) married/partnered. Exclusion criteria for participants were: (a) recurrent endometrial carcinoma, (b) metastasis to the uterine corpus from another site, (c) pre-surgical chemotherapy or radiotherapy, (d) current psychotic disorder, and (e) current suicidal intent/plan.

Procedures

Participants were recruited from the Gynecologic Oncology Clinic at UF & Shands Medical Plaza. Potentially eligible participants were identified at their treatment

consultation visit by research personnel and the attending physician, residents, and nurse practitioner. Potentially eligible patients were notified of the opportunity to participate in a research project by one of the previously listed health care providers. If a patient expressed interest in participating, she met with a trained researcher who provided an overview of the study and answered any questions. If a patient indicated that she was willing to participate in the study, she was asked to read and sign the IRB-approved consent form. Following informed consent, she underwent a brief screening assessment of suicidality and psychosis (if psychosis was suspected). If suicidal ideation and psychosis were not identified in screening, the participant was provided with study materials including psychosocial questionnaires and saliva collection materials – 12 Salivettes (Sarstedt, Inc., Newton, NC), one cryomarker, and a soft-sided cooler for Salivette storage.

For the three days prior to their pre-operative appointment, participants collected saliva samples at 8:00 a.m., 12:00 p.m., 5:00 p.m., and 9:00 p.m. If the actual time participants collected saliva deviated from the requested times, they were asked to record the actual time a sample was taken on the salivette. The saliva samples were delivered to study staff at the time of the pre-operative appointment. At that time, participants completed a brief psychosocial interview in a private room in the Gynecologic Oncology Clinic. Following the psychosocial interview, participants were provided $20 as compensation for participation in the study. After their pre-surgical appointment in the medical plaza, participants went to the pre-surgical center in Shands Hospital. During the appointment in the pre-surgical center, participants underwent a peripheral venous blood draw as part of standard medical care. At that time, blood

collection tubes were provided to the phlebotomist in order to collect blood for VEGF analysis in this study.

As part of standard medical care, women are scheduled for a post-operative appointment in the Gynecologic Oncology Clinic approximately four to six weeks following TAH-BSO. Prior to and during those appointments, study procedures were conducted parallel to those conducted at the pre-operative appointment (saliva collection, psychosocial interview, blood draw). The only change from pre-operative procedures at the post-operative timepoint was that a blood draw is not generally standard of care post-operatively; thus, women were asked to have blood drawn at this timepoint solely for study purposes. This blood draw was conducted in the laboratory station located in the UF & Shands Medical Plaza.

Psychosocial Assessment

The following psychological/psychiatric measures were completed prior to study entry to determine participants' eligibility:

Suicidality. In order to assess for suicidality, the Beck Scale for Suicide Ideation (BSS - Beck & Steer, 1991) was completed by participants. The BSS is a 21-item, self-report measure of the presence and severity of suicidal ideation. The reliability of the BSS is well-established, with coefficient alphas ranging from .87-.90 (Beck & Steer, 1991).The concurrent validity of the BSS is demonstrated by moderate to high correlations with other measures of suicidal construct (Beck & Steer, 1991). Although little published data exist regarding the use of the BSS as a screening tool among cancer populations, it has been used extensively among inpatient and outpatient psychiatric populations (Pinninti et al., 2002). Women reporting current suicidal ideation, intent, or plan were referred immediately to the Psycho-Oncology Clinic at the

Psychology Clinic (under the supervision of Deidre Pereira, Ph.D., licensed psychologist) as well as Psychiatry. Women reporting current suicidal ideation, intent, or plan were not eligible for participation in this study (see exclusion criteria noted above).

Psychosis. If psychosis was suspected, participants were screened using the Psychotic Screening Module of the Structured Clinical Interview for DSM-IV for non-clinical populations (SCID-NP - Spitzer et al., 1992). The SCID-NP is a semi-structured interview for making DSM-IV Axis I psychotic diagnoses in non-psychiatric populations. The SCID-NP has been used widely as a brief screening measure of psychotic disorders among patients with medical illness, such as HIV (Penedo et al., 2003). Women with current psychotic symptoms were referred immediately to Psychiatry for evaluation and treatment. Women with current psychotic symptoms were not eligible for participation in this study (see exclusion criteria noted above).

The following psychosocial questionnaire was completed by the participants prior to returning to the clinic for the pre-operative appointment:

Demographics. Demographic characteristics were assessed using the MacArthur Sociodemographic Questionnaire (MSQ) (Adler et al., 2000). The MSQ is a questionnaire developed by the MacArthur Foundation that assesses subjective and objective social status. To assess subjective social status, participants indicate their perceived standing in the community and the country by marking their standing on a picture of a ladder with ten rungs. A variety of traditional socioeconomic status questions such as education level, employment status, and income assess objective social status. The MSQ was completed by the participants prior to attending their pre-operative appointment.

The following psychosocial variables were assessed prior to or during both the pre-surgical and post-surgical appointments.

Ambivalent social support. Social support was assessed using the Sources of Social Support Scale (SSSS) (Carver, 2006). The SSSS is a 50-item questionnaire developed to assess various *aspects* of perceived social support (e.g. emotional support, negative support) from various *sources* of support (e.g. spouse/partner, friends). Each question asks the respondent to rate the frequency that they receive the various aspects of support from the various sources on a 5-point Likert scale ranging from (1) “Not at all” to (5) “A lot.” The SSSS was chosen as the measure of social support for this study for several reasons. First, the SSSS was designed for and has been used with cancer populations in previous work. Drs. Charles Carver and Michael H. Antoni developed the SSSS at the University of Miami to measure social support received by breast cancer patients. The SSSS has also been used as the primary measure of social support among breast cancer, prostate cancer, and cervical cancer patients in an NCI-funded P50 at the University of Miami (P.I., Michael Antoni, Ph.D.) Second, this study sought to measure both positive and negative aspects of social support, and most standard measures of social support, such as the Social Provisions Scale (SPS) (Baron et al., 1990) do not assess negative facets of social support. Finally, this study investigated support from a specific source (i.e. husband/partner) and the SSSS provides measurements of support from specific sources. In order to assess for ambivalent social support from a husband/partner, the methods of Thompson, Zanna & Griffin of measuring attitudinal ambivalence were applied to participants’ scores on

the questions assessing emotional and negative perceived social support from a husband/partner on the SSSS (Thompson et al., 1995).

Anxiety and depression. Anxiety and depression were assessed using the Structured Interview Guide for the Hamilton Anxiety and Depression Scale (SIGH-AD) (Williams, 1988). Based on the Hamilton Anxiety Scale (Hamilton, 1959) and the Hamilton Depression Scale (Hamilton, 1960), the SIGH-AD is a semi-structured interview that has previously been used with chronically ill populations (Brown et al., 1992). This study utilized an abbreviated version of the SIGH-AD that excludes depressive and anxious symptoms that occur with frequency among women with gynecologic malignancies due to the physical effects of the tumor and/or its treatment (i.e., loss of libido, weight loss, sensory and muscular somatic symptoms, and genitourinary, gastrointestinal, autonomic, cardiovascular, and respiratory symptoms). Depression subscale scores on this abbreviated version of the SIGH-AD range from zero (no depressive symptoms) to 36 (severe depressive symptoms), while anxiety subscale scores range from 0 (no anxious symptoms) to 28 (severe anxious symptoms). For the purposes of the present study, depression and anxiety subscale scores were summed to provide a total psychological distress score. Any depressive symptoms deemed to be possibly or definitely organic in origin were identified, and the severity scores associated with these symptoms were subtracted from the total distress score. This resulted in a total psychological distress score that excludes any symptoms potentially caused by organic factors.

Cortisol Measurement

Cortisol was measured through participants' saliva, which has been show to be a reliable assessment of free cortisol levels in the blood (Kirschbaum & Hellhammer,

1994). Participants were provided with saliva collection materials for both their pre- and post-operative appointments. These materials included 12 Salivettes (Sarstedt, Inc., Newton, NC), a soft-sided insulated cooler, a cryomarker, and a brochure outlining saliva collection procedures. Salivettes are plastic centrifuge tubes that hold a cotton role that was placed in the participant's mouth and saturated with saliva during each collection point. Participants were asked to collect saliva at 8 a.m., 12 p.m., 5 p.m., and 9 p.m. on each of the three days preceding their pre- and post-operative appointments. In order to control for differences in saliva collection time, participants were encouraged to record the time of saliva collection if it differed from that noted above. After the participants returned the supplies, the saliva samples were transported to the College of Nursing Biobehavioral Research Laboratory for storage.

After the completion of data collection for this study, saliva samples were mailed to Salimetrics (State College, PA), where they were analyzed using Enzyme-Linked Immunosorbent Assay (ELISA) kits. ELISA is a technique used to measure immune factors such as cortisol. Briefly, cortisol ELISA procedures use a surface covered by a rabbit antibody to cortisol. Cortisol that has been mixed with horseradish peroxidase is added to the surface along with the test sample. The solution then changes color depending on how much of the known cortisol (bound to horseradish peroxidase) binds to the antibodies. The color of the solution is then compared to a plate reader to determine the cortisol concentration of the sample, with darker colors indicating lower cortisol concentrations in the sample being tested. Sensitivity levels for this assay technique are <0.003 µg/dL.

VEGF Measurement

VEGF was measured from the participants' plasma using a commercially available ELISA kit (VEGF Quantkine Kit, R & D Diagnostics, Minneapolis, MN). Briefly, this assay uses a sandwich enzyme immunoassay technique. A VEGF specific antibody is coated into the wells of a microplate, which are then filled with test samples and standards. VEGF present in the sample binds to the antibody. Unbound substances are removed from the wells and an enzyme specific for VEGF is then added. This is again washed away, and a substrate solution is added to change the color in proportion to the amount of bound VEGF. Using this ELISA kit, the minimum detectable dose of VEGF is typically less than 9.0 pg/mL. The VEGF measurements were performed by Dr. Edward Chan's laboratory in the Department of Oral Biology at the University of Florida.

Statistical Procedures

Ambivalent Social Support Calculation

Research regarding social relationships has recently begun challenging the assumption that relationships are bipolar constructs (i.e. either all good or all bad). Instead, there is a growing acknowledgment that relationships may be "ambivalent," that is, they are comprised of both negative and positive aspects. However, capturing this relational ambivalence statistically has proven challenging. Work in this area has grown out of the ideas and methods of measuring attitudinal ambivalence, a related construct. Thompson, Zanna, & Griffin provide a review of methodological and conceptual models of attitudinal ambivalence (Thompson et al., 1995). The authors assert that there are "two necessary and sufficient conditions of ambivalence": (1) the two attitude components must be similar in magnitude and (2) the components must be of at least moderate intensity (Thompson, Zanna, & Griffin, 1995, p. 369). In order to measure the

similarity of the two components, the absolute value of the difference between the components is calculated. Positive and negative components that are close in magnitude would be considered to be more ambivalent than those that are less similar in magnitude. For example, if using a Likert scale from 1-5 measuring the positive and negative component, a person who rates 4 on the positive component and 5 on the negative component would be more ambivalent than a person who rates 1 on the positive component and 5 on the negative component. To measure the intensity of the two components, the average of the components is calculated. Thus, someone who feels strongly negative and positive about the relationship or attitude would have a stronger ambivalent attitude than someone who has lower ratings. Combining the two components described by Thompson, Zanna, & Griffin (1995) into a formula yields Equation 2-1, where P represents the positive component and N represents the negative component. While initially used to measure attitudinal ambivalence, this formulation has also been applied to measure ambivalence in relationships (Willson et al., 2003).

$$(P+N)/2 - |P - N| \quad (2\text{-}1)$$

In the current study, we utilized Equation 2-1 to compute perceived ambivalent social support from a husband/partner. In order to compute the positive component, the participant's scores on the four questions measuring emotional social support from a husband/partner (SSSS questions 3-6) were summed, resulting in possible scores of 4-20. In order to compute the negative component, the participant's scores on the four questions measuring negative social support from a husband/partner (SSSS questions 7-10) were summed, resulting in possible negative social support scores of 4-20.

Imputing these scores into the formula presented above resulted in possible ambivalence scores ranging from -4 (low ambivalence, N = 4, P = 20 or N = 20, P = 4) to 20 (high ambivalence, N = 20, P = 20).

Salivary Cortisol Calculation

The stress hormone cortisol has been studied extensively in the psychoneuroimmunologic literature. There are several strategies for measuring cortisol and each provides different information regarding hormonal output, sensitivity, and pattern. Vedhara and colleagues (2005) described four commonly used cortisol indices in cancer populations: early morning cortisol peak, diurnal cortisol slope, cortisol area under the curve with respect to ground (AUCg), and cortisol area under the curve with respect to increase (AUCi). While there are significant correlations between these indices of cortisol output, each provides unique information regarding the hormonal activity. Early morning cortisol peak measures the reactivity of the hypothalamic-pituitary-adrenal (HPA) axis in response to the waking challenge. Diurnal cortisol slope measures the pattern of cortisol production over the day. Cortisol AUCg provides information regarding total hormonal output, while cortisol AUCi provides information regarding reactivity of the system over the day (Vedhara et al., 2005). In December 1999, the MacArthur Research Network on SES and Health convened a meeting at Rockefeller University with the purpose of examining the empirical support for the various measurements of cortisol production. While no one measure of cortisol was identified as the gold-standard, cortisol AUC was identified as “a promising measure most notably in establishing a link between cortisol levels and psychological functioning” (Stewart & Seeman, 2000). Thus, cortisol AUC was chosen as the cortisol measure for this study. In regard to AUCi versus AUCg, the current study utilized cortisol AUCi, as it

represents the reactivity of the system, which is more likely to be associated with the recent ambivalent social support from a husband/partner that is the predictor variable in this study. Pruessner and colleagues (2003) provide a formula for computed cortisol AUCi (Equation 2-2)

$$AUC_I = \left(\sum_{i=1}^{n-1} \frac{(m_{(i+1)} + m_i) \cdot t_i}{2} \right) - \left(m_1 \cdot \sum_{i=1}^{n-1} t_i \right) \quad (2\text{-}2)$$

Analysis of Specific Aims

In order to examine the six specific aims and hypotheses outlined above, a path analysis was conducted using the variables ambivalent social support, VEGF, and psychological functioning pre and post-operatively. A second path analysis was conducted using the variables ambivalent social support, cortisol AUCi, and psychological functioning pre- and post-operatively. Each of the observed variables was entered into a path analysis model using Amos software (see Figure 2-2 and Figure 2-3). While each of the specific aims and associated hypotheses could have been evaluated independently using hierarchical linear regressions, for the purposes of this study we chose to use path analyses to test models created by combining our hypotheses rather than testing each hypothesis individually. However, if a model demonstrated poor fit, hierarchical linear regressions were used to examine individual hypotheses. Though not a focus of the current study, paths between psychological distress and cortisol as well as psychological distress and VEGF were specified in the models due to previous research demonstrating a link between psychological distress and these biological outcome variables (see Antoni et al., 2006).

Aim 1: To examine pre-surgical relationships between ambivalent social support from a husband/partner and psychological distress.

To examine support for Hypothesis 1 (i.e., women with more ambivalent social support from a husband/partner will report greater psychological distress [more anxious and depressive symptoms]), the path coefficient between pre-operative ambivalent social support and pre-operative psychological functioning was examined in each model. It was expected that these path coefficients would be significant and positively valenced, such that more ambivalent social support would be associated with greater psychological distress.

Aim 2: To examine pre-surgical relationships between ambivalent social support from a husband/partner and plasma VEGF levels.

To examine support for Hypothesis 2 (i.e., that women who report greater ambivalent social support from a husband/partner will have higher VEGF levels), the path coefficient between pre-operative ambivalent social support and pre-operative VEGF was examined (Figure 2-2). It was hypothesized that this path coefficient would be significant and positively valenced, such that greater ambivalent social support would be associated with higher VEGF levels.

Aim 3: To examine pre-surgical relationships between ambivalent social support from a husband/partner and cortisol levels.

To examine support for Hypothesis 3 (i.e., women who report greater ambivalent social support from a husband/partner will have higher cortisol levels), the path coefficient between pre-operative ambivalent social support and pre-operative cortisol was examined (Figure 2-3). It was hypothesized that this path coefficient would be

significant and positively valenced, such that greater ambivalent social support would be associated with higher cortisol AUCi.

Aim 4: To examine relationships between post-operative ambivalent social support from a husband/partner and post-operative psychological distress (anxiety and depressive symptoms).

To examine support for Hypothesis 4 (i.e., women who report greater post-operative ambivalent social support from a husband/partner over the perioperative period will report higher levels of anxiety and depressive symptoms post-operatively than women with lower post-operative ambivalent social support from a husband/partner), the path coefficient between post-operative ambivalent social support and post-operative psychological distress was examined in each model. It was expected that these path coefficients would be significant and positively valenced, such that more ambivalent social support would be associated with greater psychological distress.

Aim 5: To examine relationships between post-operative ambivalent social support from a husband/partner and post-operative VEGF levels.

To examine support for Hypothesis 5 (i.e., women with higher post-operative ambivalent social support from a husband/partner will demonstrate higher levels of post-operative VEGF), the path coefficient between post-operative ambivalent social support and post-operative VEGF was examined (Figure 2-2). It was expected that this path coefficient would be significant and positively valenced, such that greater ambivalent social support would be associated with higher VEGF levels.

Aim 6: To examine relationships between post-operative ambivalent social support from a husband/partner and post-operative cortisol levels.

To examine support for Hypothesis 6 (i.e., women who report higher levels of post-operative ambivalent social support from a husband/partner will demonstrate higher post-operative cortisol AUC than women who report less post-operative ambivalent social support), the path coefficient between post-operative ambivalent social support and post-operative cortisol was examined (Figure 2-3). It was hypothesized that this path coefficient would be significant and positively valenced, such that greater ambivalent social support would be associated with higher cortisol AUCi.

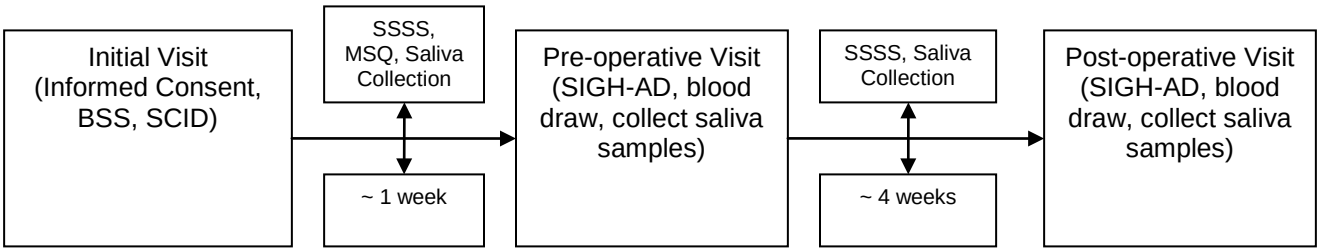

Figure 2-1. Study design

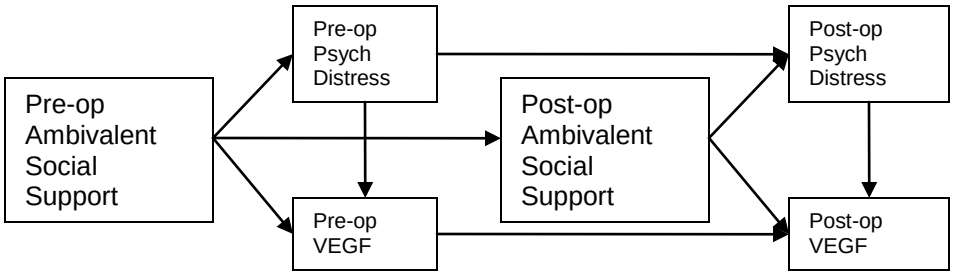

Figure 2-2. Path analysis model predicting psychological functioning and VEGF longitudinally.

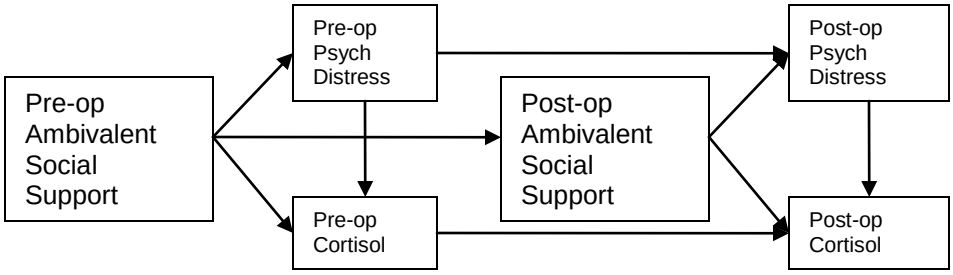

Figure 2-3. Path analysis model predicting psychological functioning and cortisol longitudinally.

CHAPTER 3
RESULTS

Participants

Participants for this study (*N* = 70) were drawn from the parent study if they reported receiving social support from a husband/partner. This sample included eight women who did not endorse “married” on the MSQ. Of these, two women reported that they were divorced, two reported they were widowed, two reported they were separated, and two reported that they were never married. However, each of these women reported having at least two adults in the house and/or completed the Dyadic Adjustment Scale, which also asks questions directly relating to a partner relationship. Excluding these women from analyses did not significantly alter the pattern of results. Results of independent samples t-tests and chi-square analyses demonstrated that the partnered women included in this study did not differ significantly from those excluded from the study in age, race/ethnicity, or education. There were also no significant differences between these groups in pre- or post-operative psychological distress, VEGF or cortisol AUCi. (*p*’s > .05). Demographic characteristics of the participants are shown in Table 1. Briefly, the women had a mean age of 60.5 years (*SD* = 9.6 years), the majority were Caucasian (90.0%), and had, on average, a high school education (*M* years of school = 13.6, *SD* = 2.4).

On average, women were enrolled in the study two and a half weeks following abnormal endometrial biopsy (*M* = 17.7, *SD* = 26.5 days). The majority of women were diagnosed with well-differentiated (60.0%), FIGO Stage I (65.7%), endometrial adenocarcinoma (82.9%), as determined by post-surgical tumor pathology results. A

full description of tumor characteristics of this sample can be found in Table 3-1. A list of sample sizes for each pre- and post-operative variable can be found in Table 3-2.

Descriptive Statistics

Biological Variables

VEGF

The initial distribution of VEGF levels at both the pre- and post-operative timepoints was non-normal, so pre-op VEGF was log-transformed and post-operative VEGF was square root-transformed in order to normalize the data and permit the use of parametric analyses. No outliers (defined as three standard deviations away from the mean) were identified in the VEGF data. VEGF data were available for 50 women at the pre-operative timepoint (M = 226.62, SD = 297.27 pg/ml). VEGF data were available for 28 women at the post-operative timepoint (M = 348.95, SD = 344.93 pg/ml). Results of t-tests demonstrated that there were no significant differences in mean pre- or post-operative ambivalent social support or psychological distress for women with and without pre- or post-operative VEGF data (ps > .05). See Table 3-3 for mean VEGF levels by tumor stage.

Cortisol

The distribution of both pre- and post-operative cortisol AUCi was initially non-normal, so cortisol AUCi was Blom-transformed in order to allow for the use of parametric analyses. No outliers were identified in the cortisol AUCi data. Cortisol AUCi data were available for 44 women at the pre-operative timepoint (M = 1.48, SD = 1.85) and for 30 women at the post-operative timepoint (M = 1.03, SD = 0.59). Results of t-tests demonstrated no significant differences in mean pre- or post-operative ambivalent social support or psychological distress for women with and without pre- or post-

operative cortisol AUCi data (*p*s > .05). See Table 3-4 for mean cortisol AUCi levels by tumor stage.

Psychosocial Variables

Social support

Ambivalent social support was calculated using Equation 2-1. See Table 3-5 for examples of ambivalence scores yielded by various emotional and negative social support combinations. The initial distribution of pre- and post-operative emotional, negative, and ambivalent social support from a husband/partner was non-normal. These scores were Blom-transformed in order to allow for the use of parametric statistics. Data on perceived social support from a husband/partner was available for 65 women at the pre-operative timepoint and for 44 women at the post-operative timepoint. See Table 3-6 for a summary of descriptive data of the study variables of interest. Results of *t*-tests demonstrated no significant differences in mean pre- or post-operative psychological distress, VEGF, or cortisol AUCi for women with and without pre-operative social support data (*p*s > .05). Results of *t*-tests for women with and without post-operative social support data showed no significant differences in psychological distress or VEGF. However, there were significant differences in post-operative cortisol AUCi scores, such that the three women who did not have post-operative social support scores but did have cortisol AUCi data had significantly higher mean post-operative cortisol AUCi (M = 1.36, SD = .69) than the 28 women who had both post-operative ambivalent social support and cortisol AUCi data (M = -.15, SD = .89, t (28) = 2.84, p = .008).

Psychological distress

The normal distribution of both pre- and post-operative psychological distress was confirmed using descriptive statistics. No outliers were identified in this data.

Psychological distress data were available for 66 women at the pre-operative timepoint (*M* = 11.44, *SD* = 7.99) and 47 women at the post-operative timepoint (*M* = 8.57, *SD* = 6.55). Results of *t*-tests demonstrated no significant differences in mean pre- or post-operative psychological distress, VEGF, or cortisol AUCi for women with and without pre- or post-operative psychological distress data (*p*s > .05).

Relationships Among Variables of Interest

Bivariate correlational analyses were conducted to explore relationships among the variables of interest. As expected, each pre-operative variable was significantly associated with its post-operative counterpart. Additionally, pre-operative emotional support was significantly and positively associated with pre-operative VEGF ($r = .29$, $p = .05$) and post-operative VEGF ($r = .51$, $p = .007$). Pre-operative negative support from a husband/partner was positively associated with pre-operative psychological distress ($r = .39$, $p = .002$), while post-operative negative support was negatively associated with post-operative cortisol AUCi ($r = -.37$, $p = .05$). Pre-operative ambivalent support from a husband/partner was positively related to pre-operative psychological distress ($r = .39$, $p = .002$) and negatively related to post-operative VEGF ($r = -.49$, $p = .01$). Please see Table 3-7 for a full list of the correlational relationships between study variables of interest.

Analyses of Specific Aims

VEGF Path Analysis Models

A path analysis model was created to examine the relationships between pre- and post-operative ambivalent social support, psychological distress, and VEGF. Results of the path analysis demonstrated that greater pre-operative ambivalent social support was significantly related to greater pre-operative psychological distress ($\beta = .40$,

$p < .001$). There were no significant relationships between pre- or post-operative ambivalent social support and pre- or post-operative VEGF. See Figure 3-1 and Table 3-8 for the full model.

Cortisol AUCi Path Analysis Model

A similar path analysis model was created, replacing VEGF with cortisol AUCi to examine the relationships between pre- and post-operative ambivalent social support from a husband/partner, psychological distress, and cortisol AUCi. Missing data was again accounted for by estimating means and intercepts. Results of the path analysis corroborated the significant relationship between pre-operative ambivalent social support and pre-operative psychological distress found in the VEGF model ($\beta = .39$, $p < .001$). Greater pre-operative ambivalent social support was also associated with greater post-operative cortisol AUCi ($\beta = .58$, $p = .002$). Conversely, less post-operative ambivalent social support was associated with greater post-operative cortisol AUCi ($\beta = -.42$, $p = .017$). See Figure 3-2 and Table 3-9 for the full model.

Analyses of Exploratory Aims

Path analysis models were created to examine relationships between pre- and post-operative emotional and negative social support from a husband/partner, psychological distress, and VEGF. For all models, missing data was accounted for by estimating means and intercepts.

First, a path analysis model was created to examine relationships between emotional support from a husband/partner, psychological distress, and VEGF. Results of this path analysis demonstrated that, as expected, each pre-operative variable was significantly related to its post-operative counterpart. Further, greater pre-operative emotional support from a husband/partner was associated with greater pre-operative

VEGF (β = .37, p = .011) and post-operative VEGF (β = .53, p = .030). See Figure 3-3 and Table 3-10 for the full model.

A second path analysis model was created to examine the relationships between negative support from a husband/partner, psychological distress, and VEGF. Results of this path analysis demonstrated that, again, each pre-operative variable was significantly associated with its post-operative counterpart. In this analysis, greater pre-operative negative support from a husband/partner was associated with greater pre-operative psychological distress (β = .39, p < .001). No other paths were significant. See Figure 3-4 and Table 3-11 for the full model.

Similar path analysis models were created, replacing VEGF with cortisol AUCi to examine the relationships between pre- and post-operative emotional and negative social support from a husband/partner, psychological distress, and cortisol AUCi. The first model created used emotional support as the social support variable. Results of this path analysis demonstrated that each pre-operative variable was significantly associated with its post-operative counterpart. However, no other significant relationships emerged in this path analysis model. See Figure 3-5 and Table 3-12 for the full model.

A second path analysis model was created replacing emotional support with negative support from a husband/partner. Results of this path analysis demonstrated that pre-operative negative support from a husband/partner was positively associated with pre-operative psychological distress (β = .39, p < .001). In addition, pre-operative negative social support was significantly related to post-operative cortisol AUCi, such that women who reported more pre-operative negative social support from a

husband/partner demonstrated higher post-operative cortisol AUCi (β = .43, p = .004). See Figure 3-6 and Table 3-13 for the full model.

Table 3-1. Demographic and health status characteristics of study participants.

Variable		No.	%	Mean	SD
Age				60.5	9.6
Race/Ethnicity					
	White (Non-Hispanic)	63	90.0		
	White, Hispanic	4	5.7		
	Black (Non-Hispanic)	3	4.3		
Yearly Household Income					
	0-24,999	13	18.6		
	25,000-49,999	18	25.7		
	50,000-99,999	17	24.3		
	100,000+	9	12.9		
	Not reported	13	18.6		
Education (years)				13.6	2.4
Tumor Grade					
	Benign	8	11.4		
	Well-differentiated	42	60.0		
	Moderately-differentiated	16	22.9		
	Poorly-differentiated	3	4.3		
	Not documented	1	1.4		
Tumor Stage					
	Benign	8	11.4		
	FIGO IA-C	46	65.7		
	FIGO IIA-B	9	12.9		
	FIGO IIIA-C	6	8.6		
	Not documented	1	1.4		
Tumor Histology					
	Benign	8	11.40		
	Endometrial adenocarcinoma	58	82.9		
	Clear cell endometrial carcinoma	3	4.3		

Variable		No.	%	Mean	SD
	Not documented	1	1.4		
Days between endometrial biopsy and study entry				17.70	26.5

Table 3-2. Sample size by study variable

Variable	Pre-op N	Post-op N
Ambivalent Social Support	65	44
Psychological Distress	66	47
VEGF	50	28
Cortisol AUCi	44	30

Table 3-3. Mean VEGF by FIGO tumor stage

FIGO Stage	Pre-op N	Mean Pre-op VEGF (pg/ml)	Post-op N	Mean Post-op VEGF (pg/ml)
Benign	4	195.82	2	193.00
1A-C	35	181.18	22	311.26
2A-B	7	412.08	3	706.66
3A-C	4	330.50	1	417.00

Table 3-4. Mean cortisol AUCi by FIGO tumor stage

FIGO Stage	Pre-op N	Mean Pre-op Cortisol AUCi (ug/dL)	Post-op N	Mean Post-op Cortisol AUCi (ug/dL)
Benign	5	1.18	4	0.75
1A-C	29	1.67	22	1.06
2A-B	7	1.15	4	1.12
3A-C	3	0.84	0	-

Table 3-5. Examples of emotional, negative, and ambivalent social support combinations

Emotional Social Support	Negative Social Support	Ambivalent Social Support
20	4	-4
20	5	-2
15	5	0
14	6	2
10	6	4
16	10	7

Table 3-6. Descriptive statistics of study variables of interest

Variable	*M*	*SD*
Pre-operative Emotional Support	16.29	3.84
Post-operative Emotional Support	16.43	4.53
Pre-operative Negative Support	5.18	1.80
Post-operative Negative Support	5.00	1.87
Pre-operative Ambivalent Support	-0.46	3.64
Post-operative Ambivalent Support	-0.90	3.36
Pre-operative Psychological Distress	11.44	7.99
Post-operative Psychological Distress	8.57	6.55
Pre-operative VEGF (pg/ml)	226.62	297.27
Post-operative VEGF (pg/ml)	348.95	344.93
Pre-operative Cortisol AUCi (ug/dL)	1.48	1.85
Post-operative Cortisol AUCi (ug/dL)	1.03	0.59

Table 3-7. Correlations between study variables of interest

Variable	1	2	3	4	5	6	7	8	9	10	11	12
1. Pre-operative Emotional Support	1											
2. Post-operative Emotional Support	.71**	1										
3. Pre-operative Negative Support	-.45**	-.35*	1									
4. Post-operative Negative Support	-.37*	-.30	.38*	1								
5. Pre-operative Ambivalent Support	-.81**	-.58**	.85**	.42**	1							
6. Post-operative Ambivalent Support	-.70**	-.85**	.43**	.73**	.67**	1						
7. Pre-operative Psychological Distress	-.21	-.24	.39**	.11	.39**	.27	1					
8. Post-operative Psychological Distress	-.13	-.20	.15	.03	.17	.18	.47**	1				
9. Pre-operative VEGF	.29*	.07	-.10	.04	-.20	-.03	.08	-.32	1			
10. Post-operative VEGF	.51**	.27	-.32	-.13	-.49*	-.28	-.07	-.19	.67**	1		
11. Pre-operative Cortisol AUCi	.13	-.21	-.07	-.19	-.10	.07	.14	-.21	.31	.19	1	
12. Post-operative Cortisol AUCi	.00	-.07	.15	-.37*	.08	-.10	.22	-.12	.04	.13	.72**	1

*$p < .05$, **$p < .01$

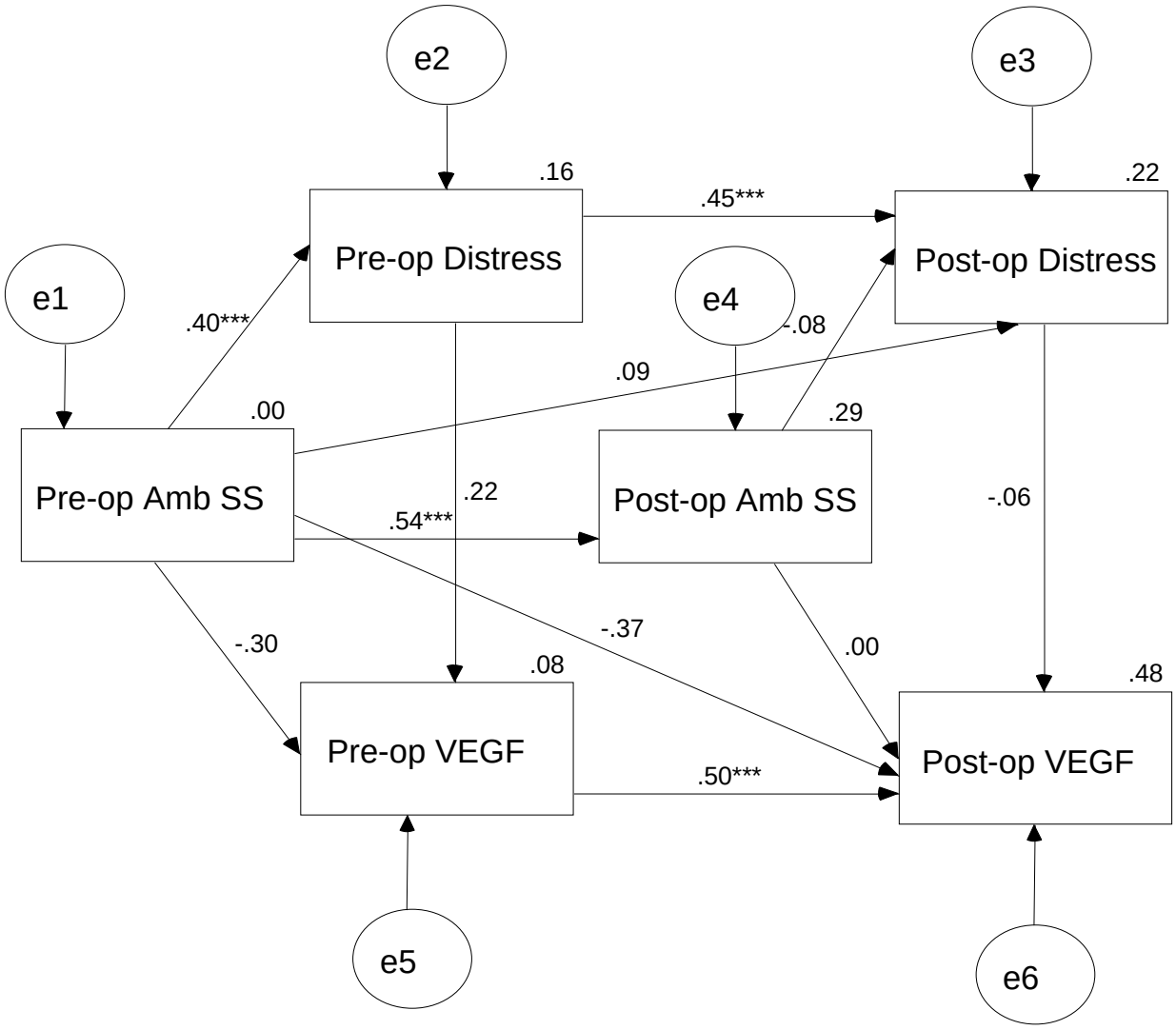

Figure 3-1. Ambivalent social support, psychological distress, and VEGF path analysis

Table 3-8. Ambivalent social support, psychological distress, and VEGF path analysis

Variable 1	Variable 2	r^2	B	S.E.	B
Pre-op ambivalent support		0.00			
	Pre-op psychological distress		0.87	0.25	0.40***
	Pre-op VEGF		-0.08	0.05	-0.30
	Post-op ambivalent support		0.49	0.11	0.54***
	Post-op psychological distress		-1.00	0.66	0.09
	Post-op VEGF		0.00	0.60	-0.37
Pre-op psychological distress		0.16			
	Pre-op VEGF		0.03	0.02	0.23
	Post-op psychological distress		0.37	0.11	0.45***
Pre-op VEGF		0.09			
	Post-op VEGF		4.78	1.31	0.50***
Post-op ambivalent support		0.29			
	Post-op psychological distress		-0.16	0.39	-0.08
	Post-op VEGF		0.00	0.60	0.00
Post-op psychological distress		0.22			
	Post-op VEGF		-0.09	0.21	-0.06
Post-op VEGF		0.48			

*$p < .05$, **$p < .01$, ***$p < .001$

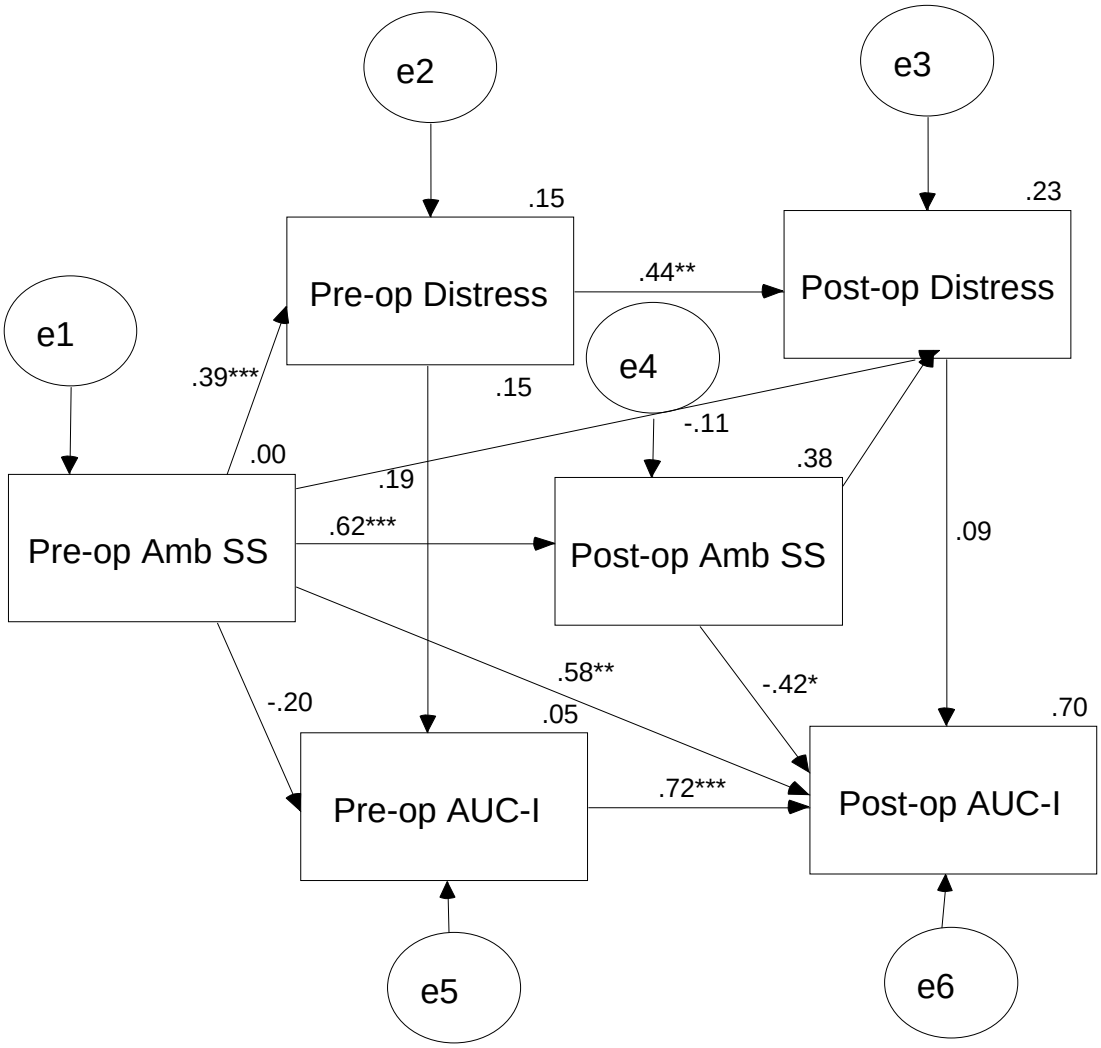

Figure 3-2. Ambivalent social support, psychological distress, and cortisol AUCi path analysis

Table 3-9. Ambivalent social support, psychological distress, and cortisol AUCi path analysis

Variable 1	Variable 2	r^2	B	S.E.	β
Pre-op ambivalent support		0.00			
	Pre-op psychological distress		3.45	1.00	0.39***
	Pre-op cortisol AUCi		-0.21	0.17	-0.20
	Post-op ambivalent support		0.60	0.12	0.62***
	Post-op psychological distress		1.05	1.58	0.15
	Post-op cortisol AUCi		0.67	0.22	0.58**
Pre-op psychological distress		0.16			
	Pre-op cortisol AUCi		0.02	0.02	0.19
	Post-op psychological distress		0.36	0.11	0.44***
Pre-op cortisol AUCi		0.05			
	Post-op cortisol AUCi		0.78	0.12	-0.72***
Post-op ambivalent support		0.38			
	Post-op psychological distress		-0.85	1.59	-0.11
	Post-op cortisol AUCi		-0.50	0.21	-0.42*
Post-op psychological distress		0.23			
	Post-op cortisol AUCi		0.01	0.02	0.09
Post-op cortisol AUCi		0.70			

*$p < .05$, **$p < .01$, ***$p < .001$

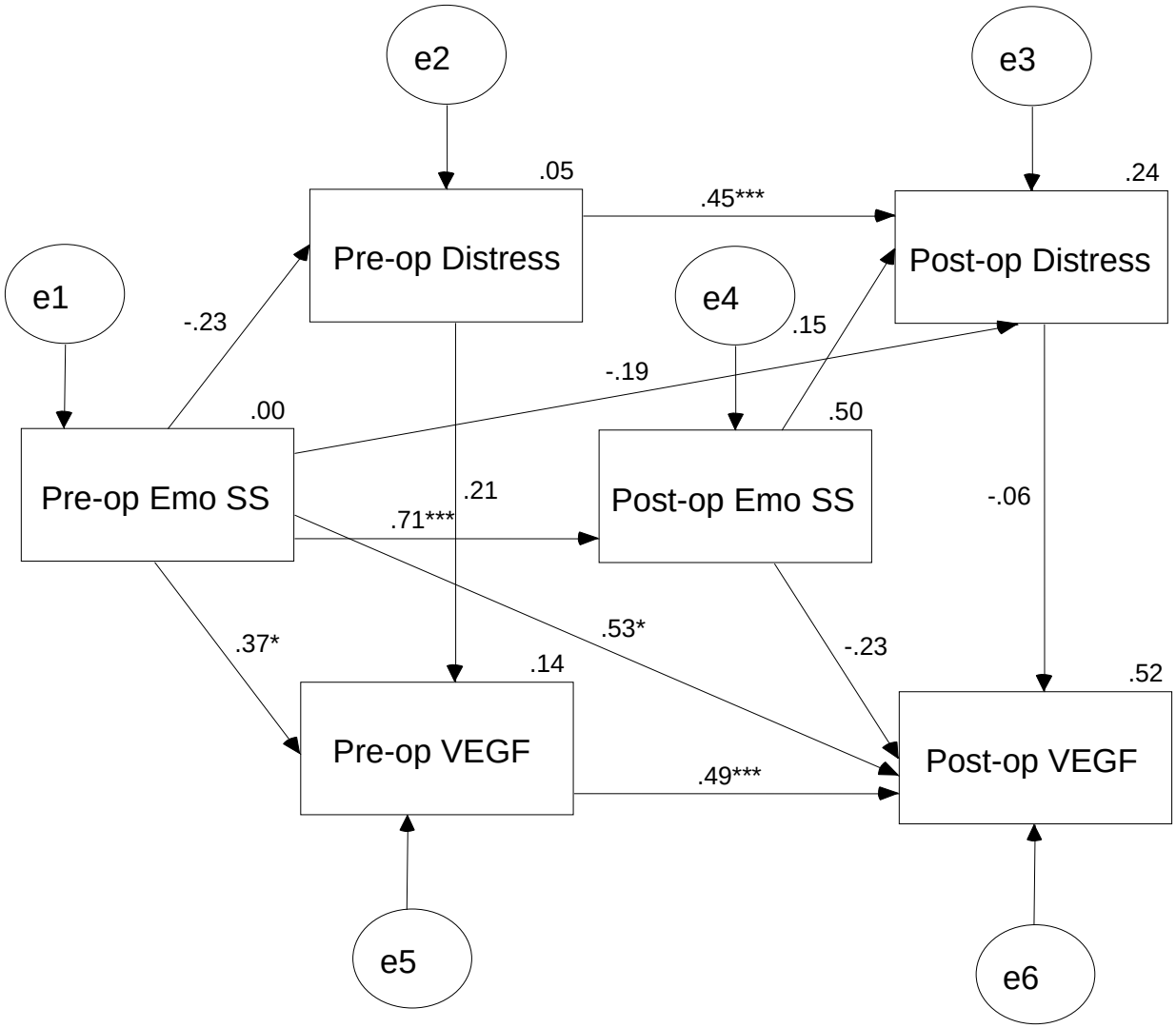

Figure 3-3. Emotional social support, psychological distress, and VEGF path analysis

Table 3-10. Emotional social support, psychological distress, and VEGF path analysis

Variable 1	Variable 2	r^2	B	S.E.	β
Pre-op emotional support		0.00			
	Pre-op psychological distress		-2.01	1.09	-0.23
	Pre-op VEGF		0.42	0.16	0.37*
	Post-op emotional support		0.69	0.11	0.71***
	Post-op psychological distress		-1.38	1.43	-0.19
	Post-op VEGF		5.76	2.65	0.53*
Pre-op psychological distress		0.05			
	Pre-op VEGF		0.03	0.02	0.21
	Post-op psychological distress		0.38	0.11	0.45***
Pre-op VEGF		0.14			
	Post-op VEGF		4.65	1.24	0.49***
Post-op emotional support		0.50			
	Post-op psychological distress		1.14	1.56	0.15
	Post-op VEGF		-2.61	2.68	-0.24
Post-op psychological distress		0.24			
	Post-op VEGF		-0.08	0.20	-0.06
Post-op VEGF		0.52			

*$p < .05$, **$p < .01$, ***$p < .001$

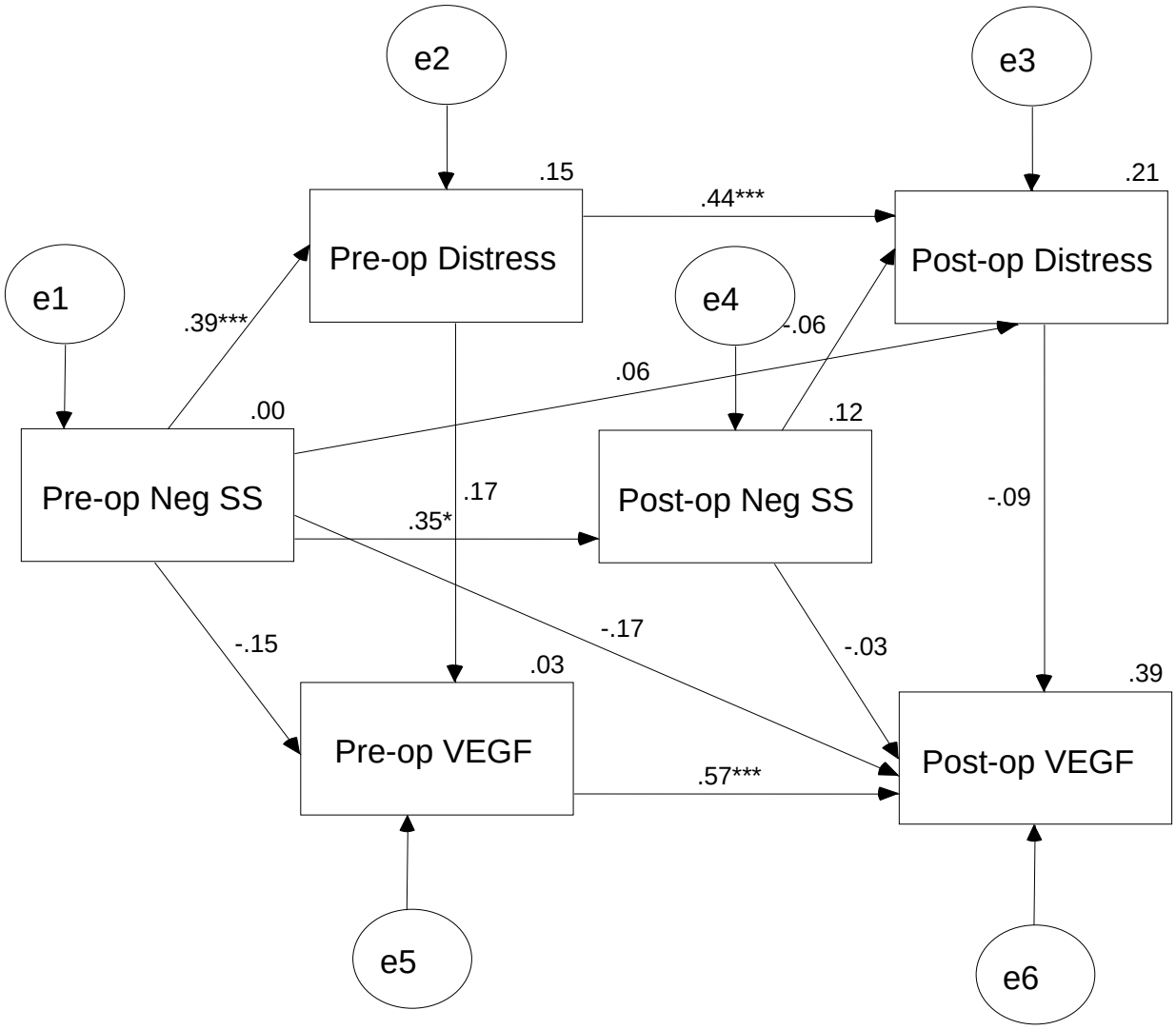

Figure 3-4. Negative social support, psychological distress, and VEGF path analysis

Table 3-11. Negative social support, psychological distress, and VEGF path analysis

Variable 1	Variable 2	r^2	B	S.E.	β
Pre-op negative support		0.00			
	Pre-op psychological distress		3.81	1.12	0.39***
	Pre-op VEGF		-0.18	0.20	-0.15
	Post-op negative support		0.38	0.15	0.35*
	Post-op psychological distress		0.44	1.25	0.06
	Post-op VEGF		-2.00	2.93	-0.17
Pre-op psychological distress		0.15			
	Pre-op VEGF		0.02	0.02	0.17
	Post-op psychological distress		0.36	0.11	0.44***
Pre-op VEGF		0.03			
	Post-op VEGF		5.36	1.35	0.57***
Post-op negative support		0.12			
	Post-op psychological distress		-0.42	1.11	-0.06
	Post-op VEGF		-0.28	2.53	-0.03
Post-op psychological distress		0.21			
	Post-op VEGF		-0.13	0.23	-0.09
Post-op VEGF		0.39			

*$p < .05$, **$p < .01$, ***$p < .001$

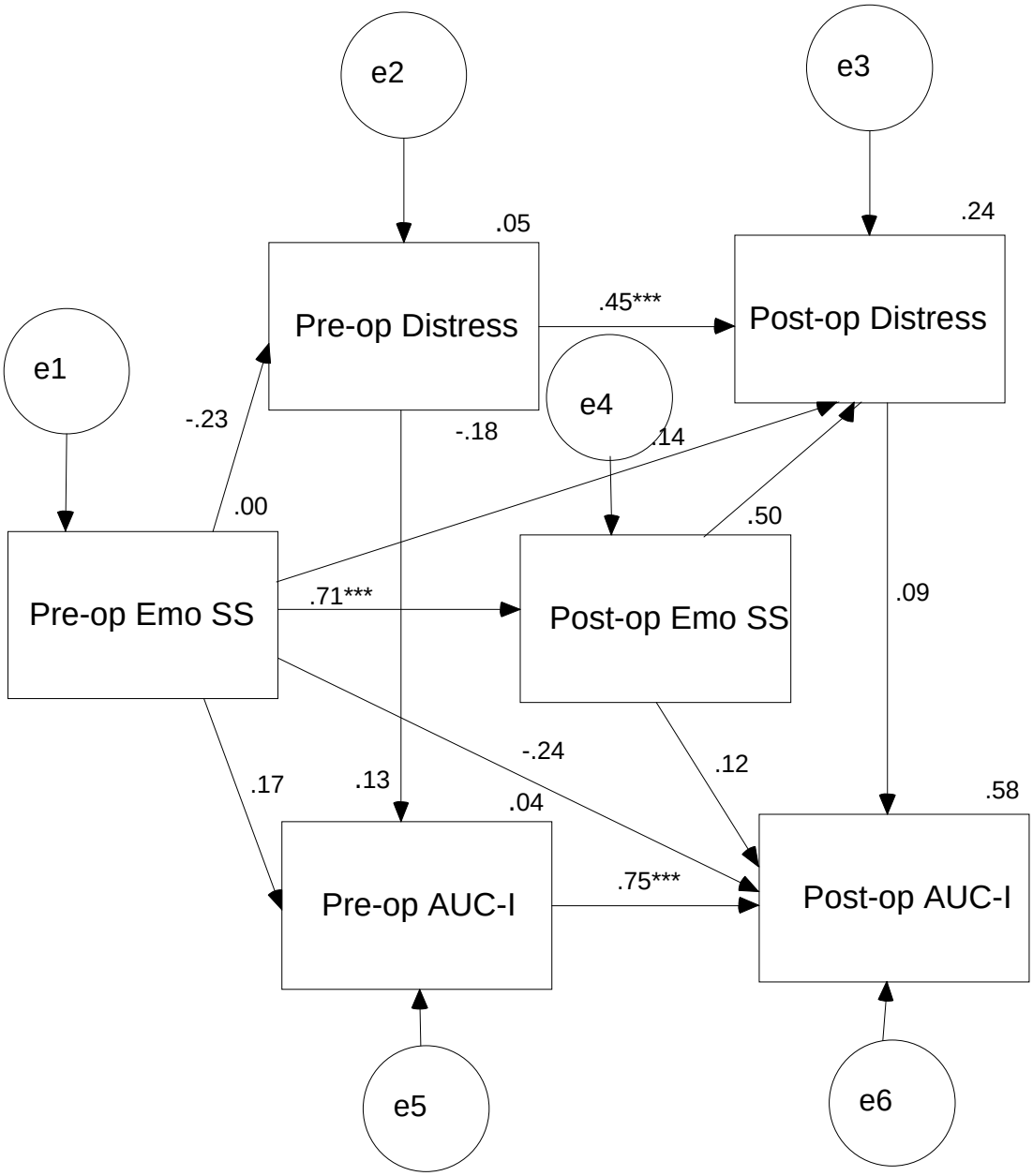

Figure 3-5. Emotional social support, psychological distress, and cortisol AUCi path analysis

Table 3-12. Emotional social support, psychological distress, and cortisol AUCi path analysis

Variable 1	Variable 2	r^2	B	S.E.	β
Pre-op emotional support		0.00			
	Pre-op psychological distress		-2.01	1.09	-0.23
	Pre-op cortisol AUCi		0.19	0.18	0.17
	Post-op emotional support		0.69	0.11	0.71***
	Post-op psychological distress		-1.32	1.43	-0.18
	Post-op cortisol AUCi		-0.26	0.24	-0.24
Pre-op psychological distress		0.05			
	Pre-op cortisol AUCi		0.02	0.02	0.13
	Post-op psychological distress		0.37	0.11	0.45***
Pre-op cortisol AUCi		0.04			
	Post-op cortisol AUCi		0.78	0.14	0.75***
Post-op emotional support		0.50			
	Post-op psychological distress		1.07	1.57	0.14
	Post-op cortisol AUCi		0.14	0.23	0.12
Post-op psychological distress		0.24			
	Post-op cortisol AUCi		0.01	0.02	0.09
Post-op cortisol AUCi		0.58			

*$p < .05$, **$p < .01$, ***$p < .00$

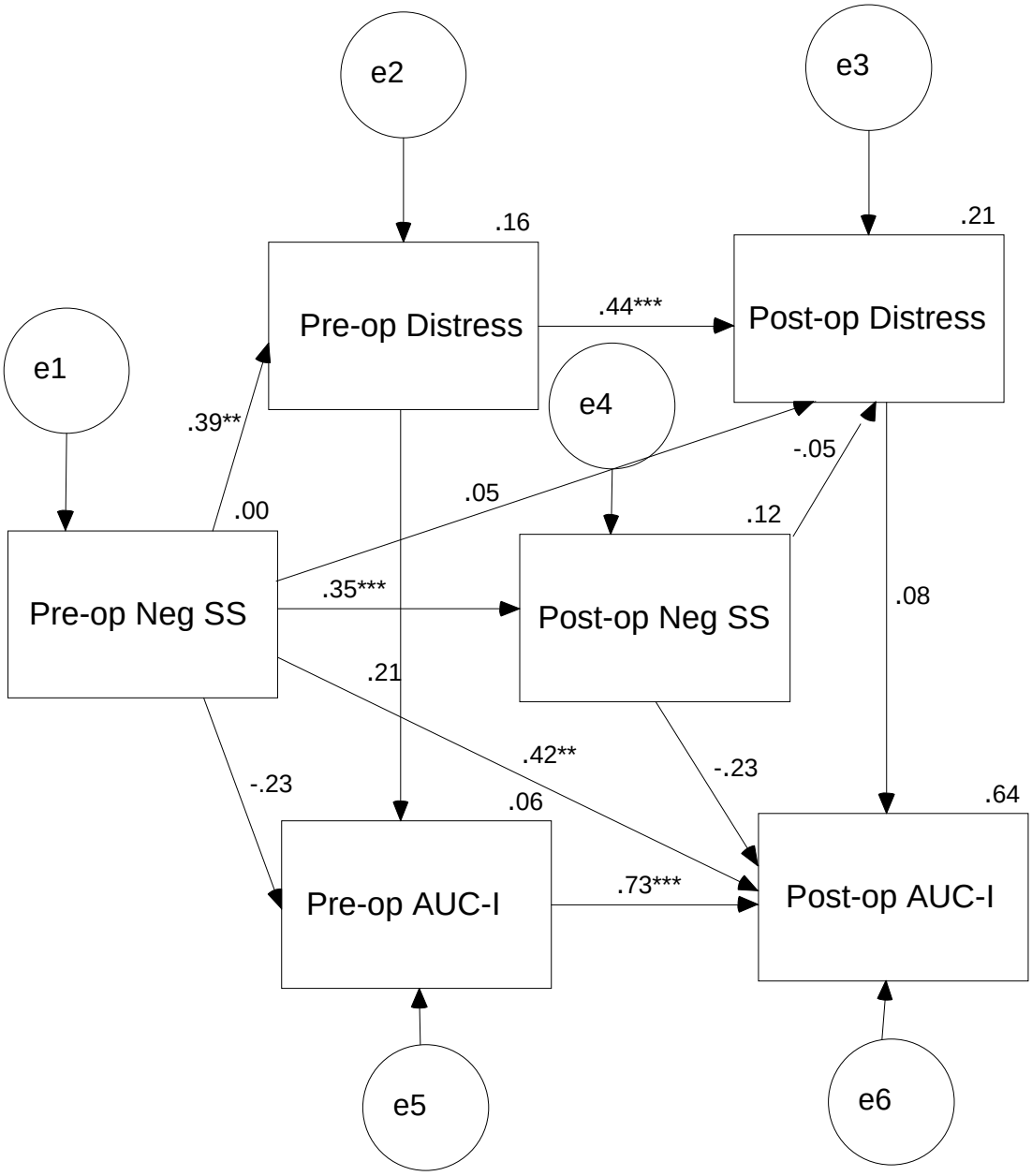

Figure 3-6. Negative social support, psychological distress, and cortisol AUCi path analysis

Table 3-13. Negative social support, psychological distress, and cortisol AUCi path analysis

Variable 1	Variable 2	r^2	B	S.E.	β
Pre-op negative support		0.00			
	Pre-op psychological distress		3.83	1.12	0.39***
	Pre-op cortisol AUCi		-0.28	0.21	-0.23
	Post-op negative support		0.38	0.15	0.35**
	Post-op psychological distress		0.43	1.25	0.06
	Post-op cortisol AUCi		0.49	0.17	0.43**
Pre-op psychological distress		0.16			
	Pre-op cortisol AUCi		0.03	0.02	0.21
	Post-op psychological distress		0.36	0.11	0.44***
Pre-op cortisol AUCi		0.06			
	Post-op cortisol AUCi		0.70	0.13	0.73***
Post-op negative support		0.12			
	Post-op psychological distress		-0.36	1.11	-0.05
	Post-op cortisol AUCi		-0.25	0.16	-0.24
Post-op psychological distress		0.21			
	Post-op cortisol AUCi		0.01	0.02	0.08
Post-op cortisol AUCi		0.64			

*$p < .05$, **$p < .01$, ***$p < .001$

CHAPTER 4
DISCUSSION

The current study is among the first to examine psychoneuroimmunologic relationships with ambivalent social support in a sample of endometrial cancer patients, a population with which little previous psychoneuroimmunologic research has been conducted. This study examined these relationships longitudinally during the perioperative period. The primary hypotheses were that women who reported more ambivalent support from a husband/partner would report higher levels of psychological distress and would have higher cortisol AUCi as well as higher levels of VEGF both pre- and post-operatively. Though these hypotheses were not entirely supported by study findings, the results that emerged provide a foundation for beginning to understand psychoneuroimmunologic relations in women with endometrial cancer, a relatively understudied group of women with cancer.

Ambivalent Social Support and Psychological Distress

Social relationships are characterized by both positive and negative interactions. Taken together, the relative balance of positive and negative support provided by a given relationship is the ambivalent social support in that relationship. Very little research attention has been paid to potential relationships between ambivalent social support and psychological functioning, despite the wealth of literature examining positive social support and psychological functioning and the growing literature examining negative social support and psychological functioning. However, one early study suggested that relationships that were characterized by high levels of ambivalence were related to poorer psychological functioning than relationships that were described as primarily “helpful” or “unhelpful” (Pagel et al.,1987). Results of the

current study corroborated the negative relationship between ambivalent support and psychological functioning found in prior research, in that prior to surgery, women who reported more ambivalent support from their husband/partner reported higher levels of psychological distress. However, this relationship did not emerge following surgery. Specifically, while greater post-operative ambivalent social support was associated with greater post-operative psychological distress, the relationship was not statistically significant. Of note, while the reported ambivalence from a husband/partner did not significantly differ from pre-operative to post-operative timepoints, women reported significantly less psychological distress at the post-operative timepoint. Thus it is possible that an additional factor, such as stress related to the impending surgery, moderates the relationship between ambivalent social support and psychological distress. For instance, the relationship between ambivalent social support and psychological distress may only reach significance when the individual is experiencing high levels of stress.

Ambivalent Social Support and VEGF

Previous research has demonstrated relationships between psychosocial variables and VEGF in both *in vitro* and *in vivo* studies. For example, in a sample of ovarian cancer patients, positive social support was associated with lower levels of VEGF prior to undergoing surgery (Lutgendorf et al., 2002). No previous published research has examined the relationships between negative or ambivalent support and VEGF. In the current study, it was hypothesized that ambivalent social support would be associated with higher levels of VEGF both pre- and post-operatively, based upon research showing that psychosocial factors such as stress and depression are related to poorer psychoneuroimmunologic outcomes in cancer populations (see Antoni et al.,

2006 for a review). However, this hypothesis was not supported by the results of the current study, as pre- and post-operative ambivalent social support were unrelated to pre- and post-operative VEGF, respectively. This lack of a relationship could have several explanations. First, there may be no relationship between ambivalent social support and VEGF levels in this population. However, it could also be that the measure used to assess ambivalent social support was not sensitive enough to measure ambivalence to the degree that would be necessary to detect relationships with VEGF. Further, the measure assessed ambivalent social support during the cancer experience, which for most women had begun within weeks of the pre-surgical assessment timepoint. It is possible that more chronic, long term ambivalent social support in a marital relationship is associated with VEGF levels in women undergoing surgery for suspected endometrial cancer; however, this possibility could not be examined in the current study given that ambivalent social support was anchored to the cancer experience.

Ambivalent Social Support and Cortisol

Cortisol has been a variable of interest in previous psychoneuroimmunologic research because of its established relationships with both psychosocial factors and immune functioning (see Antoni et al., 2006). In studies with metastatic breast cancer patients, abnormal cortisol slopes have been associated with earlier mortality (Sephton et al., 2000) and more social support has been associated with lower cortisol concentrations (Turner-Cobb et al., 2000). No previous published research has investigated potential relationships between ambivalent social support and cortisol levels.

The current study hypothesized that greater ambivalent social support from a husband/partner both pre- and post-operatively would be associated with higher cortisol AUCi levels. This hypothesis was not fully supported by the results of the study. Pre-operatively, there was no significant relationship between ambivalent social support and cortisol AUCi. However, post-operatively, there was a significant relationship between greater ambivalent social support and lower cortisol AUCi, a finding that was in the opposite direction of what was hypothesized. Notably, the relationship between pre-operative ambivalent social support and post-operative cortisol AUCi was significant and in the expected direction, such that greater pre-operative ambivalent social support was associated with greater post-operative cortisol AUCi. One possible explanation for these contradictory findings is the impact of missing data on the analyses. As was described previously, three participants had complete post-operative cortisol AUCi data but did not provide post-operative ambivalent social support data. These three participants had significantly higher mean cortisol AUCi scores than women with complete post-operative cortisol AUCi and ambivalent social support data. It is possible that these participants may have had a high level of post-operative ambivalent social support, and that study findings may have been in the hypothesized direction with the inclusion of these data. Regardless, this possibility highlights the potential for unstable findings with the modest sample size included in the current study. Additionally, the positive relationship between ambivalent social support reported prior to surgery and cortisol AUCi levels following surgery may indicate that there is a time lag between the experience of ambivalence in the marital relationship in the context of cancer and its subsequent relationship with cortisol levels. Cortisol AUCi was chosen as the cortisol

measure of choice in this study as it is representative of the reactivity of the system to current or recent stressors; however, the timing of the measurements may not have adequately captured any time lags in relationships between ambivalent social support and cortisol in this sample. That is, while greater ambivalence from a husband/partner prior to surgery may not be associated immediately with greater cortisol levels, it may be associated with increasing cortisol levels over the course of the perioperative period.

Emotional and Negative Support and Psychological Distress

Exploratory analyses in this study examined models similar to those used to examine the specific aims of the study; however, in these exploratory models ambivalent social support was replaced by (1) emotional social support and (2) negative social support from a husband/partner. In these models, emotional social support from a husband/partner was not significantly associated with psychological distress. Pre-operative negative social support from a husband/partner was, as would be expected, associated with greater pre-operative psychological distress. Post-operative emotional and negative social support from a husband/partner were not associated with post-operative psychological distress. Future research should examine whether the relationships between ambivalent, emotional, and negative social support from a husband/partner during the pre-operative period are moderated by stress levels in these women. For instance, it is possible that the relationship between social support and distress is stronger for women with high health-related stress.

Emotional and Negative Support and VEGF

Exploratory analyses also examined relationships between emotional and negative support from a husband/partner and VEGF levels during the perioperative period. Based upon previous psychoneuroimmunologic research that has demonstrated

an inverse relationship between social support and VEGF in ovarian cancer patients prior to undergoing surgery (Lutgendorf et al., 2002), it was expected that an inverse relationship would exist between emotional social support from a husband/partner and VEGF in this sample. However, the results of this study did not support this; rather, women who reported higher levels of emotional support from a husband/partner prior to surgery had higher levels of VEGF at both the pre- and post-operative timepoints. This may be reflective of the influence of a mediator or moderator variable, such as stress or psychological functioning, on the relationship between emotional social support and VEGF. For instance, both receipt of emotional support and greater VEGF may occur in conjunction with high levels of anticipatory stress about the surgery, long term mental health problems (e.g., trait anxiety), or characterological traits.

No previous research has examined the relationship between negative social support and VEGF. Based upon studies demonstrating that (a) stress-related mediators increase VEGF production from ovarian cancer cell lines (Lutgendorf et al., 2003) and (b) negative social support is associated with increased mortality in bone marrow transplant patients (Frick et al., 2005), it was expected that negative support from a husband/partner would be associated with higher levels of VEGF. However, there were no significant relationships between negative support and VEGF in this study. This may be due to a true lack of relationship between negative social support and VEGF in this population, which may be supported by the small effect sizes demonstrated between negative support from a husband/partner and VEGF over the course of the perioperative period. However, it should also be noted that the there was a lack of variability in negative social support reported by women in this sample, with many

women reporting they received no negative social support from their husband partner in the context of the cancer experience. Thus, if relationships exist between negative social support and VEGF, it may be better detected with a more thorough assessment of negative social support in the broader context of the marital relationship.

Emotional and Negative Support and Cortisol

Based on previous research that has demonstrated that social support is associated with lower cortisol concentrations in metastatic breast cancer patients (Turner-Cobb et al., 2000), it was expected that emotional support from a husband/partner would be associated with lower cortisol AUCi in this study. Contrary to this, however, emotional support from a husband/partner was unrelated to cortisol AUCi both pre- and post-operatively. This unexpected finding could be indicative of a true lack of relationship between emotional social support from a husband/partner and cortisol AUCi in this sample. However, there is previous research demonstrating that social support buffers the effect of stress on cortisol (see Antoni et al., 2006), so while there does not appear to be a direct relationship between social support and cortisol AUCi in this sample, it may be the case that for women with high levels of pre-surgical stress, social support buffers the impact of that stress on cortisol levels. This should be examined in future studies examining psychoneuroimmunologic relationships in women undergoing surgery for suspected endometrial cancer.

Cortisol is a stress hormone, and conceptualizing negative social support as a stressor, it was expected that negative social support from a husband/partner would be associated with greater cortisol AUCi in this study. Again, contrary to what was expected, pre-operative negative support from a husband/partner was unrelated to pre-operative cortisol AUCi. This may represent a true lack of relationship between negative

support and cortisol AUCi, or as discussed above, this null finding may be a result of the lack of variability in negative social support reported by the women in this study. It may be that a more thorough assessment of negative support in the broader context of the marital relationship, instead of confined to the cancer experience, would illuminate relationships between negative social support and cortisol in this population. While pre-operative negative support from a husband/partner was unrelated to pre-operative cortisol AUCi, it was related to post-operative cortisol AUCi, such that women who reported greater negative support from a husband/partner prior to surgery had higher levels of post-operative cortisol AUCi following surgery. As was discussed above in regarding to ambivalent social support and cortisol AUCi, this relationship may be indicative of a time lag between the experience of ambivalence in the marital relationship in the context of cancer and its subsequent relationship with cortisol levels. Post-operative negative support from a husband/partner was unrelated to post-operative cortisol AUCi.

Implications of Findings

Although some of the results of this study were unexpected, taken as a whole the results of this study offers several important directions for future research. One important finding in this study was that women who perceived more ambivalent support from their husband/partner during the pre-operative period experienced more psychological distress during that period. Similarly, women who reported higher levels of negative support from their husband/partner during that period also experienced higher levels of psychological distress. However, emotional support was unrelated to psychological distress, suggesting that negative and ambivalent support may have detrimental effects on psychological functioning prior to surgery, while emotional

support from a husband/partner may not have parallel, positive effects on psychological functioning. Future research examining psychological functioning and marital support should focus on the mechanisms driving the relationship between negative/ambivalent support and psychological distress and begin to investigate whether there are protective factors that could be bolstered by psychosocial interventions during this time period in order to reduce psychological distress prior to surgery.

Interestingly, no significant relationships emerged between pre- and post-operative ambivalent or negative social support from a husband/partner and pre- or post-operative VEGF. Unexpectedly, emotional support from a husband/partner prior to surgery was related to greater pre- and post-operative VEGF. Therefore, women in this study who reported greater levels of emotional support from their husband/partner had greater levels of a pro-angiogenic cytokine, which would promote the development of vasculature to tumors and may in turn lead to poorer cancer outcomes. The mechanisms underlying this relationship were not illuminated in this study; however, identifying psychosocial predictors of VEGF in these women could lead to psychosocial screenings that could identify women at risk for experiencing higher levels of pro-angiogenic cytokines prior to and following gynecologic cancer surgery. Further, psychosocial interventions could be designed to bolster psychosocial factors predictive of increased VEGF in this population. However, prior to the development of psychosocial screenings/interventions, future studies should be designed to replicate these surprising findings in order to validate the relationship between emotional support and VEGF in this population. Additionally, studies should examine potential

psychosocial factors, such as stress, that may mediate or moderate relationships between marital support and VEGF levels in this population.

Findings of this study demonstrated few significant relationships between marital support and cortisol AUCi. Unexpectedly, it was found that while pre-operative ambivalent support from a husband/partner was associated with greater post-operative cortisol AUCi, greater post-operative ambivalent support and greater negative support were associated with lower post-operative AUCi. This may have been driven by missing social support data from women with the most ambivalent or negative social support at the post-operative timepoint. Therefore, future studies should seek to increase completion of all study measures to reduce the amount of missing data that may impact study findings. Further, it is possible that stress, a psychological variable that has consistently been associated with greater cortisol output (see Antoni et al., 2006), may interact with social support to influence cortisol functioning. Once again, future research should investigate stress and other potential psychosocial confounding variables that may be mediate or moderate relationships between marital support and cortisol levels in women undergoing surgery for suspected endometrial cancer.

Study Limitations

While the study contributes to the current psychoneuroimmunologic and psycho-oncology literature, there are several notable limitations. While the models created in this study were longitudinal in design, there are numerous psychosocial and medical/biological variables that may have intervened, which preclude the ability to determine whether the psychosocial factors of interest cause changes in VEGF and cortisol. Future studies should include additional potential confounding factors that may

impact the likely complex and multifactorial psychoneuroimmunologic relationships in this population

This study was successful in recruiting ample participants, a challenging endeavor given the stressful nature of the cancer experience during which participants were approached. However, another notable limitation in this study was the missing data across study variables. While statistical considerations for missing data were included in the path analysis models in this study, it is possible that data in this study were not missing at random, and that women with higher levels of ambivalent or negative support or psychological distress were less likely to complete all study measures or study measures as post-surgery. In fact, there were fewer significant relationships at the post-operative timepoint than at the pre-operative timepoint, which may be partially due to a larger amount of missing data at the post-operative compared to the pre-operative timepoint. Important relationships between study variables may have been obscured by missing data in the study, and smaller than projected sample sizes in some of the analyses (e.g. individual regressions) may have yielded insufficient power to detect significant relationships in this study. Several strategies were utilized in this study to reduce missing data, including reminder calls to participants about completing and returning study measures, visits by study personnel to participants in the hospital to collect study measures, and thank you cards sent during participation in the study to remind participants of their study enrollment during the time between the pre- and post-operative measurement points. However, future studies should employ additional strategies to reduce the amount of missing data to increase the statistical power.

The measurement of the study variables of interest may have been an additional limitation of the current study. The social support measure used in this study was not specifically designed to measure ambivalent social support. Instead, ambivalent support was calculated by combining the emotional and negative support scales on a social support scale that has previously been used in research with medical populations (Carver, 2006). Further, the lack of variability in negative social support from a husband/partner specific to the cancer experience reported in this study may have contributed to null findings. The focus on support specific to the cancer experience may have obscured important relationships between generalized negative or ambivalent support in the marital relationship that may impact distress, cortisol, and VEGF in this population. Future research should seek to utilize a measure that specifically measures the amount of ambivalent support present in a marital relationship and the impact of that ambivalence on variables of interest in this population during the perioperative period.

The collection and analyses of cortisol and VEGF in this study may also pose limitations. The women in this study were asked to collect saliva at 8:00 a.m., 12:00 p.m., 5:00 p.m., and 9:00 p.m., which is consistent with previous studies with cancer patients utilizing cortisol as an outcome measure (e.g. Turner-Cobb et al., 2000). In order to ensure accurate calculation of cortisol AUCi levels in this sample, women were asked to record the actual time they took their samples on the salivettes, even if these times deviated from the designated times. Many women did so, and cortisol AUCi was calculated based upon recorded times. However, demand characteristics in this study may have led some women to report taking samples at the requested times instead of actual times, leading to inaccurate calculation of cortisol AUCi. Future studies should

consider utilizing devices that monitor compliance with cortisol collection procedures. In regard to VEGF, the blood samples that were collected in order to measure VEGF levels in this study were analyzed in batches, as there were more samples than could be analyzed on a single ELISA plate. In order to reduce within-subject variance, the pre- and post-operative samples from each individual participant were analyzed in the same batch. However, systematic differences in measurements between the batches may have led to between-subject variance that was not accounted for in the current study. While there is no way to avoid using different ELISA plates given the number of participants in this study, future research should use plates that are ordered at the same time, from the same manufacturer, and analyzed by the same investigator at approximately the same time to avoid any variation that may occur due to differences in these factors.

Conclusions

The present study is among a very few that have examined the relations among ambivalent social support, psychological outcomes, and physiological outcomes. Furthermore, it is among the first to examine these relationships in a cancer or surgical population. In this way, the current study extends the existing literature and contributes to the existing psychoneuroimmunologic and psycho-oncology literature bases.

The findings demonstrate that ambivalent social support from a husband/partner during the pre-operative period is associated with greater pre-operative psychological distress and greater post-operative cortisol AUCi, while greater ambivalent social support during the post-operative period was associated with less post-operative cortisol AUCi in women undergoing surgery for suspected endometrial cancer. Contrary to hypotheses, ambivalent social support was unrelated to VEGF in this sample in the

perioperative period. Results of exploratory analyses in this study demonstrated that (a) negative support from a husband/partner prior to surgery was related to greater pre-operative psychological distress, (b) pre-operative emotional support from a husband/partner was related to greater pre- and post-operative VEGF, and (c) post-operative negative support was related to lower post-operative cortisol concentrations. While not the focus of the current study, these results suggest interesting relationships between these variables that should be studied in future research. While the study had notable limitations that may have impacted study results, it highlights 1) the importance of examining ambivalent support, a previously under-researched psychosocial variable, in psychoneuroimmunologic research and 2) the methodological challenges in conducting clinical research in cancer populations during the perioperative period.

LIST OF REFERENCES

Adler, N. E., Epel, E. S., Castellazzo, G., & Ickovics, J. R. (2000). Relationship of subjective and objective social status with psychological and physiological functioning: preliminary data in healthy white women. *Health Psychology., 19,* 586-592.

American Cancer Society (2009). *Cancer facts and figures 2008*. Atlanta, GA: American Cancer Society.

Antoni, M. H., Lutgendorf, S. K., Cole, S. W., Dhabhar, F. S., Sephton, S. E., McDonald, P. G. et al. (2006). The influence of bio-behavioural factors on tumour biology: pathways and mechanisms. *Nature Reviews.Cancer, 6,* 240-248.

Baron, R. S., Cutrona, C. E., Hicklin, D., Russell, D. W., & Lubaroff, D. M. (1990). Social support and immune function among spouses of cancer patients. *Journal of Personal and Social Psychology, 59,* 344-352.

Beck, A. & Steer, R. A. (1991). *Manual for the Beck Scale for Suicide Ideation*. San Antonio, TX: The Psychological Corporation.

Brown, G. R., Rundell, J. R., McManis, S. E., Kendall, S. N., Zachary, R., & Temoshok, L. (1992). Prevalence of psychiatric disorders in early stages of HIV infection. *Psychosomatic Medicine, 54,* 588-601.

Carver, C. S. (2006). Sources of Social Support Scale. Retrieved April, 2010 from http://www.psy.miami.edu/faculty/ccarver/sclSSSS.html.

Cohen, S. (2004). Social relationships and health. *The American Psychologist, 59,* 676-684.

Costanzo, E. S., Lutgendorf, S. K., Sood, A. K., Anderson, B., Sorosky, J., & Lubaroff, D. M. (2005). Psychosocial factors and interleukin-6 among women with advanced ovarian cancer. *Cancer, 104,* 305-313.

DeVine, D., Parker, P. A., Fouladi, R. T., & Cohen, L. (2003). The association between social support, intrusive thoughts, avoidance, and adjustment following an experimental cancer treatment. *Psychooncology, 12,* 453-462.

Frick, E., Motzke, C., Fischer, N., Busch, R., & Bumeder, I. (2005). Is perceived social support a predictor of survival for patients undergoing autologous peripheral blood stem cell transplantation? *Psychooncology, 14,* 759-770.

Hamilton, M. (1959). The assessment of anxiety states by rating. *British Journal of Medical Psychology, 32,* 50-55.

Hamilton, M. (1960). A rating scale for depression. *Journal of Neurology, Neurosurgery, and Psychiatry, 23,* 56-62.

Holt-Lunstad, J., Uchino, B. N., Smith, T. W., & Hicks, A. (2007). On the importance of relationship quality: the impact of ambivalence in friendships on cardiovascular functioning. *Annals of Behavioral Medicine, 33,* 278-290.

Holt-Lunstad, J., Uchino, B. N., Smith, T. W., Olson-Cerny, C., & Nealey-Moore, J. B. (2003). Social relationships and ambulatory blood pressure: structural and qualitative predictors of cardiovascular function during everyday social interactions. *Health Psychology, 22,* 388-397.

House, J. S., Landis, K. R., & Umberson, D. (1988). Social relationships and health. *Science., 241,* 540-545.

Jatoi, A., Novotny, P., Cassivi, S., Clark, M. M., Midthun, D., Patten, C. A. et al. (2007). Does marital status impact survival and quality of life in patients with non-small cell lung cancer? Observations from the mayo clinic lung cancer cohort. *Oncologist, 12,* 1456-1463.

Jenks Kettmann, J. D. & Altmaier, E. M. (2008). Social support and depression among bone marrow transplant patients. *Journal of Health Psychology, 13,* 39-46.

Kiecolt-Glaser, J. K. & Newton, T. L. (2001). Marriage and health: his and hers. *Psychological Bulletin, 127,* 472-503.

Kirschbaum, C. & Hellhammer, D. H. (1994). Salivary cortisol in psychoneuroendocrine research: recent developments and applications. *Psychoneuroendocrinology, 19,* 313-333.

Kline, R. B. (2005). *Principles and practice of structural equation modeling*. New York, NY: The Guilford Press.

Lutgendorf, S. K., Cole, S., Costanzo, E., Bradley, S., Coffin, J., Jabbari, S. et al. (2003). Stress-related mediators stimulate vascular endothelial growth factor secretion by two ovarian cancer cell lines. *Clinical Cancer Research, 9,* 4514-4521.

Lutgendorf, S. K., Johnsen, E. L., Cooper, B., Anderson, B., Sorosky, J. I., Buller, R. E. et al. (2002). Vascular endothelial growth factor and social support in patients with ovarian carcinoma. *Cancer, 95,* 808-815.

Lutgendorf, S. K., Lamkin, D. M., Jennings, N. B., Arevalo, J. M. G., Penedo, F., DeGeest, K., et al. (2008). Biobehavioral influences on matrix metalloproteinase expression in ovarian carcinoma. *Clinical Cancer Research, 14,* 6839-6846.

Lutgendorf, S. K., Sood, A. K., Anderson, B., McGinn, S., Maiseri, H., Dao, M. et al. (2005). Social support, psychological distress, and natural killer cell activity in ovarian cancer. *Journal of Clinical Oncology, 23,* 7105-7113.

Manne, S. & Glassman, M. (2000). Perceived control, coping efficacy, and avoidance coping as mediators between spouses' unsupportive behaviors and cancer patients' psychological distress. *Health Psychology, 19,* 155-164.

Manne, S. L., Ostroff, J., Winkel, G., Grana, G., & Fox, K. (2005). Partner unsupportive responses, avoidant coping, and distress among women with early stage breast cancer: patient and partner perspectives. *Health Psychology, 24,* 635-641.

Manne, S. L., Taylor, K. L., Dougherty, J., & Kemeny, N. (1997). Supportive and negative responses in the partner relationship: their association with psychological adjustment among individuals with cancer. *Journal of Behavioral Medicine, 20,* 101-125.

Manning-Walsh, J. (2005). Social support as a mediator between symptom distress and quality of life in women with breast cancer. *Journal of Obstetric, Gynecologic, and Neonatal Nursing, 34,* 482-493.

Pagel, M. D., Erdly, W. W., & Becker, J. (1987). Social networks: we get by with (and in spite of) a little help from our friends. *Journal of Personal and Social Psychology, 53,* 793-804.

Penedo, F. J., Gonzalez, J. S., Dahn, J. R., Antoni, M., Malow, R., Costa, P. et al. (2003). Personality, quality of life and HAART adherence among men and women living with HIV/AIDS. *Journal of Psychosomatic Research, 54,* 271-8.

Pinninti, N., Steer, R. A., Rissmiller, D. J., Nelson, S., & Beck, A. T. (2002). Use of the Beck Scale for suicide ideation with psychiatric inpatients diagnosed with schizophrenia, schizoaffective, or bipolar disorders. *Behaviour Research and Therapy., 40,* 1071-1079.

Pinquart, M., & Duberstein, P. R. (In Press). Associations of social networks with cancer mortality: A meta-analysis. *Critical Reviews in Oncology/Hematology.*

Pruessner, J. C., Kirschbaum, C., Meinlschmid, G., & Hellhammer, D. H. (2003). Two formulas for computation of the area under the curve represent measures of total hormone concentration versus time-dependent change. *Psychoneuroendocrinology, 28,* 916-931.

Purdie, D. M. & Green, A. C. (2001). Epidemiology of endometrial cancer. *Best Practices and Research Clinical Obstetrics & Gynaecology, 15,* 341-354.

Ries, L. A. G., Eisner, M. P., Kosary, C. L., Hankey, B. F., Miller, B. A., Clegg, L. et al. (2004). *SEER Cancer Statistics Review, 1975-2001*. Bethesda, MD: National Cancer Institute.

Rodrigue, J. R., Pearman, T. P., & Moreb, J. (1999). Morbidity and mortality following bone marrow transplantation: predictive utility of pre-BMT affective functioning, compliance, and social support stability. *International Journal of Behavioral Medicine, 6,* 241-254.

Sephton, S. E., Sapolsky, R. M., Kraemer, H. C., & Spiegel, D. (2000). Diurnal cortisol rhythm as a predictor of breast cancer survival. *Journal of the National Cancer Institute, 92,* 994-1000.

Sharma, A., Greenman, J., Sharp, D. M., Walker, L. G., & Monson, J. R. (2008). Vascular endothelial growth factor and psychosocial factors in colorectal cancer. *Psychooncology, 17,* 66-73.

Simon, W. E., Albrecht, M., Trams, G., Dietel, M., & Holzel, F. (1984). In vitro growth promotion of human mammary carcinoma cells by steroid hormones, tamoxifen, and prolactin. *Journal of the National Cancer Institute., 73,* 313-321.

Spitzer, R. L., Williams, J. B., Gibbon, M., & First, M. B. (1992). The Structured Clinical Interview for DSM-III-R (SCID). I: History, rationale, and description. *Archives of General Psychiatry, 49,* 624-629.

Stewart, J. & Seeman, T. (2000). *Salivary Cortisol Measurement*. Retrieved April, 2010 from http://www.macses.ucsf.edu/Research/Allostatic/salivarycort.php.

Thaker, P. H., Lutgendorf, S. K., & Sood, A. K. (2007). The neuroendocrine impact of chronic stress on cancer. *Cell Cycle, 6,* 430-433.

Thompson, M. M., Zanna, M. P., & Griffin, D. W. (1995). Let's not be indifferent about (attitudinal) ambivalence. In R.E.Petty & J. A. Krosnick (Eds.), *Attitude Strength* (pp. 361-386). Mahwah, N.J.: Lawrence Erlbaum Associates.

Turner-Cobb, J. M., Sephton, S. E., Koopman, C., Blake-Mortimer, J., & Spiegel, D. (2000). Social support and salivary cortisol in women with metastatic breast cancer. *Psychosomatic Medicine., 62,* 337-345.

Uchino, B. N., Cacioppo, J. T., & Kiecolt-Glaser, J. K. (1996). The relationship between social support and physiological processes: a review with emphasis on underlying mechanisms and implications for health. *Psychological Bulletin., 119,* 488-531.

Uchino, B. N., Holt-Lunstad, J., Uno, D., & Flinders, J. B. (2001). Heterogeneity in the social networks of young and older adults: prediction of mental health and cardiovascular reactivity during acute stress. *Journal of Behavioral Medicine, 24,* 361-382.

Vedhara, K., Tuinstra, J. T., Miles, J. N., Sanderman, R., & Ranchor, A. V. (2005). Psychosocial factors associated with indices of cortisol production in women with breast cancer and controls. *Psychoneuroendocrinology, 31,* 299-311.

Wells, K. J., Booth-Jones, M., & Jacobsen, P. B. (2009). Do coping and social support predict depression and anxiety in patients undergoing hematopoietic stem cell transplantation? *Journal of Psychosocial Oncology, 27,* 297-315.

Williams, J. B. (1988). A structured interview guide for the Hamilton Depression Rating Scale. *Archives of General Psychiatry, 45,* 742-747.

Willson, A. E., Shuey, K. M., & Elder, G. H. (2003). Ambivalence in the relationship of adult children to aging parents and in-laws. *Journal of Marriage and Family,* 65, 1055-1072.

Yang, E. V., Donovan, E. L., Benson, D. M., & Glaser, R. (2008). VEGF is differentially regulated in multiple myeloma-derived cell lines by norepinephrine. *Brain, Behavior and Immunity, 22,* 318-323.

Yang, E. V., Sood, A. K., Chen, M., Li, Y., Eubank, T. D., Marsh, C. B. et al. (2006). Norepinephrine up-regulates the expression of vascular endothelial growth factor, matrix metalloproteinase (MMP)-2, and MMP-9 in nasopharyngeal carcinoma tumor cells. *Cancer Research., 66,* 10357-10364.

Zhao, X. Y., Malloy, P. J., Krishnan, A. V., Swami, S., Navone, N. M., Peehl, D. M. et al. (2000). Glucocorticoids can promote androgen-independent growth of prostate cancer cells through a mutated androgen receptor. *Nature Medicine, 6,* 703-706.

Zhou, B., Yang, L., Sun, Q., Cong, R., Gu, H., Tang, N. et al. (2008). Cigarette smoking and the risk of endometrial cancer: a meta-analysis. *The American Journal of Medicine, 121,* 501-508.

BIOGRAPHICAL SKETCH

Stacy M. Dodd was born and raised in Waterford, Michigan, the oldest of two children of Dennis and Jeriann Dodd. She graduated from Waterford Kettering High School in 2001 and subsequently enrolled in the University of Michigan in Ann Arbor, Michigan. While at the University of Michigan she was awarded the Muenzer Memorial Award for Outstanding Female in Honors Psychology. In May 2005, Ms. Dodd received a Bachelor of Arts with High Distinction in Psychology.

Following her undergraduate career, Ms. Dodd was offered an Alumni Fellowship to attend graduate school at the University of Florida through the Clinical and Health Psychology Department. She enrolled in the program in August 2005 under the mentorship of Dr. Deidre Pereira. During her first year of graduate school she was awarded a Trainee Travel Grant to present her research titled “Depressive Symptoms and Cervical Neoplasia in HIV+ Women with Human Papillomavirus Infection” at the Psychoneuroimmunologic Research Society’s annual meeting. She subsequently expanded this research into her master’s thesis, and graduated with a Master of Science degree in psychology in 2007. She continued her research under the mentorship of Dr. Pereira, and in 2009 was awarded a Public Health and Health Professions Research Grant for her dissertation research, the University Women’s Club Graduate Student Scholarship, and the Department of Clinical and Health Psychology Research Award in Health Psychology. She began her pre-doctoral internship at the VA Palo Alto Health Care System in September 2009 and has accepted a post-doctoral fellowship position at the VA Palo Alto for 2010.