THE CONTROL SYSTEM DESIGN OF AN OMNI-DIRECTIONAL VEHICLE PLATFORM

By

KYUHYONG YOU

A THESIS PRESENTED TO THE GRADUATE SCHOOL
OF THE UNIVERSITY OF FLORIDA IN PARTIAL FULFILLMENT
OF THE REQUIREMENTS FOR THE DEGREE OF
MASTER OF SCIENCE

UNIVERSITY OF FLORIDA

2009

To my mom and father

ACKNOWLEDGMENTS

I would like to express my deepest thanks and gratitude to my advisor, Prof. Carl Crane, for his invaluable support, supervision and advice for this research project. His guidance and provision lead this thesis to become successful. I would like to thank Prof. Antonio Arroyo for helping me to pursue my interest in robotics and become my committee. Without his advice, I would not have a chance to start this research. Thanks also go to the rest of my committee Prof. Scott Banks for his interest in my research project.

I am also grateful to Shannon Ridgway for his technical support and practical advice throughout the development and testing of this project. I thanks to all my fellow students at the Center for Intelligent Machines and Robotics for their help and friendships. I would never forget the time I shared with them.

Lastly, I would like to thank my parents, Miyong Oh and Keunoh You, for their endless support and love throughout my life. I thank my brother, Sunhyong, for his care and support. I would also like to thank my friends Seokkeun Kim, Sangwook Park and M. Park for their friendships and encouragements.

TABLE OF CONTENTS

LIST OF TABLES

LIST OF FIGURES

LIST OF ABBREVIATIONS

CAD	Computer Aided Design
CIMAR	Center for Intelligent Machines and Robotics
DOF	Degree of Freedom
HMV	High Mobility Vehicle
IGVC	Intelligent Ground Vehicle Competition
JAUS	Joint Architecture for Unmanned System

Abstract of Thesis Presented to the Graduate School
of the University of Florida in Partial Fulfillment of the
Requirements for the Degree of Master of Science

THE CONTROL SYSTEM DESIGN OF AN OMNI-DIRECTIONAL VEHICLE PLATFORM

By

Kyuhyong You

August 2009

Chair: Carl Crane
Major: Mechanical Engineering

Advancements in robotics technology have enabled robots to become more popular and it is no longer unusual to see autonomous vehicles moving in industrial and other environments. When an autonomous vehicle is operating in a crowded environment such as a manufacturing area or in a building, there are more chances of interacting with people or social infrastructures and thus requiring high maneuverability of the vehicle platform. In this paper, I introduce an Omni-directional vehicle platform. The omni-directional aspect of the platform is expected to give high maneuverability of the autonomous vehicle by allowing the vehicle to move virtually in all direction on a plane. This feature will generate more options for path planning and obstacle avoidance when applied to an autonomous vehicle.

This thesis describes part of the design and development of an omni-directional vehicle platform. It focuses on the hardware control system. A prototype vehicle controller using an embedded micro controller and a Windows program is developed and tested. This omni-directional vehicle has three independently steerable wheels and steering actuators. The control methods of different types of actuators are summarized followed by a series of tests.

CHAPTER1
INTRODUCTION

Introduction

The Center for Intelligent Machines and Robotics (CIMAR), in the Mechanical and Aerospace Engineering Department at the University of Florida has long participated in research and development of autonomous vehicles. Among achievements made by CIMAR in robotics, participating in the Intelligent Ground Vehicle Competition (IGVC) resulted in great success in past years. The TailGator shown in Figure 1-1 was developed in 2003 and proved competitive in autonomous ground vehicle design by winning 1st place in the competition.

Figure 1-1. TailGator (CIMAR, 2003)

Like the vehicle shown above, most of the mechanisms used in developing autonomous vehicle systems at the University of Florida were based on Ackerman steering or tracked vehicles[1]. Some researchers at CIMAR found limitations of vehicles mobility due to the non-holonomic constraints of the wheels. This study aimed to develop a high mobility vehicle (HMV) that would not be subject to the same motion constraints. Fulmer (2003) successfully demonstrated the performance of an omni-directional wheel for the HMV system[2]. The omni-

directional wheel developed at the CIMAR is basically a type of brushless motor embedded in the hub of a wheel with all the gear trains and cooling pipes around it. The figure 1-2 shows the work done by Fulmer and the platform of the vehicle.

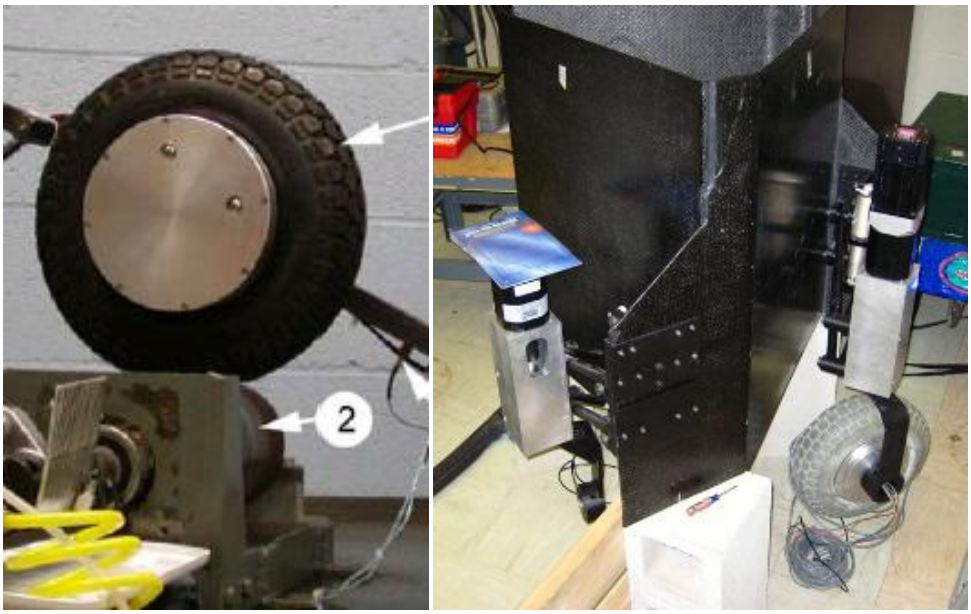

Figure 1-2. Finished design of an omni-directional wheel and the vehicle platform (Fulmer et al., 2003)

The vehicle platform is composed of a main body frame, three independent steering motors and omni-directional wheel motors. The wheel motors are assembled to the steering actuator with an L-shape wheel bracket. Though the platform was developed, no further test or study has been done due to a lack of available controllers. The design and development of a controller for this vehicle platform will be described in the rest of this thesis.

The Concept of Omni-Directional Mobility

Locomotion

Typically, an autonomous vehicle system has a designated mission or target which may be located on the ground, sea or in the sky. One method to describe effected motion on a vehicle is

by the forces required for operation. Locomotion describes the process of causing an autonomous vehicle to move [3]. Implementation of locomotion deals with the design of a mobile platform with a control mechanism that delivers an autonomous system to the target most efficiently and precisely.

Wheeled mobile robots

Wheeled mobile platforms are widely used in autonomous ground vehicle systems. Several methods exist to describe the behavior of a vehicle based on the number of wheels and their configuration. The design of a wheeled robot involves kinematics and dynamics knowledge of the specific vehicle platform. Kinematics deals with the geometric combination of components that construct the vehicle platform such as the location of wheels and types of brackets used. The study of kinematics helps identify the motions of the vehicle without consideration of the forces that are applied to the vehicle. Kinematics describes the constraints of control mechanisms and behavior of a system. Figure 1-3 presents the physical dimensions of the vehicle system. Note that the arbitrary heading position is defined here for reference. Three wheel motors are named as motor A, motor B and motor C as they represent front side, rear left and rear right respectively.

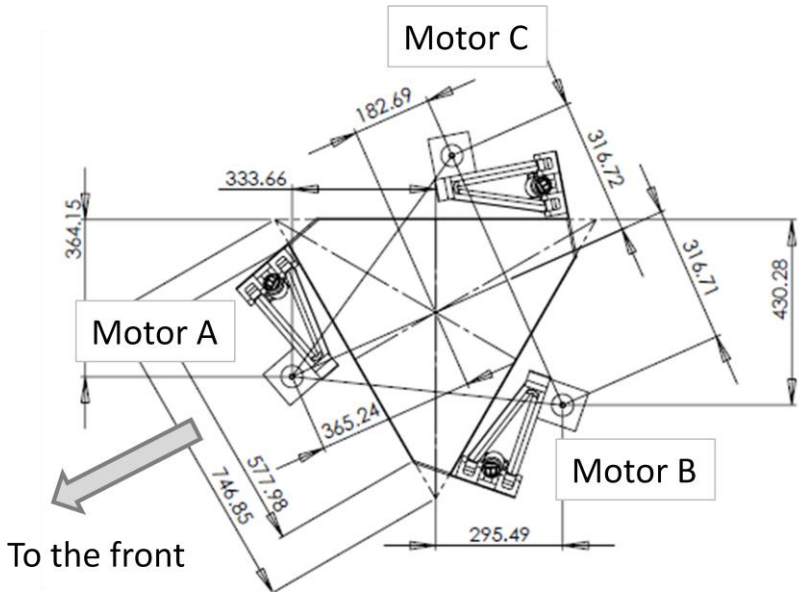

Figure 1-3. Physical dimensions of the platform. Dimensions are measured from the prototype platform and drawn on a CAD system.

If forces are applied to a vehicle system, they will cause the vehicle to start moving and the magnitude and direction of the forces will affect the resulting motion. Study of dynamics involves understanding of dynamic motion and predicts the future orientation and acceleration of the vehicle.

The following assumptions are made to model the wheeled vehicle.

1. The robot is built from rigid mechanisms.
2. No slip occurs in the perpendicular to the direction of rolling (no-slipping)
3. No translational slip occurs between the wheel and the floor (pure rolling)
4. The robot contains at most one steering link per wheel.
5. All steering axes are perpendicular to the floor.

To describe the wheeled robot the following parameters are applied.

Posture of the vehicle can be expressed as the position (x, y) and orientation θ

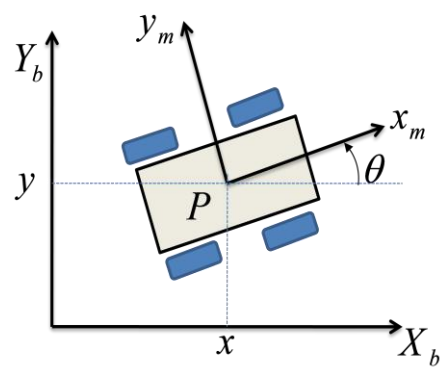

Figure 1-4. Reference frames

$\{X_b, Y_b\}$ represents fixed base frame

$\{x_m, y_m\}$ represents moving reference frame of the vehicle

Then the posture of the vehicle in the base frame can be expressed as

$q = \begin{bmatrix} x \\ y \\ \theta \end{bmatrix}$ Vehicles posture in base frame

Now the vehicle kinematics can be expressed as the types of wheels attached to the platform. The various types of wheels can be categorized by steerability, orientation of the steering, and wheel configurations. Figure 1-5 shows the most commonly used wheels on vehicular platforms.

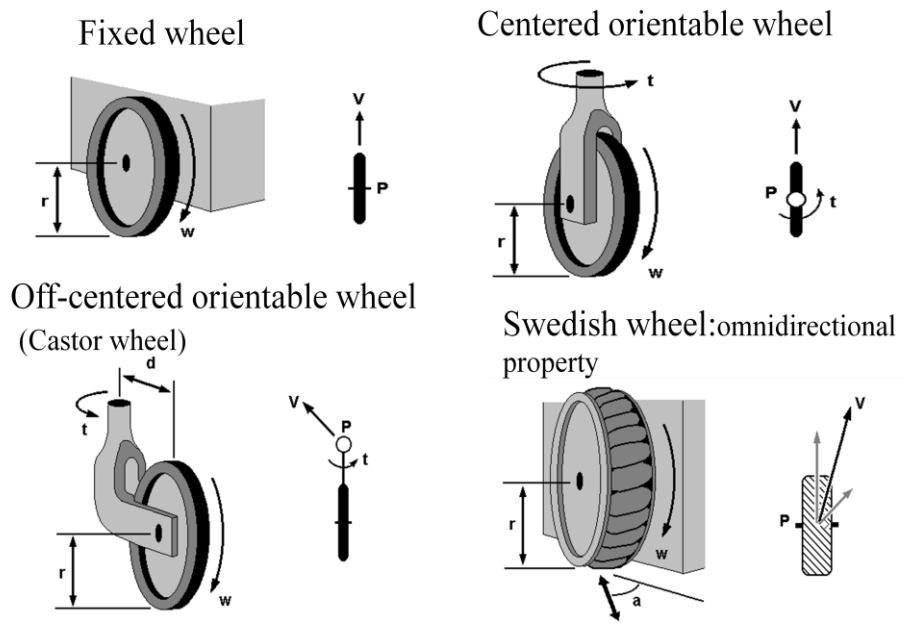

Figure 1-5. Wheel types (Xiao, J., “Mobile Robot Locomotion”)

The steerable wheel can be expressed with the orientation of the rotation axis. If the wheel rotates about the geometric center of the wheel as described in the figure 1-2

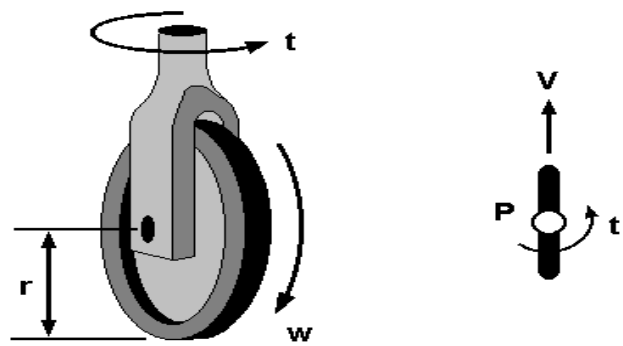

Figure 1-6. Kinematic expression of the omni-directional wheel mechanism

r = wheel radius

v = wheel linear velocity

w = wheel angular velocity

t = steering velocity

Degree of mobility

Degree of mobility describes the degree of freedom of the vehicle motion. The term instantaneous center of rotation (ICR) or instantaneous center of curvature (ICC) is used to define the number of degrees of freedom, as shown in Figure 1-7. The omni-directional vehicle described in this thesis has a mobility of three, consisting of two translational and one rotational.

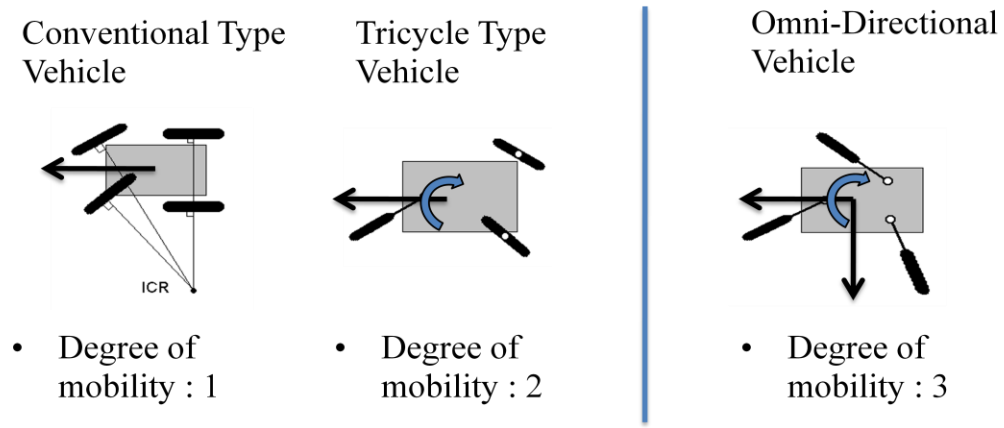

Figure 1-7. One, two, and three degree of mobility configurations (Xiao, J., "Mobile Robot Locomotion")

Degree of steerability

The degree of freedom of a vehicle is often denoted as degree of steerability and is defined by the number of centered orientable wheels that can be steered. If no centered orientable wheels exist, the vehicle is said to have zero degrees of steerability.

Omni-Directional Vehicle Platform

As described, omni-directional mobility of wheeled vehicles can be achieved by expanding the steerability of the wheels. There have been several approaches proposed to implement an omni-directional vehicle. Among those, steerable wheels and Mecanum[1] wheels are most widely discussed and researched previously. In the past, four wheeled steering vehicles [4] have been

[1] Mecanum wheels refer to the name of the original Swedish manufacturer.

developed. The vehicle has steering wheels with conventional tires and can move omni-directionally by orienting all wheels in the same direction, and moreover it can rotate. Omni-wheel or Mecanum wheel approach introduced rolling mechanisms to the conventional type wheel so that it can move laterally.

Special Wheel Designs

Special wheel designs often include modification of conventional wheels or rollers. Mecanum wheels, referring to the name of the original Swedish manufacturer, have rollers as treads. The rollers have axles skewed with respect to the wheel axle[5]. These wheels provide a practical way of providing simultaneous vehicle motion in all three directions, longitudinal, lateral, and yaw, without singularities.

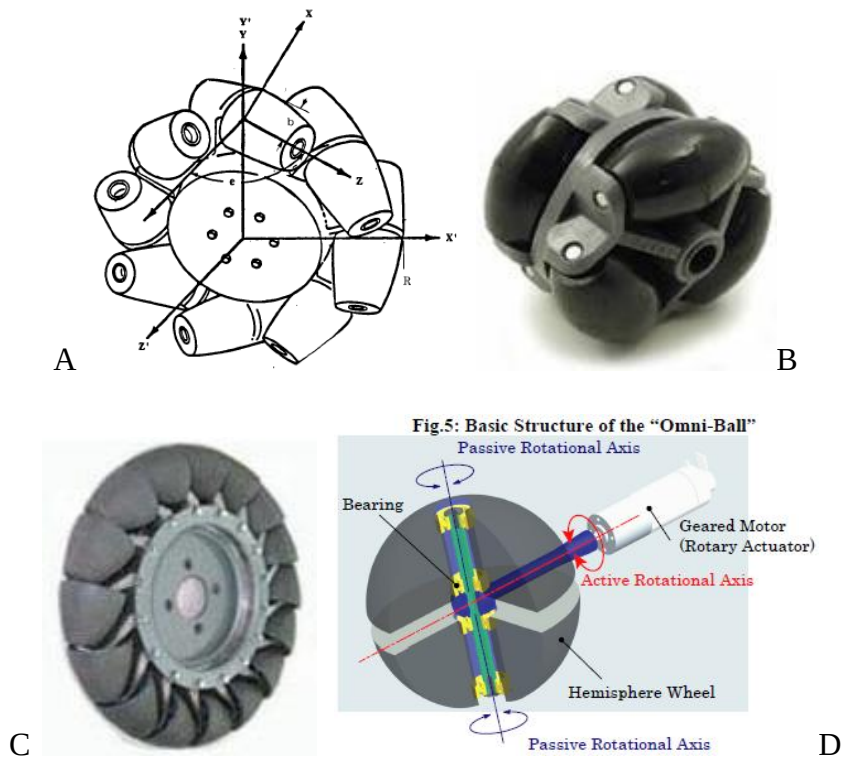

Figure 1-8. Example of Omni-directional wheels A) Mecanum Wheel (Stephen, L. D., Brett, D. L), B) Omni-Wheel (Society of Robots, http://www.societyofrobots.com/robot_omni_wheel.shtml", Last accessed 04/ 20/2009), C) WESN® Wheel, D) "Omni-Ball" (Kenjiro, T. et al., 2007)

Yasumasa K et al, have developed an omni-directional wheelchair using Mecanum wheels [6]. An Omni-directional lift truck from Airtrax shown in the figure 1-9 is one of the examples of using Mecanum wheels. This vehicle is commercially available now.

Figure 1-9. An industrial lift truck using Mecanum wheel (Airtrax)

Note:"http://www.airtrax.com/vehicles/sidewinder.html", Last accessed 04/20/2009

Some miniature sized Omni-wheels are widely used in smaller applications such as robot soccer players [7] developed by Cho, S.H. Mecanum wheels also are available in miniature sized robots [10]. Kenjiro and Riichiro developed even more rigorous and complex omni-directional wheel using spherical wheels [8]. Each of these special wheel designs greatly extended the maneuverability of vehicles but certain limits also apply. The relatively smaller diameter of the rollers often limits the range of operation to even surface. Also, when omni-wheels or Mecanum wheels are operating on an unpaved road similar to where IGVC is held, it is hard to predict the future orientation for a particular command. Moreover, rolling mechanisms often increases power loss due to conflicts among other actuators [9].

Conventional Wheel Design

Conventional wheel type designs often employ indecently driven steering actuators for omni-directional mobility. These types of design usually have larger load capacities and are

robust to irregular ground surfaces. Also, the simplicity of implementing steerable wheel mechanisms made it widely used in industry, robotics and military [11]. The SEEKUR robot shown in the Figure 1-10 was developed by Mobile Robots and demonstrated its ability of operating in tough environment with four omni-directional steerable wheels. However conventional wheels with steering mechanisms for omni-directional vehicles are not considered, as they have non-holonomic mobility [12] because when the vehicle encountered a non-continuous curve, there is a finite amount of time before the steering mechanism can reorient the wheel to the next projected curve [2].

Figure 1-10. The Seekur, a commercially available omni-directional wheeled robot (Mobile Robot)

The OmniGator

Based on the preliminary research on the omni-directional vehicle platform, researchers at CIMAR developed the OmniGator. For the purpose of having robust mobility on unpaved road, the OmniGator has three independently steerable hub drive wheel motor. One of the distinct features of the OmniGator is that its steered driving wheel is designed to have zero offset. This design is helpful to avoid extra forces that may be applied when steering the wheel instantaneously. Figure 1-11 shows computer aided design of the omni-directional vehicle platform developed at CIMAR.

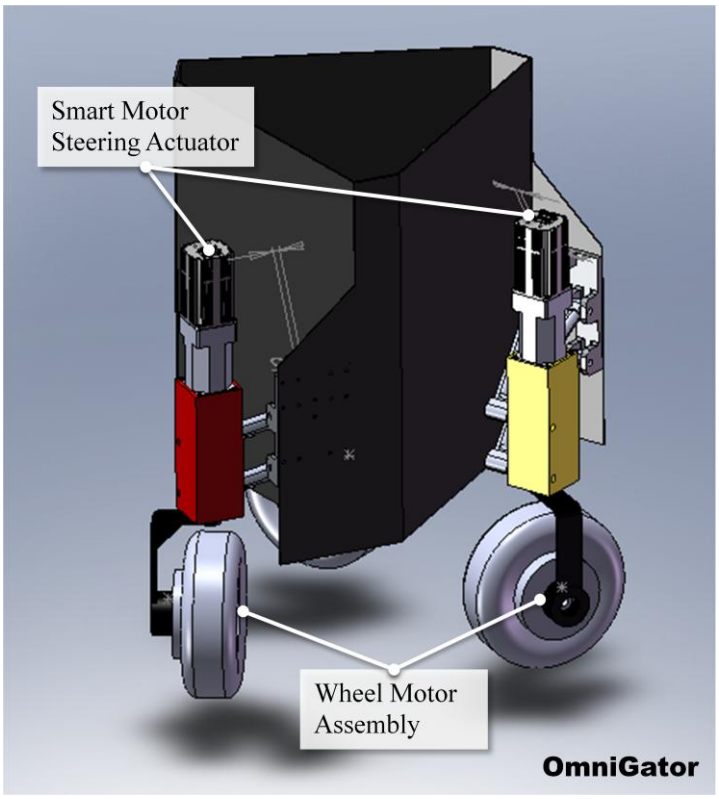

Figure 1-11. The OmniGator redesigned on a CAD system

Thesis Focus

The OmniGator vehicle platform including wheel motors, steering actuator, carbon fiber body and wheel brackets was built but no further attempts were made to build a control system for it. In order to make the OmniGator to become operational as an autonomous ground vehicle, getting the control of the wheels and actuators should be the first step into the system design. Since most of the mechanical parts were already made, certain restrictions such as the performances of the motor and gear trains exist in designing the system. Furthermore, many difficulties were expected mostly due from using fully customized brushless DC motor for the omni-directional wheel. A functional motor controller based on classic PID control method will allow for autonomous computer control of the platform. Control of the steering actuators was part of designing the control architecture of the OmniGator.

This thesis will cover the design and implementation of the vehicle actuation systems with omni-directional mobility. An electric hardware system architecture and control interface is introduced. Details of actuation system are presented with operational theory of control system. With designed PID motor throttle controller, PID gain tuning procedures and results will also be discussed.

CHAPTER 2
VEHICLE SYSTEM DESIGN

This chapter discusses conceptual design of the entire power system of the vehicle platform and control architecture of the actuation system. Since the vehicle is expected to be operated autonomously, sensor architectures and higher level control system should be discussed as well as actuation system of the vehicle. In the later part of this chapter, a vehicle control architecture is presented.

Vehicle System Architecture

Power System

The autonomous vehicle system is entirely electric powered and sourced from lead acid batteries. The stack of batteries can supply 48 Volt DC as a main power source and it relies on an onboard gas powered generator for charging. The AC input from the power generator is converted to DC and is used for charging the batteries. Main power is directly supplied to the three motor amplifiers and SmartMotors which consumes most of the power. The remaining power is stepped downed to respective device's power rating using DC to DC converter. Detailed schematic of electric power system is drawn in figure 2-1.

For the purpose of emergency stop (E-Stop) features, both soft and hard kill method have been considered. As described in the IGVC rules, every autonomous ground vehicle is required to have a mechanical and wireless E-Stop method [13]. The main kill switch is located between a 12VDC converter and relays. This would not be connected to the onboard computer which contains higher level controller and only affects low level device controller, causing immediate reset.

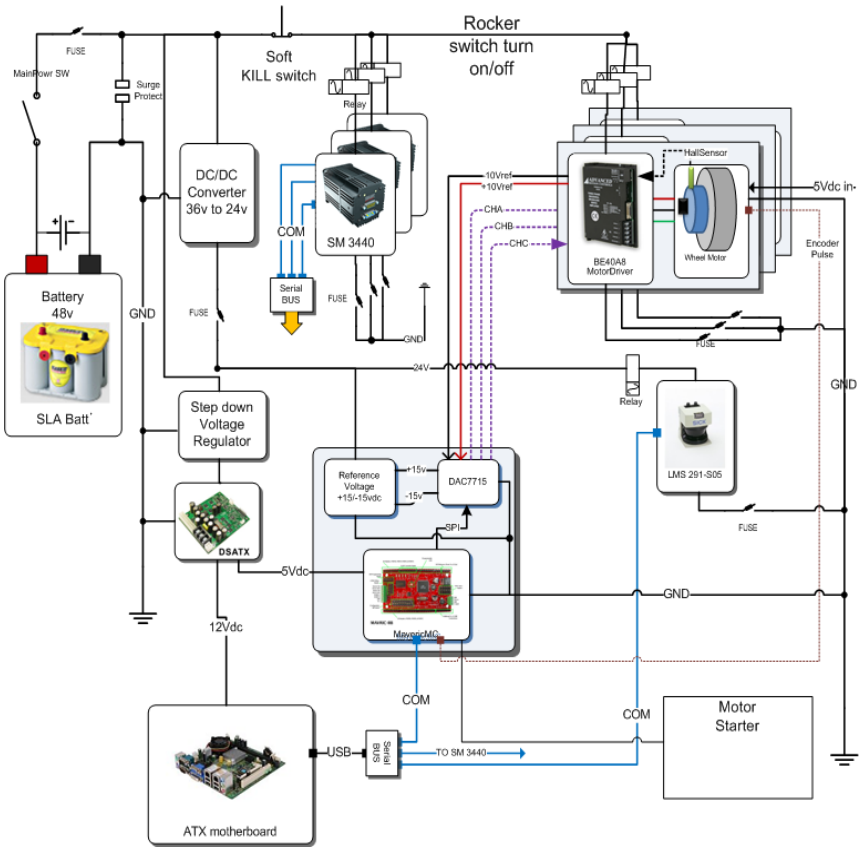

Figure 2-1. Schematics of power system of the omni-directional vehicle

Hardware Control by Embedded Micro Controller

In order to prevent electrical leakage or possible damage from unexpected operation, the high powered electric actuator systems must be turned on or off by users' command input. For safety, it is recommended that any autonomous vehicle have functions that allow operators to shutdown the vehicle at anytime.

All hardware components have relays between the power source and ground that are controlled by an embedded micro controller. ATmega128 micro controller from ATMEL is used to control the relays. The controller I/O pins are connected to the relays allowing it to turn the connected device on or off. The microcontroller will determine when to activate the devices based on control inputs received from the onboard computer. To prevent an accidental switch-on

during microcontroller initialization, an inverter is inserted between the relay arrays and microcontroller's I/O pins.

Motor Control System

Before design of the control system can begin, it is essential to understand the characteristics of the system, including types of inputs and outputs, communication method, and control method. The vehicle control methodologies in designing an omni-directional vehicle are broadly separated into two types: centralized and decentralized [14]. In the centralized type, wheel modules control their own motions based on information commanded by a central controller. By contrast, the decentralized type has no central controller, and individual wheel modules synchronize their motions using local information. The centralized type can easily reduce the conflict among motions of wheel modules under non-holonomic constraints. Therefore, a centralized type controller has been selected for this project. The entire vehicle platform is composed of two different types of components: steering and throttle systems. For the steering system, a pre-existing SmartMotor was chosen as it contains an embedded controller and can natively talk through a RS-232 serial connection.

Figure 2-2 shows a simplified view of the control architecture for the omni-directional vehicle platform. The onboard computer takes inputs from either an autonomous controller or manual control input such as a joystick. Depending on the mode of operation, the omni-directional motion generator determines the control efforts of each component. A steering angle command is sent to the SmartMotor controller via an RS-232 serial port and the latest position of the steering angle is updated.

A different approach is required for throttle control since the motor is incapable of directly processing a command from the system. Instead, a real time embedded micro controller is used to interpret throttle input. This controller has a RS-232 serial port to communicate with the main

computer while controlling the motor. A real time system is required for completing the digital PID controller.

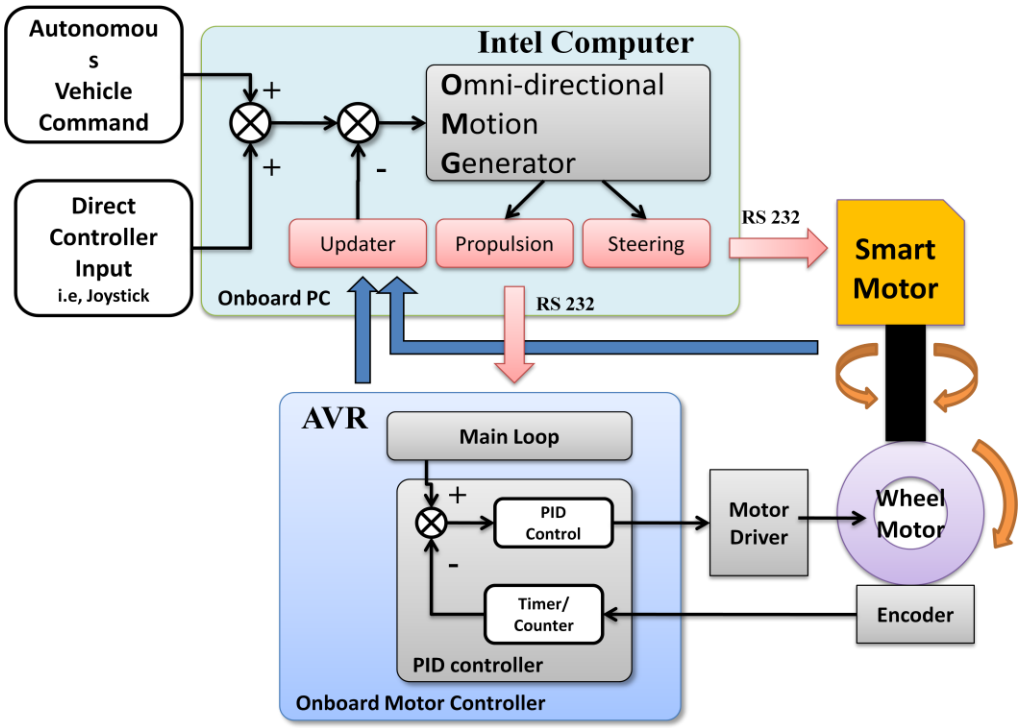

Figure 2-2. The component interface architecture

CHAPTER 3
ACTUATION SYSTEMS AND CONTROL

This chapter describes the control implementation for both throttle and servo actuator. Hardware configurations and control methods are discussed in this chapter. For the throttle control system, a discrete digital PID controller is introduced. Steering and alignments for servo actuator is discussed in the later part of this chapter.

Throttle System

The vehicle's throttle system is responsible to control the velocity of the vehicle determined by the higher level control architecture. The OmniGator has three brushless DC motor (BLDC) for throttling the vehicle. For driving the motors, three analog input BLDC motor amplifiers are used. The motor amplifier converts voltage input to switching currents for the motor. The throttle control system mainly produce analog voltage as an input to the motor driver and sense the velocity of the wheel using encoder pulse output. A PID controller has been implemented using the micro controller. This section discusses implementation of OmniGator's throttle control system.

Throttle System Hardware Components

The throttle system of the OmniGator is mainly composed of three BLDC wheel motors, motor amplifiers and a motor controller. In the implementation of the control system, it is required to understand the kind of inputs and outputs of certain components and to find ways to connect different components together. The Omni-Directional wheel motor generates the main throttle power for the OmniGator and is driven by a brush-less motor amplifier. The fully customized motors were designed and fabricated by Fulmer [2]. A detailed explanation of its design, construction and testing is fully described in his thesis.

Brushledd DC wheel motor

Designing the BLDC motor controller requires basic understanding of BLDC motor itself. There are several parameters affect the velocity control of a BLDC motor such as Back EMF, torque constant. Following torque and Back EMF equations describes the property of the motor. The Back EMF magnitude can be written as

$$E = 2NlrB\omega \tag{3-1}$$

And the torque term as

$$T = \left(\frac{1}{2}i^2\frac{dL}{d\theta}\right) - \left(\frac{1}{2}B^2\frac{dR}{d\theta}\right) + \left(\frac{4N}{\pi}Brl\pi i\right) \tag{3-2}$$

Where *N* is the number of winding turns per phase, *l* is the length of the rotor, r is the internal radius of the rotor, *B* is the rotor magnet flux density, ω is the motor's angular velocity, *i* is the phase current, *L* is the phase inductance, θ is the rotor position, R is the phase resistance. Equation 3-1 shows the Back EMF is proportional to the motor velocity. Equation 3-2 explains relationship between torque and the phase current. The first two terms in the torque expression are parasitic reluctance torque components. The third term produces mutual torque, which is the torque production mechanism used in the case of BLDC motors.

Brushless DC motor amplifier

BE40A8 motor amplifier from Advance Motion is used to power the drive wheels. This particular driver takes analog voltage range from +/-15 Volts as an input and translates it into switching power source to the motor.

Digital to analog converter

As explained earlier, the motor amplifier requires analog signal as a reference. A DAC7715 from TI was selected for this application. The DAC interprets the receiving serial peripheral interface (SPI) command from the embedded micro controller to convert reference

voltage to an analog voltage output. Figure 3-1 shows the basic operation of the DAC. The DAC 7716 is a quad, serial input, 12-bit, voltage output DAC. It has architecture of classic R-2R ladder configuration in conjunction with following operational amplifier which served as a buffer. As shown in the figure

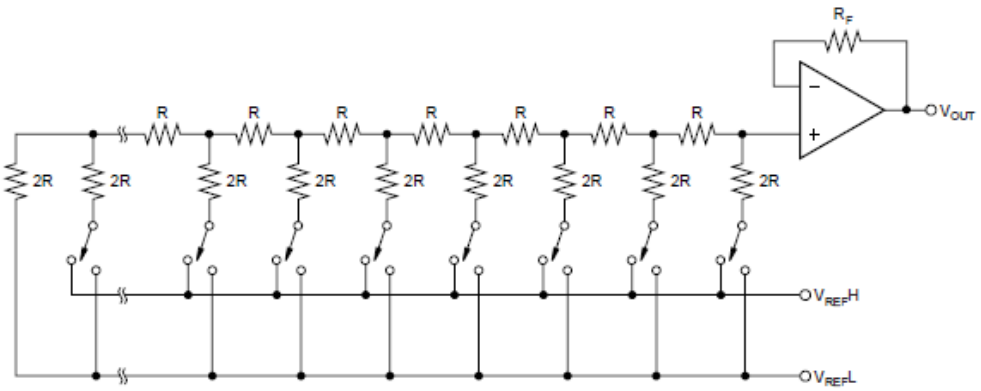

Figure 3-1. Schematic diagram of an R-2R ladder type digital to analog converter

The minimum and maximum voltage output is set by external voltage references ($V_{RFE}H$ for higher reference voltage and $V_{REF}L$ for lower reference voltage). In this case they are set to +/- 10 Volt for both directions and are supplied by the motor amplifier. 12-bit DAC code which determines the voltage output is transmitted with respective output channel in front completing a 16-bit serial input to the SDI pin. Detailed connection between the DAC and micro controller is shown in the figure 3-2.

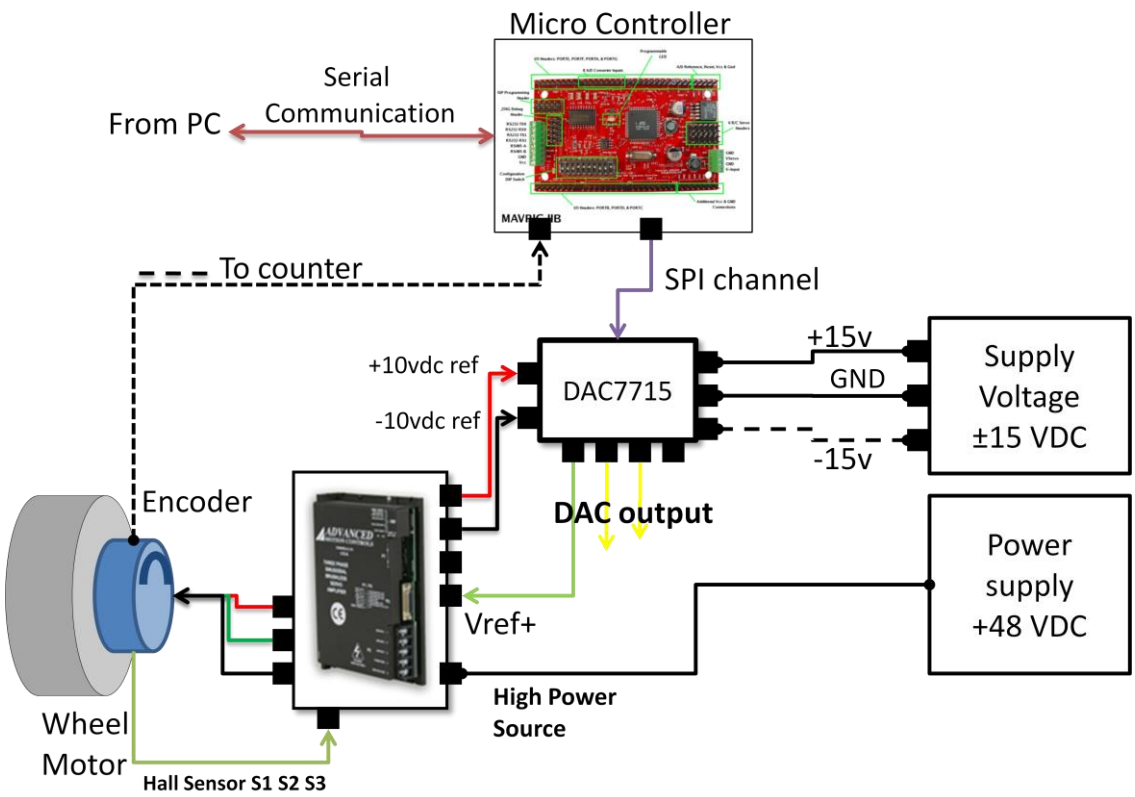

Figure 3-2. Connections between the controller, DAC, motor amplifier and the motor

Analog output voltage from the DAC is given by following equation

$$V_{OUT} = V_{REFL} + \frac{(V_{REFH} - V_{REFL}) \cdot N}{4096} \qquad (3\text{-}3)$$

Where N is the digital input code in decimal which is transmitted as a binary format to the DAC. Each new instruction requires at most 10 micro second settling time.

Encoder and micro controller

When implementing a motor controller, knowing the current velocity of the motor is very important. Rotary type encoders are most widely used for this purpose. The wheel motor has a code wheel with 1000 Count per Revolution (CPR) attached to the core shaft of the motor and an optical encoder is fixed about the code wheel as shown in the Figure 3-3. The optical encoder generates pulses whenever it detects the slits surrounding the code wheel. A microcontroller is

used to count the pulses from the encoder. By detecting both rising and falling edges of the pulses, it can double the resolution of the encoder code wheel as 2000 CPR.

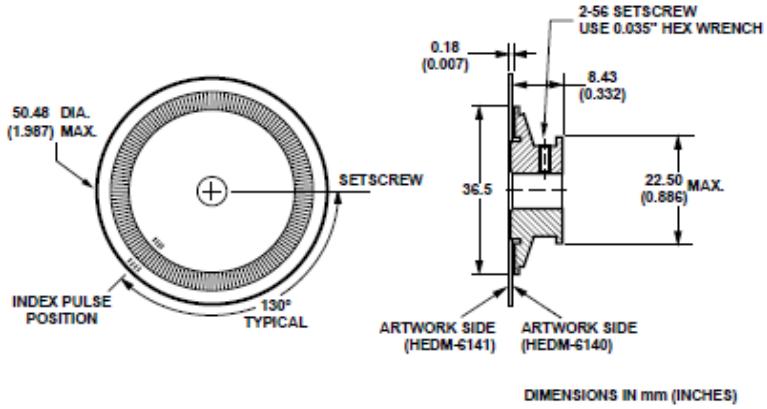

Figure 3-3. A HEDM-6140 Code wheel used for detecting angular velocity of the wheel motor (Datasheet, "Two and Three Channel Codewheels for Use with Agilent Optical Encoder Modules", Agilent Technologies, Figure 12, pp 8)

As the Figure 3-4 shows, the gear train includes several stages of gear and the final gear ratio of the gear train is 30.3:1 allowing 5mph operation of the vehicle with a motor speed of 4250 rev/min.

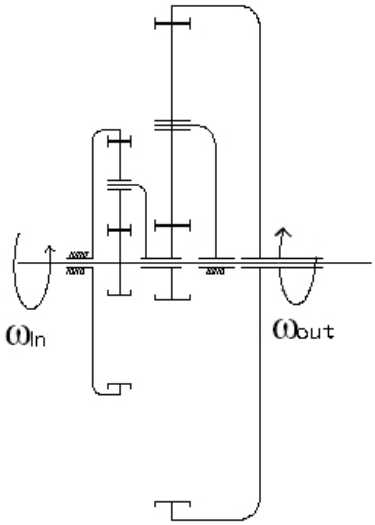

Figure 3-4. Schematic diagram of the gear train inside the wheel motor (Fulmer, 2003)

With the given gear ratio of the motor, the actual encoder resolution becomes 60600 CPR or approximately 0.006°/Count. However the accuracy of the encoder measurement can be affected by other factors such as gear backlash. Gear backlash as a definition is the play or clearance between mating teeth and is described as the amount of lost motion due to clearance. Although gear backlash is undesirable as it may introduce errors, it is an unavoidable mechanical property and should be considered in the design process. Table 3-1 summarizes the inaccuracies accounted for the design of the gear trains. Note that all dimensions in inches.

Table 3-1. Summary of backlash considerations for the gear train (Fulmer, 2003)

Gear Stage	1st Stage epicyclic gear train						2nd Stage epicyclic gear train					
Backlash Sources		Mesh1		Mesh2				Mesh 1		Mesh2		
	Sun		Planets		Ring		Sun		Planets		Ring	
Design Backlash	0.00342	0.00383	0.00159	0.00331	0.0015	0.0025	0.0037	0.00409	0.00225	0.00374	0.00285	0.00444
						Sums						
Minimum Radial Clearance		0.00501			0.00481			0.00595			0.00659	
Maximum Radial Clearance		0.00714			0.00409			0.00783			0.00669	

Detecting the RPM

The micro controller has 6 I/O pins dedicated for external trigger interrupt that can be used for counting the pulses. Whenever a rising pulse from an encoder channel is detected, an interrupt is triggered, incrementing the number of counts. Periodic internal timer clock triggers an interrupt and calculates the RPM followed by resetting the counter. The internal timer is set to 8 ms for this application. The RPM can be obtained by following equation.

$$\mathrm{RPM} = \frac{1\ \mathrm{Rev}}{2000\ \mathrm{Counts}} \times \frac{\mathrm{N\ counts}}{1\ \mathrm{Sampling\ \ Time}} \times \frac{1\ \mathrm{Sampling\ \ Time}}{8\ \mathrm{ms}} \times \frac{1000\ \mathrm{ms}}{1\ \mathrm{sec}} \times \frac{60\ \mathrm{sec}}{1\ \mathrm{min}} \qquad (3\text{-}4)$$

Where N denotes number of pulses counted during single sampling time.

If considering the gear ratio between the encoder shaft and the wheel output, the equation becomes

$$RPM(Actual) = RPM(count) \times \frac{1}{30.3} \qquad (3\text{-}5)$$

Also note that sampling time is set to 8 ms. This sampling time is determined by internal timer interrupt of the micro controller. The Timer/Counter in the ATmega128 is clocked by an external clock source. The external clock source used for the controller is rated at 16MHz and this clock is divided by a prescaling factor set in the Timer/Counter Control Register. Depending on the value selected for the output compare register, sampling time is then calculated with the following equation.

$$f_{OCn} = \frac{f_{clk}}{1024\,(prescaler\ )} \times \frac{1}{OCRn} \qquad (3\text{-}6)$$

Where f_{clk} is the clock signal frequency and OCRn is the value set for the output compare register. By applying 16MHz clock signal and OCRn value of 128 we get

$$f_{OCn} = \frac{16\times10^6}{1024} \times \frac{1}{125} = 125\ Hz \qquad (3\text{-}7)$$

This is equal to 8ms timer period.

Noise issue with using encoder in high switching current environment

While testing the controller of the wheel motor, the controller reset was observed because of unexpected voltage dropping across the micro control and the encoder. This usually happens at higher motor speeds. As specified in the datasheet of the ATmega128, any voltage drop below 4.5V makes the controller run at a slower rate. Figure 3-5 shows the safe operating area of the controller.

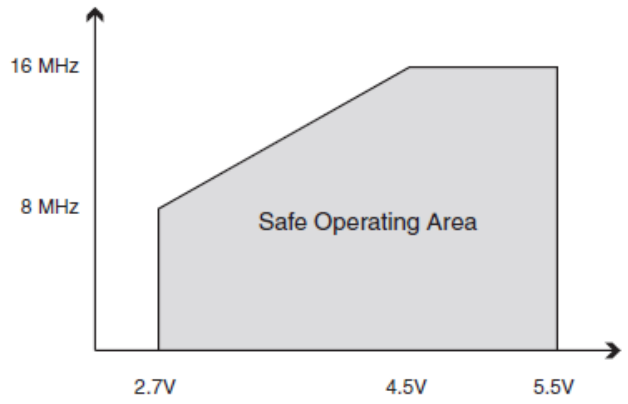

Figure 3-5. Safe operating area of ATmega128 micro controller

As described earlier, the omni-directional wheel has integrated brushless DC motor. A Hall Effect sensor and encoder sensor are also mounted inside the motor. Thus every cable runs along the same path as the amplifier to motor cables. The wiring diagram shown in Figure 3-6 illustrates how cables are connected between the controllers and the wheel motor. Note that each cable is shielded and terminated to the ground.

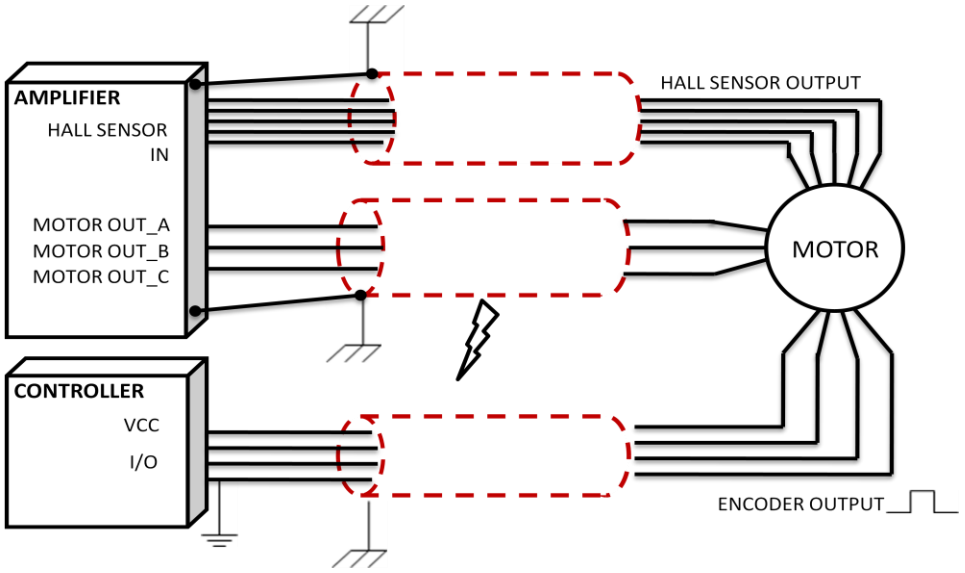

Figure 3-6. A wiring diagram shows connections between motor and the motor controller side.

Although it is not a good practice, for the ease of connection assembly and to prevent wires from wrapping around the rotating axis, all the wires have to share the same path across the

motor and controller. When high frequency switching current is flowing near a cable, noise becomes an issue especially when the feedback signal is located. The noise generated on the feedback signal simply can be described as following equation.

$$\boldsymbol{I = C \times \frac{dv}{dt}} \tag{3-8}$$

Where I = Currents induced from the noise

C = Capacitance between the cables

dv/dt = Rise time of the servo amplifier signals

The capacitance of the cables is largely related to the length of the cable. It can be explained how antenna works and longer cable suddenly become an antenna that collects signals from the near cables. Generally, the best practice to minimize the effect of noise is to design the shortest path between the controller and the encoder signal. However the kinematic constraints and mechanical configuration do not allow any cables shorter than 8 feet.

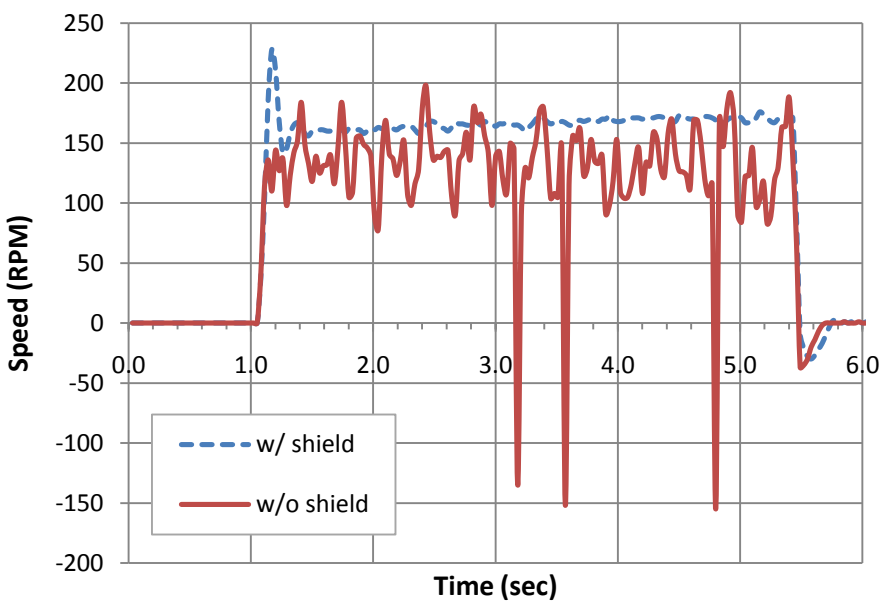

Figure 3-7. The effect of electric isolation for encoder input

Another method to solve this problem is isolating the noisy circuit from the controller. This can be done by employing an electric-isolator between the controller and encoder. The isolator or coupler is an integrated circuit widely used to protect controllers form high current source. When selecting an electric isolator for this kind of application, the rise time or response time of the isolator is much more important than other factors.

A digital isolator ISO 7240 from TI semiconductor is used to isolate the noisy circuit from the controller. Figure 3-8 shows schematic and timing diagrams of the isolator. ISO 7240 has total of four channels and runs as fast as 48Mbps. This is equivalent of 2 ns of rise time.

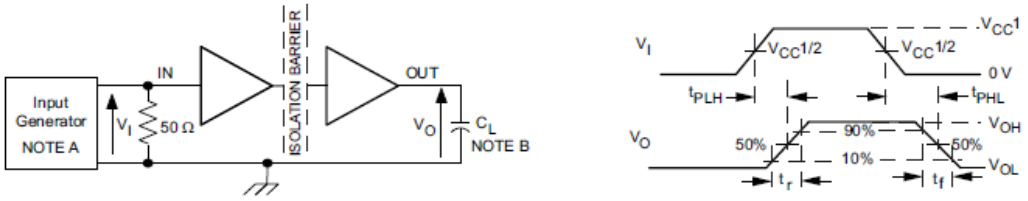

A. The input pulse is supplied by a generator having the following characteristics: PRR ≤ 50 kHz, 50% duty cycle, t_r ≤ 3 ns, t_f ≤ 3 ns, Z_O = 50Ω.

B. C_L = 15 pF and includes instrumentation and fixture capacitance within ±20%.

Figure 3-8. Switching characteristic and Voltage Waveforms (ISO 7240 Quad digital isolators)

Figure 3-9 shows how the digital isolator effectively removed noise from the original sources. Also note that the delay of the output is almost negligible compare to the original input signal.

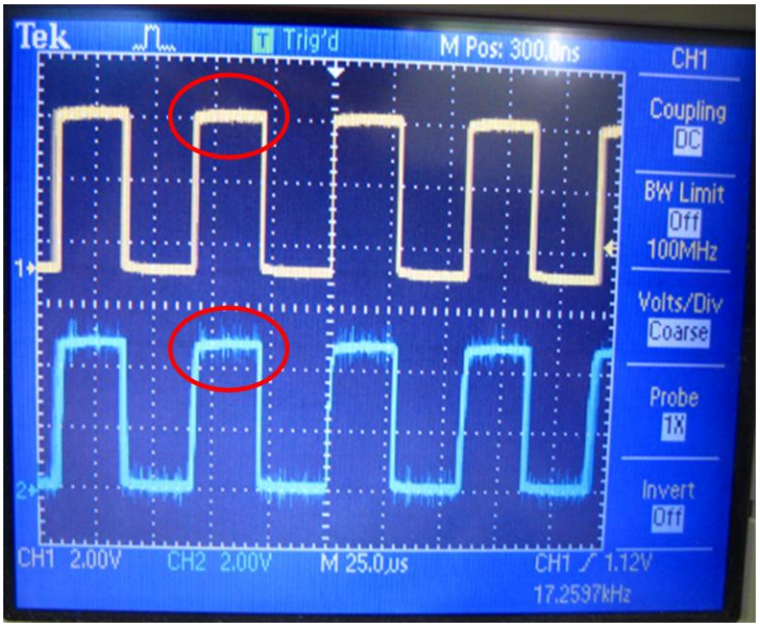

Figure 3-9. Noise removed from the output signal of the encoder sensor.

PID Controller Implementation

When controlling a motor, there is no guarantee such that linear relationship exists between input and motor speed. System disturbance or loadings such as friction or noise induced from the control circuit can affect the output speed of the motor causing it to turn more slowly than desired. To minimize the error between the desired input and the system output, a feedback control system is used to compensate and provide corrections. A PID controller is the most commonly used closed loop system in controlling motors. Figure 3-10 shows a typical application of a digital PID controller to a motor control system with analog motor amplifier. The symbol D/A represents digital to analog converter and in this case it is a 12-bit +/- 15 Volt DC converter.

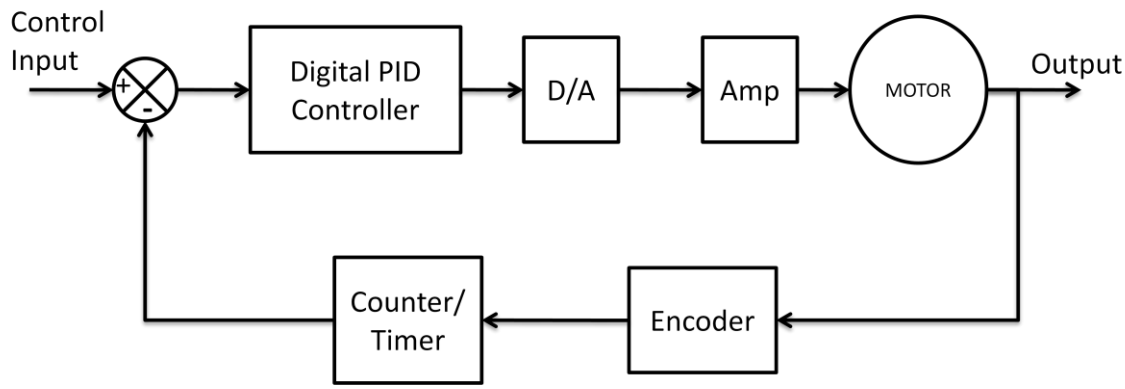

Figure 3-10. Simplified block diagram of discrete digital PID controller

Every time the Counter/Timer updates the latest encoder count, PID controller tries to compare it with the control input. The error found in here can be expressed as

$$E = GoalRPM - CurrentRPM \tag{3-9}$$

Where *GoalRPM* is desired speed of the motor, *CurrentRPM* is the latest encoder count measured during a sampling time. The sampling time in this case is set to 8 ms, a sampling rate of 125 Hz.

The first term in the PID controller tries to compensate the error by multiplying the current error by proportional gain constant K_P as,

$$Output_P = K_P E \tag{3-10}$$

In many cases, proportional control is the easiest and quickest way of solving a feedback control problem. Obviously increasing the K_P gain does affect the response time of the system. However as figure 3-11 implies, when high internal friction is present in the system, certain error may exist and that prevents the system from reaching the desired speed. More commonly known as steady state error, it can be addressed by introducing integral control.

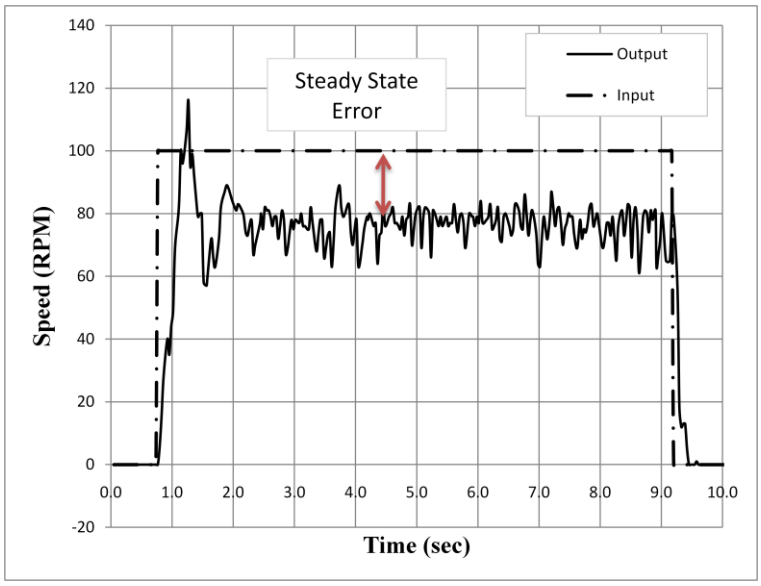

Figure 3-11. Proportional control and steady state error.

Integral control in a control system can reduce the steady-state error to zero by adding previous errors.

$$Output_I = K_I \sum(E \cdot \Delta t) \tag{3-11}$$

Where K_I is integral gain constant and $\sum(E \cdot \Delta t)$ is sum of past errors.

Since the integral control multiplies sum of all past errors, sometimes this term becomes so large that the error windup happens. By applying the limit of the error, this integral windup could be prevented.

Integral control does provide way to eliminate steady-state error but at the same time it may increase overshoot or fluctuation of the output. Derivative control helps make system response faster while reducing overshoots. As the name implies, derivative control compares the last amount of error with current error as following equation,

$$Output_D = K_D \frac{\Delta E}{dt} \tag{3-12}$$

Where K_D is derivative control gain constant and $\frac{\Delta E}{dt}$ is the rate of change of error.

By summing all terms described above, the PID controller takes the form

$$Output_{PID} = K_P E + K_I \sum (E \cdot \Delta t) + K_D \frac{\Delta E}{dt} \qquad (3\text{-}13)$$

Figure 3-12 shows the simplified block diagram expression of just implemented PID controller. The detailed result and response of the controller is discussed in Chapter 5 of this thesis.

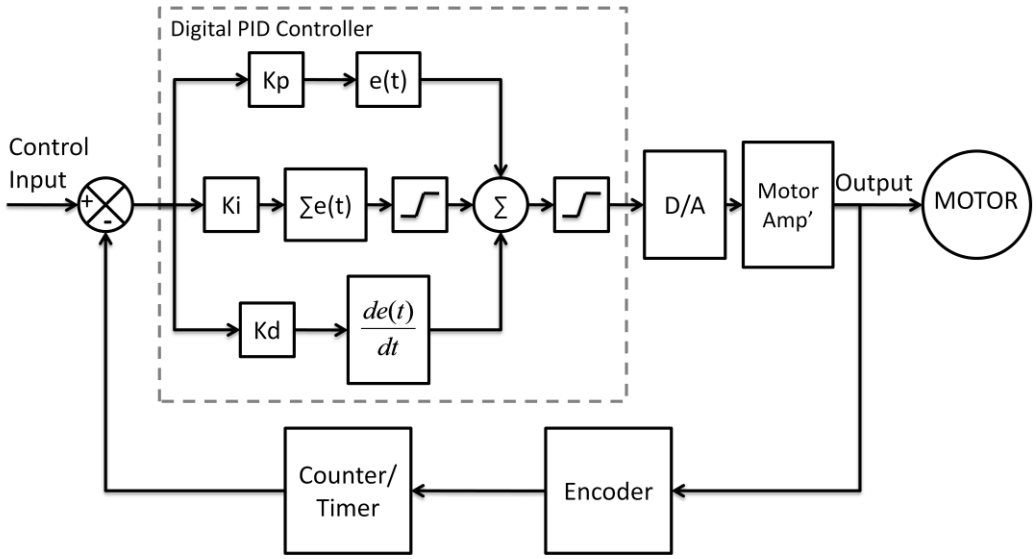

Figure 3-12. Actual implementation of a PID controller for the wheel motor.

Servo Actuator System

The Omni-directional wheel motor is independently steered by a servo actuator system. When controlling an omni-directional vehicle, each wheel has to be aligned to the desired position before motion can be commanded, requiring fast and accurate response from the servo actuator system. A SmartMotor was used as a main actuator for this system and a gear head with 49:1 ratio was attached to the end of the motor shaft to provide high resistance against the external forces such as shocks from tough terrain environment.

SmartMotor Servo Actuator

A SmartMotor SM3440D from ANIMATICS is a complete servo system equipped with individual embedded motor controller, amplifier and an encoder with resolution of 4000 counts

per revolution; this enables the system to control the motor without any external devices. SmartMotor Interface (SMI) provides a programming environment which is very similar to basic programming language to program the action of the motor. Furthermore, when using the I/O channel of the motor, external switches or a potentiometer can be added to allow the motor to detect edges or home position.

Steering Alignment

Physical alignment of the drive wheel is very important in controlling the steering angle of the omni-directional wheel. If any of the wheels are not correctly aligned towards the omni-directional motion, abnormal forces will be applied to the mechanism and that can potentially damage or destroy it. To prevent such a catastrophic event from happening, every time the device is turned on the SmartMotor must be initialized prior to operation. This initialization process includes homing and alignment. Homing can be easily done by polling limit switch output at the home position. However since the mechanical structure has already been designed and made without considering the location of such limit switches, non physical contact switches such as opto-electric switch is considered. Optical switch is basically an optical sensor which responds to light with certain wavelength. Typical diffuse type optical switch takes infrared light as an input and light over threshold intensity will set the switch either on or off. Figure 3-13 shows the configuration of the optical switch. A reflective tape is attached to the top of the bracket to reflect infrared light from the emitter of the sensor.

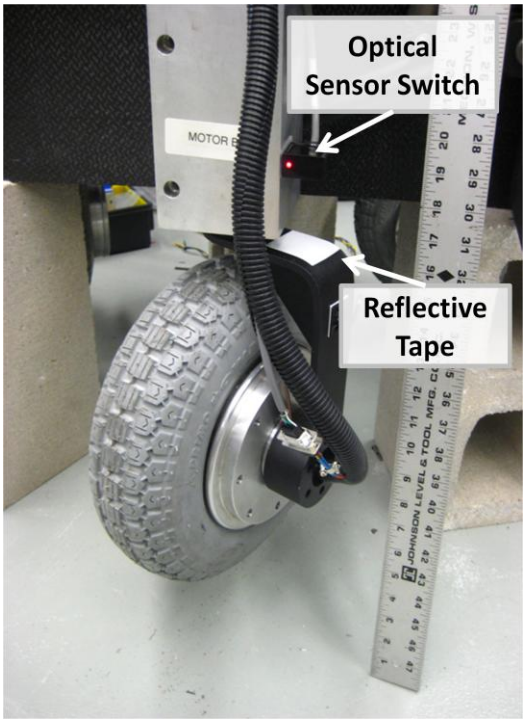

Figure 3-13. Configuration of the optical switch for homing

Once the switch detects the edge of the reflective tape on the bracket, it triggers an input to the SmartMotor making it complete stop. The motor sets this position as a new home position. Then the steering alignment can be measured relative to this home position. For the purpose of precision and alignment, a laser level is used. Figure 3-14 shows how the omni-directional wheel is aligned using laser level.

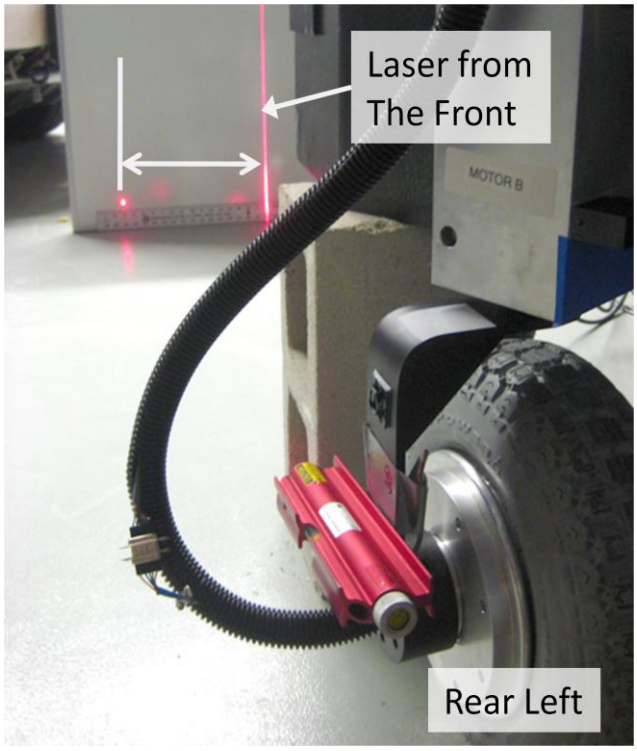

Figure 3-14. A configuration of the laser level for wheel alignment

CHAPTER 4
SOFTWARE CONTROL ARCHITECTURE

Embedded Wheel Motor and Hardware Controller

As described earlier, the digital PID controller is highly dependent on sampling time, thus requires real time controller to count the encoder signal and update the current velocity of the motor. Not like regular operating system in personal computer, Real Time Operating System (RTOS) is an event-driven or interrupt driven operating system [21]. A micro controller is used to control the Omni-directional wheel motor and the rest of devices that complete the autonomous vehicle system. The micro controller used for this project is ATmega128 from ATMEL. The ATmega128 controller is one of the 8-bit AVR micro controller series with 128K bytes of In-System programmable flash memory [15].

Computer Software and Communication

A simple GUI program was developped using Visual C# to evaluate the omni-drectional control system. This program opens serial ports to communicate with embedded wheel motor controller and three SmartMotors. Figure 4-1 shows how the program looks. Two displays on top left side of the panel graphically show the input and current pose of the vehicle. Control panel below the displays is responsible for controlling the motor. With this control panel, PID gains can be updated on-line and can record the current velocity report of the wheel from the embedded controller.

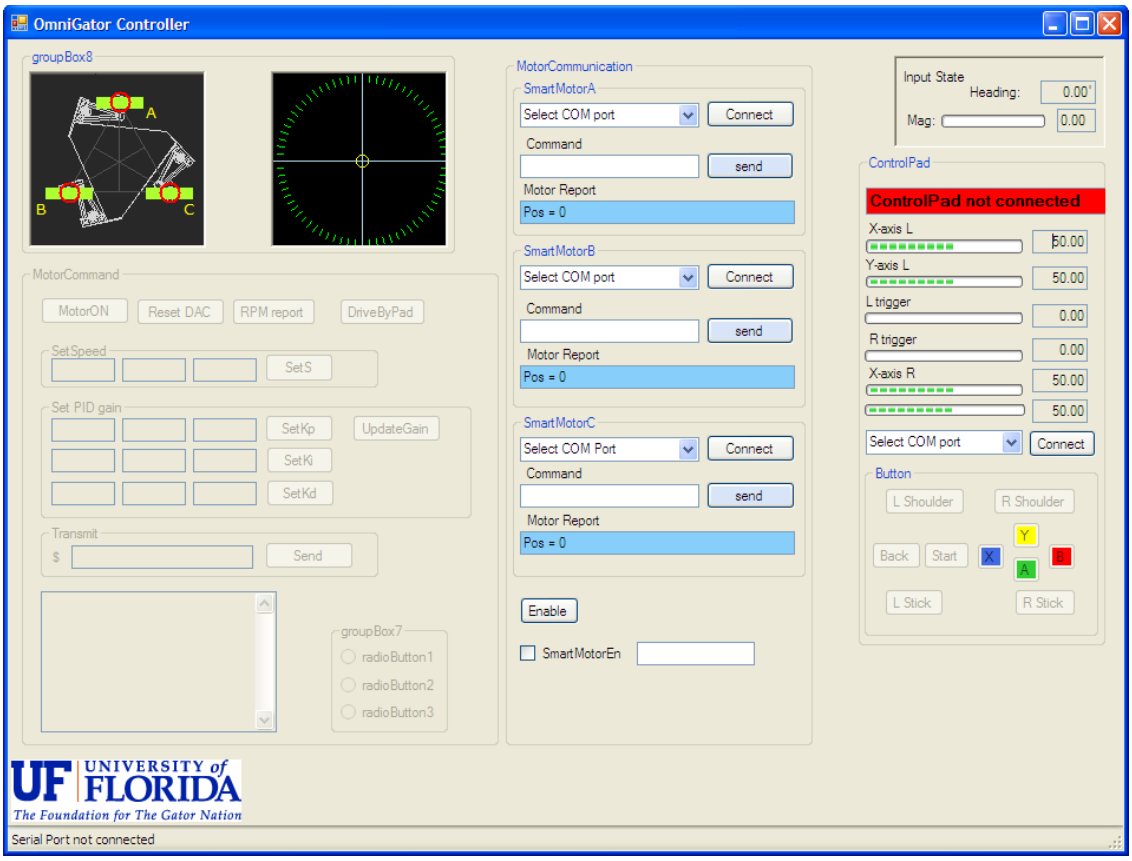

Figure 4-1. A computer software developed to control the vehicle

A communication protocol is defined to make communication between the controller and PC. Following message sets are transmitted through a serial port at the rate of 19200 bytes per seconds. Every message has to be start with '$' sign fallowed by a string type header message indicating what instruction is being transmitted. Each instruction may contains certain number of parameters and these parameters are separated by comma (',') sign.

Table 4-1. Communication protocol

Category	Size	Type	Description
Start	1 byte	string	Every messages must be start with ‘$’
Header	1~6 bytes	string	
Data	0~20 bytes	int	Optional Include parameters passing to Parameters are separated by comma (,)
Terminal	2 bytes	hex	Indicates the end of message Every message must be finished with ‘\r\n’ or 0D 0A

With the communication protocol defined PC to micro controller message is defined as following.

Table 4-2. Command message definitions from PC to the wheel controller

Message Header	Parameters	Description
$HELLO	n/a	Establish serial communication
$MOTOR	1 or 0	1: Turn on Wheel motors fallowed by resetting the DAC 0: Turn off all motors
$OFFM	n/a	Turn off all wheel motors
$SMARTEN	1 or 0	1: SmartMotor enable 0: Turn off SmartMotor
$SETS	int, int, int	Set motor speed in RPM.
$SETKP	int, int, int	Set Kp PID gain for each motor controller
$SETKI	int, int, int	Set Ki PID gain for each motor controller
$SETKD	int, int, int	Set Kd PID gain for each motor controller
$REPORT	1 or 0	1: Request periodic reporting of the speed of each motor 0: Stop reporting
$STATUS	int	1: Request PID gain inside the controller

Controller to PC communication message is defined as following

Table 4-3. Command message definitions from the wheel controller to PC

Message	Parameters	Description
$HELLO	n/a	Report that the serial communication is successfully established
$GAINUP	int, int, int, int, int, int, int, int, int,	Report current PID gain setup to PC The first three parameters indicate they are Proportional gain. Second three parameters indicate they are Integrate gain. Last three parameters indicate they are Differential gain.
$RPM	int, int, int,	Report the latest available RPM

Control by Joystick

Even though the vehicle will eventually be controlled by autonomous vehicle controller, manual control is important to demonstrate the controllability of the vehicle. Autonomous controller always has chances of failure. Ability of manual control also relates to safety concerns of the autonomous vehicle.

Since the vehicle has omni-directional platform with 3 DOF of mobility, manual control is more complex than conventional tricycle or buggy car type vehicle. Radio controlled cars usually take one steering and one throttle input to control the vehicle and that is enough for most cases. However, controlling omni-directional vehicle requires more complex control inputs. An Xbox 360 control pad from Microsoft is selected for the manual controller. With two control sticks and triggers the Xbox control pad provides lots of features to the users.

For the purpose of demonstrating the omni-directional control, three different modes of operation are proposed. Figure 4-2 shows how the Xbox control input represents the operation modes.

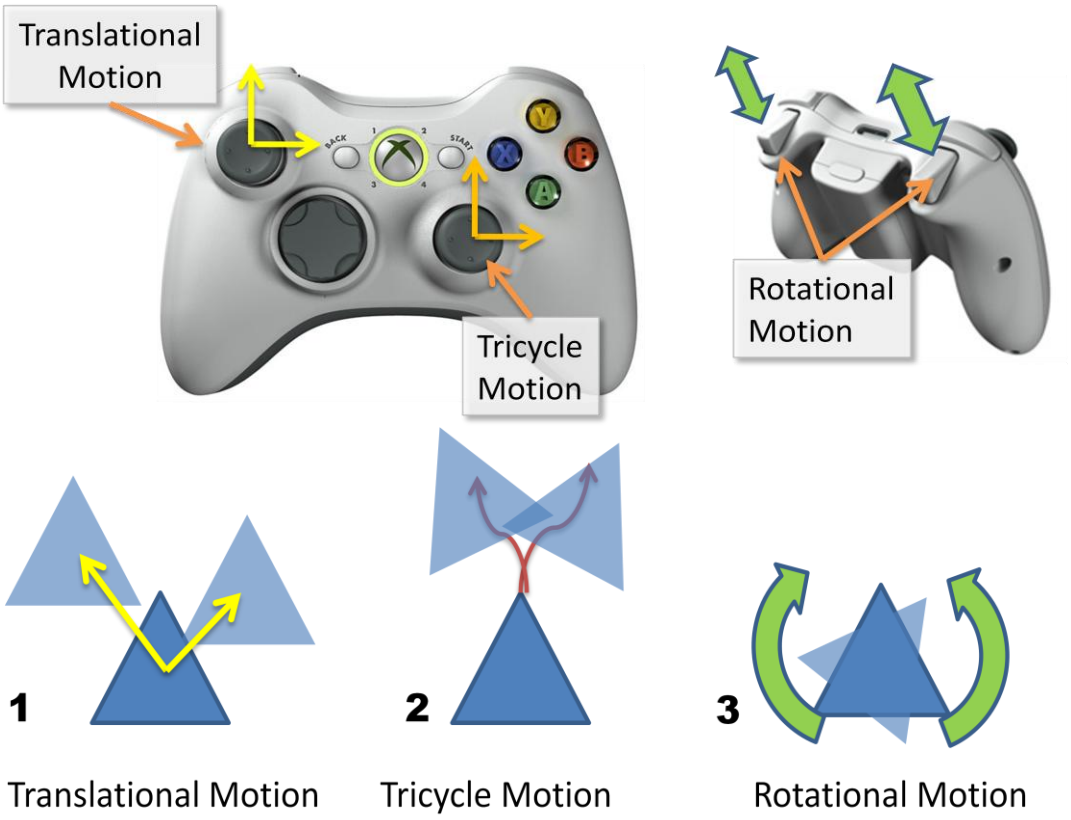

Figure 4-2. Proposed modes of manual operation of the OmniGator

First mode is translational motion. While this mode is selected, all of the three omni-directional wheels are parallel to each other so that the vehicle moves with constant orientation. Left control stick represents the vector of the motion as the direction of the stick represents angle of wheels and magnitude represents throttle of the vehicle.

The second mode is tricycle motion. While this mode is selected, two of three wheels are parallel to each other and the front wheel steers towards the path. Horizontal displacement of the right control stick determines the steering angle of the front wheel and vertical displacement controls throttle input of the vehicle. Also note that if the stick is pulled back, the vehicle moves backwards.

The third and last mode is rotational motion. While this mode is selected, all three wheels are looking at the center of the vehicle making a complete circle and the vehicle is spinning

about the center axis of the body. Trigger input from the controller determines the rate of change of rotation.

CHAPTER 5
TESTING AND RESULTS

Methodology

Fabrication of the OmniGator Control Board

A pilot test board of the OmniGator is fabricated and tested. Figure 5-1 shows how the controller is laid out on the board. Note that the main 48V power supply and computer is not shown here. All components related to controlling the vehicle are laid on a single board. The entire package will eventually be inside of the body platform and the housing is under construction at the writing of this thesis.

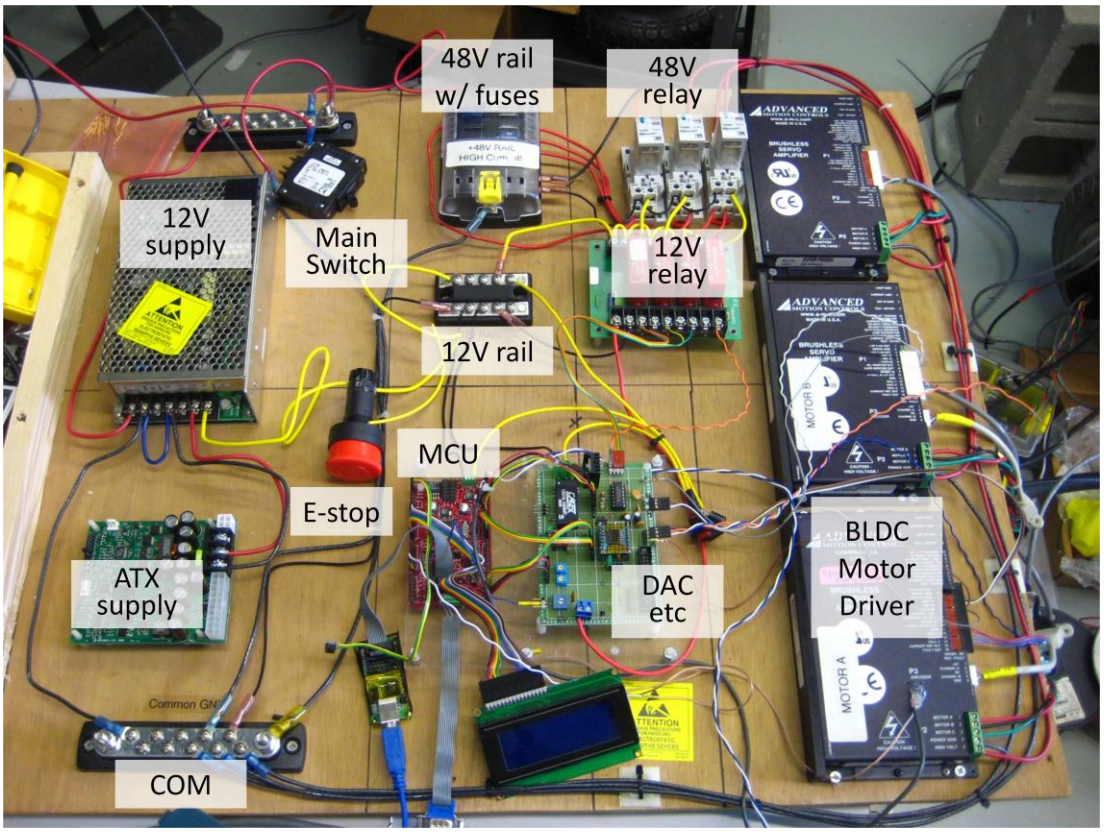

Figure 5-1. Pilot board developed for the vehicle platform

Data Acquisition

Finding the best sets of PID gain requires repetitive trials and errors because different gains affec the results. For the purpose of tuning the wheel motor, a windows program is

developed using C#. The embedded motor controller updates the latest encoder counts per sampling time and report this to the computer at 33Hz through serial port. The program either can directly send a speed command or gradually increasing or decreasing speed command to simulate step input and ramp input respectively. It also can set PID gains of each motors on-line basis.

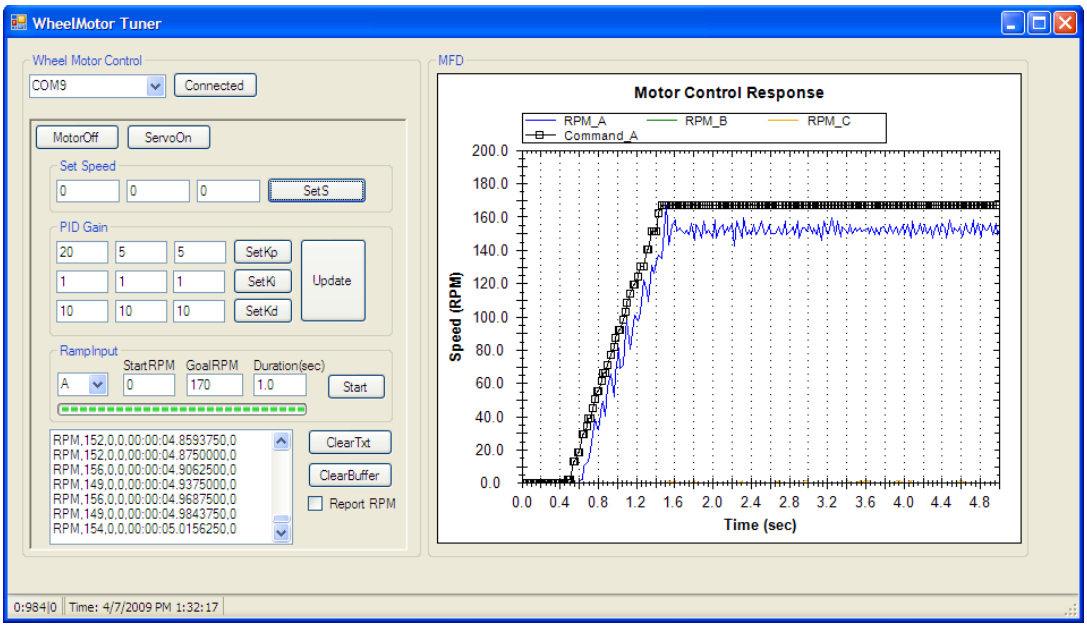

Figure 5-2. Software developed to tune the PID controller

Test Using Dynamometer

In order to test the wheel motor controller, a dynamometer is used to simulate the vehicle is on the ground. The roller used for the test is a solid steel mass with 4.9 inches in diameter and 10 inches in length. This roller weighs about 53.48 pounds or 24.26 kg. The large inertia of this roller well represents how the wheel motor controller will behave when the vehicle is on the ground. Figure 5-3 shows configuration of the dynamometer with wheels attached to the vehicle. Although actual bench mark dynamometer test includes measuring torques while forces applied to the roller, such measuring devices were not available at the time of writing. The micro controller with PID controller measures the velocity of the wheel and reports the RPM data to the

host computer. While the motor is running, various types of external forces applied to the dynamometer and velocity response is monitored.

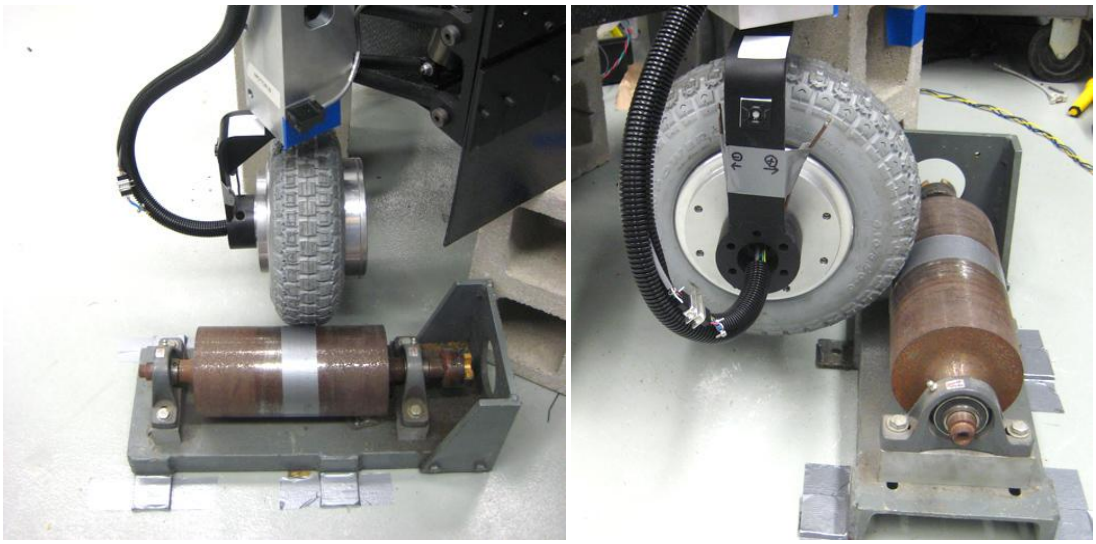

Figure 5-3. Configuration of the dynamometer used for the test

Results

Motor Response Comparison

Before conducting the actual test for the tuning, it is important to know about the characteristics of each motors such as how they behave for certain input, how stable and etc. Different windings of the armature or mechanical defect in gear train may affect the resulting performance of individual motors. For the purpose of this test, no external load is applied to the motors and the same set of gains for the controller were used. Figure 5-4 shows the result from the first test. Each motor name refers to the vehicle configuration mentioned in chapter 1.

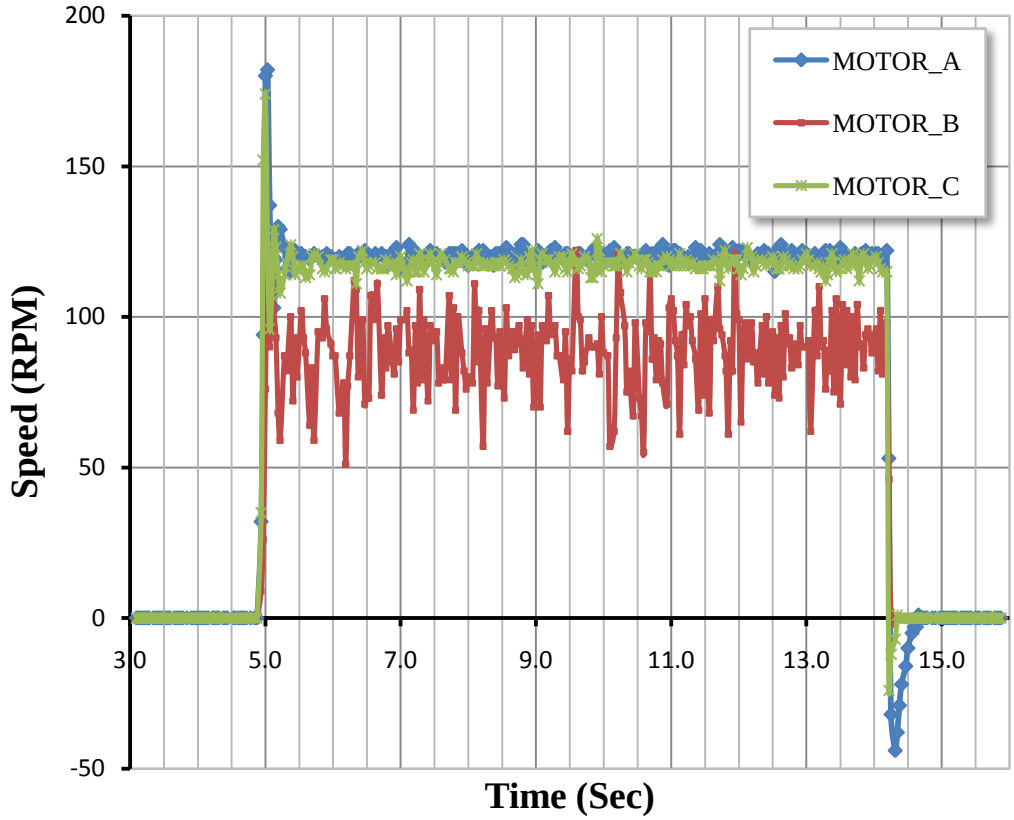

Figure 5-4. Motor comparison test result

The result clearly shows that one of three motor is responding differently from others. Thus, the controller should have different PID gains set.

Tuning the Digital PID Controller

Another series of tests were conducted to find the best gain set for the PID controller. As described earlier, each gain has distinctive effect on the controller performance. In many applications of the PID control, where its dynamics are not well known or defined, the controller gains (K_P, K_I, and K_D) must be determined experimentally [23]. Generally, finding optimized PID gains starts with increasing the proportional gain (K_P) until the target system becomes unstable [24]. Figure 5-5 shows how a proportional gain K_P affects the response of the system.

During the actual test, it was observed that any K_P larger than 40 makes the response unstable. Therefore $K_P=29$ was selected for the wheel motor controller.

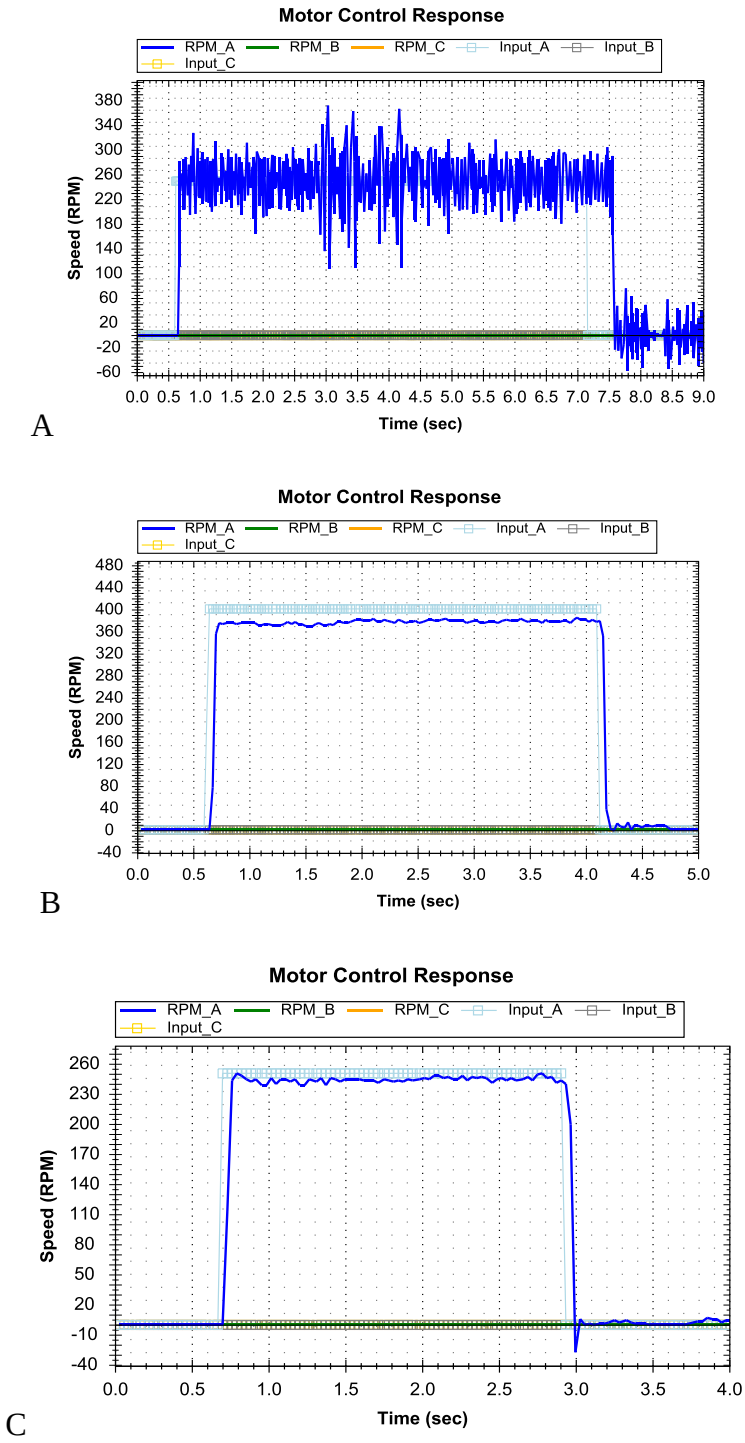

Figure 5-5. Step responses of the PID motor controller for different P gain. A) K_P = 45. B) K_P=10. C) K_P = 29.

Although the found K_P gain made the system to respond faster, certain steady state error was also observed. This may be resulted from internal motor friction or delaying update. It could be resolved by increasing K_I gain of the controller. Since the K_I gain multiplies the summation of all the previous errors, care must be taken when increasing it. Figure 5-6 shows resulting effect of increasing the K_I gain. Some of the steady state errors were removed from the response.

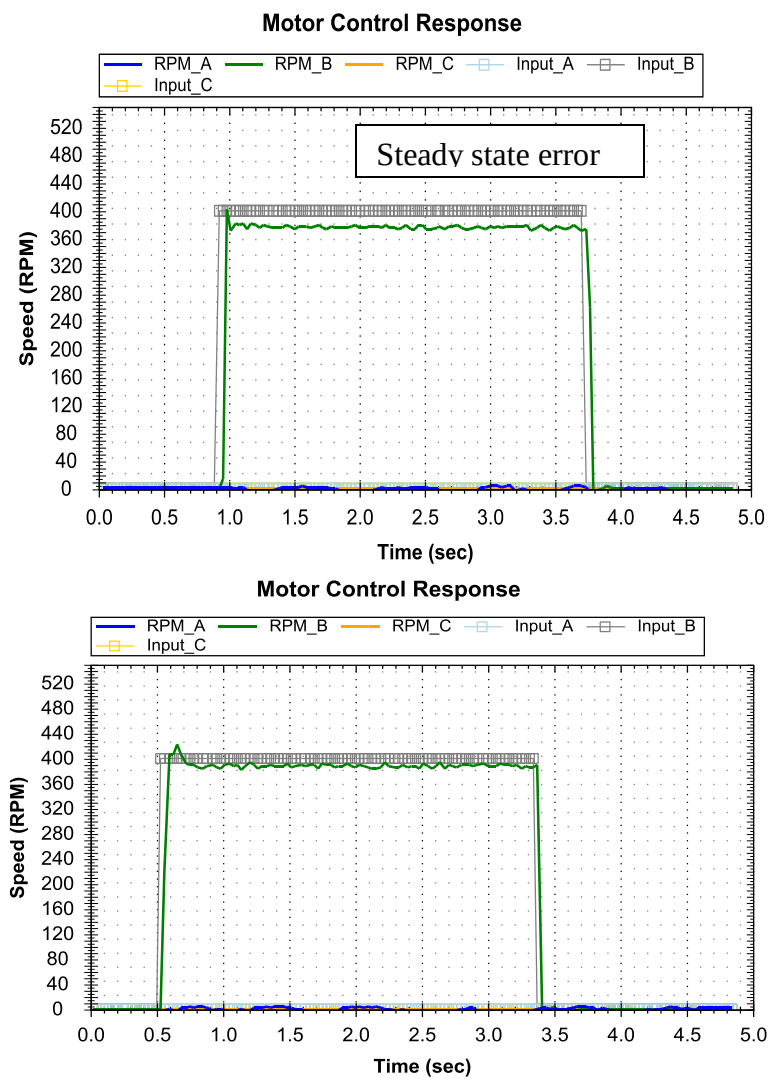

Figure 5-6. Step response of the motor with PI control

In many PID motor control implementations, adjusting K_P and K_I gives acceptable results thus becoming PI controller. However some oscillations may occur during the rising and falling edge of the step input. Similar phenomenon is observed when tuning the controller for motor C.

If such oscillations occur, it can be reduced by increasing small amount of K_D. Figure 5-7 shows how K_D gain affected the response of the motor C. Care must be taken when increasing K_D gain as it may make the controller completely unstable.

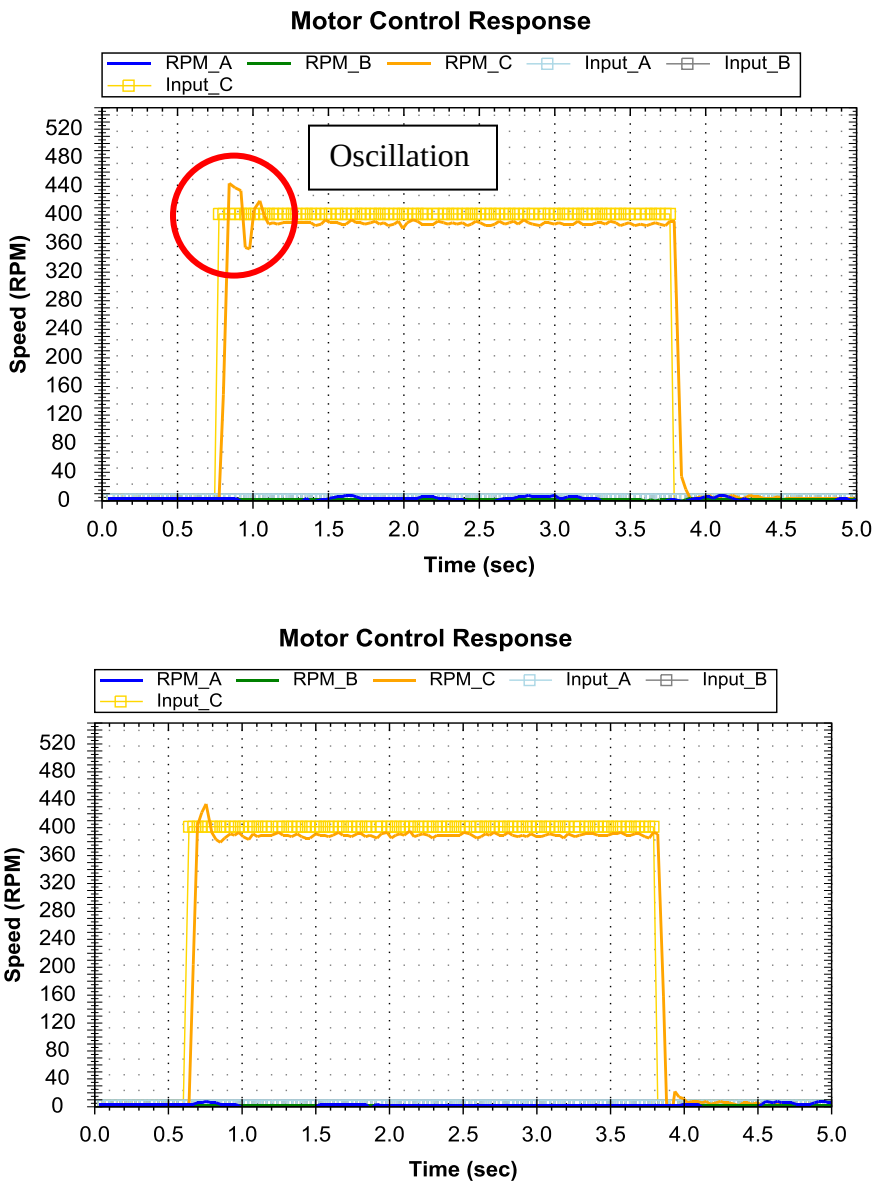

Figure 5-7. K_D gain tuning for motor C

Rest of the tests are relate to the synchronization of the motor. How all three motors well correspond to the input is very critical point for this kind of application. Figure 5-7 shows how they behavior for the same input. The test conducted with gain set of

K_{PA} = 25.0, K_{PB} = 5.0, K_{PC} = 4.0

K_{IA} = 1, K_{IB} = 4, K_{IC} = 1

K_{DA} = 0, K_{DB} = 1, K_{DC} = 5

While testing the motors, the motor B which was assigned as rear left motor, has been identified as having better mechanical assembly. This fact made the PID controller for the motor B can behavior similar to other motors with less K_P gain.

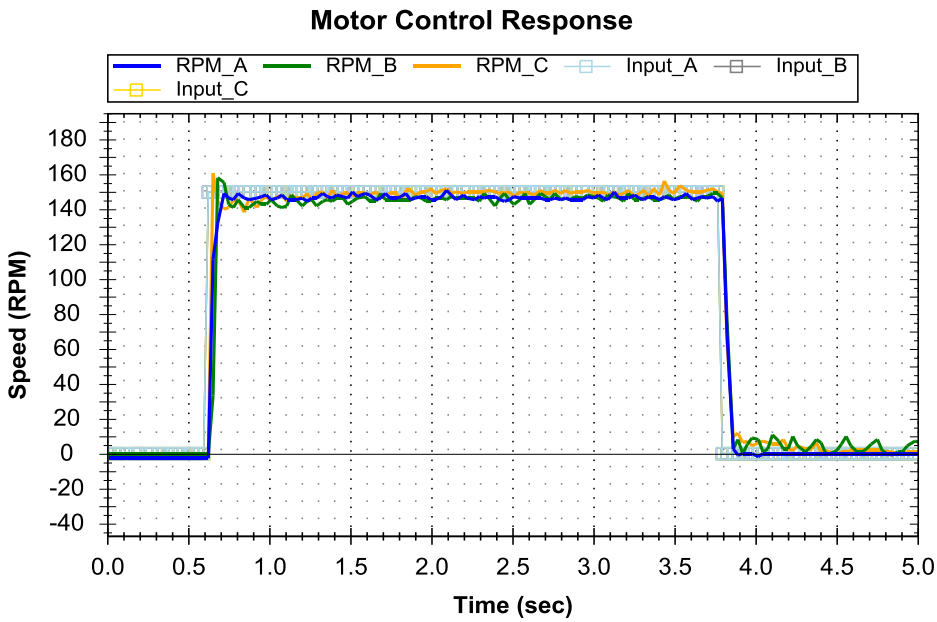

Figure 5-8. Step response of all three motors

CHAPTER 6
CONCLUSIONS AND FUTURE WORK

Conclusions

After months of hard working and testing, an omni-directional vehicle controller was designed and tested. During the development, making the embedded micro controller incorporated with motor amplifier was the most time consuming process. Even after the individual motor is successfully controlled with the control board, synchronizing it with other motors becomes a totally different problem. Especially in this case, the fact that the given motor is fully customized thus have no guaranteed specification, escalates the difficulties. Noise induced from large amount of switching currents affected the entire control system and must be isolated. Finally a PID controller for the omni-directional wheel is developed and tested. Although the PID controller still needs to be tuned, at the time of writing this thesis, it successfully demonstrated the ability to control the omni-directional wheel mechanism.

While the motor controller takes control of the throttling of the platform, three steering motors determine the direction of their respective wheel motor. Procedure for homing and alignment of the steering actuators also considered and tested. Non-contact switch is used for homing and worked well.

Future Work

As the entire HMV research project is still an ongoing project to build an intelligent ground vehicle, the omni-directional vehicle controller has to be incorporated with higher level autonomous systems. Like other autonomous vehicles developed at CIMAR, JAUS architecture will be on top of the autonomous controller and it requires Primitive Drive (PD) for the vehicle control. In order to make the omni-directional vehicle platform to be integrated in to the PD functionality, more research about control method has to be conducted. The omni-directional

controller presented here shows its strength and potential in HMV system however it also brought number of complexity and uncertainty in controlling the vehicle. Kinematic analysis and precise dynamic modeling of the vehicle will help solving such sophisticated control problems.

APPENDIX A

OMNIGATOR CONTROLLER BOARD DESIGN

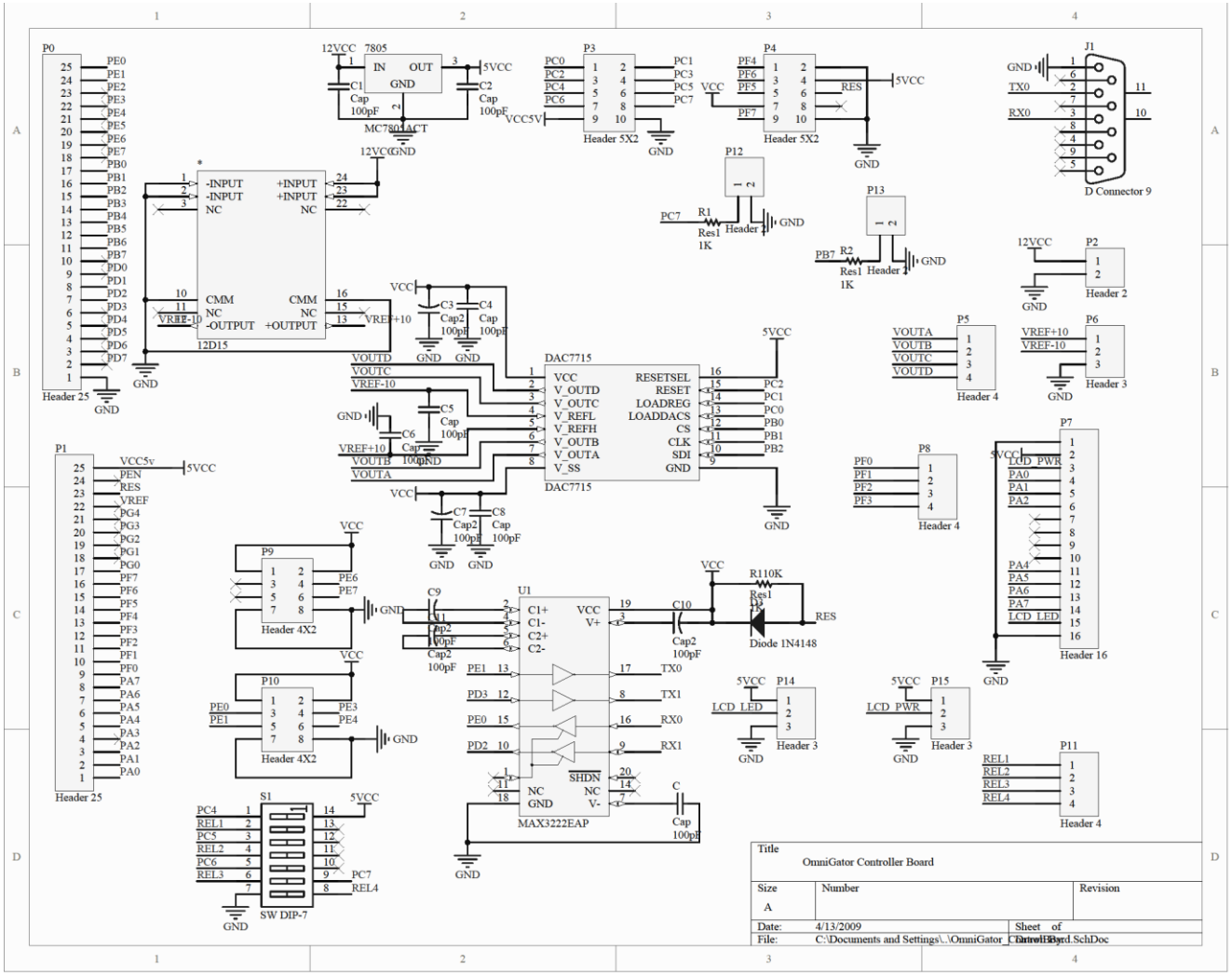

Figure A-1. Schematic diagram of the embedded motor control board.

LIST OF REFERENCES

[1] C. Tobler, "Development of an Autonomous Navigation Technology Test Vehicle," M.S. Thesis, University of Florida, 2004.

[2] C. Fulmer, "The Design and Fabrication of an Omni-Directional Vehicle Platform," M.S. Thesis, University of Florida, 2003.

[3] J. Xiao, "Mobile Robot Locomotion", Capstone Design – Robotics, City College of New York (Last accessed 04/23/2009).

[4] E. Nakano and N.Koyachi, "An Advanced Mechanism of the Omni-Directional Vehicle (ODV) and Its Application to the Working Wheelchair for the Disabled," in *Proc. of Int. Conf. on Advanced Robotics*, pp. 277-284, 1983.

[5] L. D. Stephen,D.L. Brett,"Control of An Omni-Directional Robotic Vehicle with Mecanum Wheels", *IEEE*, Telesystems *Conf.*, vol.1., pp. 323-328, 1991.

[6] K. Yasumasa, M. Takanori, T. Kazuhiko, "Navigation Guidance Control Using Haptic Feedback for Obstacle Avoidance of Omni-directional Wheelchair", *IEEE* Symposium on Haptic Interfaces for Virtual Environments and Teleoperator Systems, pp. 437-444, 2008.

[7] N. S. Kuppuswamy, S. H. Cho, D. Stonier, S. L. Choi, J. H. Kim," Design of an Omnidirectional Robot for FIRA ROBOSOT", *FIRA* Robot World Congress, 2006.

[8] T. Kenjiro, T. Riichiro, "Mechanical Design of "Omni-Ball":Spherical Wheel for Holonomic Omnidirectional Motion", in *Proc. of the 3rd Annual IEEE Conf. on Automation Science and Engineering*, 2007.

[9] W. Masayoshi, "Omnidirectional and Holonomic Mobile Platform with Four-Wheel-Drive Mechanism for Wheelchairs", *Journal of Robotics and Mechatronics*, vol. 19 no.3, 2007.

[10] I. Giovanni, "Swedish Wheeled Omnidirectional Mobile Robots: Kinematics Analysis and Control", *IEEE Transactions on Robotics*, vol 25, no. 1, February 2009.

[11] T. Takahashi, E. Nakano, Y. Mori, and K. Takayama, "A study on the mechanism and control of omni-directional vehicle", in *Proc IROS* 96, pp. 52-59, 1996.

[12] W. Masayoshi, and M. Shunji, "Holonomic and Omnidirectional Vehicle with Conventional Tires", *IEEE Int. Conf. on Robotics and Automation*, April 1996.

[13] The 17TH Annual Intelligent Ground Vehicle Competition (IGVC), "Official Competition Details, Rules and Format", 2009.

[14] M. Hashimotor, N. Suizu, I. Fujiwara, and F. Oba, “Path Tracking Control of a Non-Holonomic Modular Omnidirectional Vehicle”, *IEEE Int. Conf. on Systems, Man, and Cybernetics*, vol 6, pp. 637-642, 1999.

[15] Atmel Corporation, *ATmega128L Summary*, *Rev*. 2467Q-03/08, 2008.

[16] C. T. Kilian, “Modern Control Technology”, Thompson Delmar Learning, 3rd edition, pp 433-488, 2006.

[17] R. Rojas, A. G. Forster, “Holonomic Control of a Robot with an Omnidirectional Drive.”, Kunstliche Intelligenz, BottcherIT Verlag, 2006.

[18] K. Watanabe, “Feedback Control of an Omnidirectional Autonomous Platform for Mobile Service Robots”, Journal of Intelligent and Robotic Systems, vol. 22, no. 3–4, Kluwer, 1998.

[19] Advanced Motion Controls, *AZ Analog Drives for Servo Systems*, Hardware Installation Manual, http://www.a-m-c.com/download/manual/mnalazin.pdf (Last accessed 04/24/2009).

[20] D. E. Barnett, “Encoder Electrical Interface”, http://www.optoresolver.com/help/tutorials/encoder_electrical_interface.htm (Last accessed 04/01/2009).

[21] S. F. Barrett, D. J. Pack, ”Embedded Systems Design and Applications with the 68HC12 and HCS12”, Pearson Prentice Hall,pp 205-251, 2005.

[22] Animatics, *The SmartMotor Series 4 User’s Guide*, *Rev*. 5, 2008.

[23] K. Ogata, “Discrete-Time Control Systems”,1st ed, Prentice Hall, ch 3, 4, 1987.

[24] T. Wescott, “PID Without a PhD”, Embedded.com, http://www.embedded.com/2000/0010/0010feat3.htm (Last accessed 04/13/2009).

BIOGRAPHICAL SKETCH

Kyuhyong You was born on May 1981, in Seoul, the capital city of Korea. He received his Bachelor of Science degree in mechanical engineering from Hanyang University, Seoul, Korea in 2007. While an undergraduate, he organized a club “HART” with school mates to design and build a radio controlled air plane. He began interested in robotics after taking mechatronics and micro processor classes from the same school. Upon graduation he enrolled as a graduate student at the University of Florida in the department of mechanical and aerospace engineering. In 2007, he joined the Center for Intelligent Machines and Robotics (CIMAR) and started his research in robotics with intelligent ground vehicle. He received his Master of Science degree in mechanical engineering with minor in electrical engineering from the University of Florida, in August 2009.

His research interests include control system and embedded controller for autonomous vehicle.