CHAIN REACTION MODEL OF POLITICAL ADVERTISING EFFECTS: ADVERTISING CONTENT, MEMORY, AND CANDIDATE EVALUATION

By

FENG SHEN

A DISSERTATION PRESENTED TO THE GRADUATE SCHOOL
OF THE UNIVERSITY OF FLORIDA IN PARTIAL FULFILLMENT
OF THE REQUIREMENTS FOR THE DEGREE OF
DOCTOR OF PHILOSOPHY

UNIVERSITY OF FLORIDA

2008

To my family

ACKNOWLEDGMENTS

I am deeply indebted to many people in my completion of this dissertation and all the thanks I express herein are meager substitutes for the gratitude and appreciation I owe. Heartfelt thanks go to Dr. Jon Morris (my supervisory committee chair) for his invaluable guidance, mentorship, and the unfathomable emotional support he provided.

For her untiring guidance on research design, I also wish to thank Dr. Lynda Kaid. In addition, this dissertation has benefited immensely from the constructive comments I received from Dr. Jorge Villegas and Dr. David Miller. Without their efforts this would not have been nearly as rewarding an accomplishment.

I would also like to take this opportunity to thank my friends and faculty at the University of Florida, especially Dr. John Sutherland and Dr. Debbie Treise for their mentorship. I also truly thank Dr. Michael Weigold, Dr. Justin Brown, Seth Oyer, Annie Sugar, Sunny Hughes, Kenneth Kim, Tom Mueller, and Michael Clayton for their sincere support.

The love of my parents enabled me to start and complete the otherwise impossible dream of attaining this degree. Without the tireless encouragement of my father and mother, I could not have completed this study. I deeply admire them.

TABLE OF CONTENTS

APPENDIX

LIST OF TABLES

LIST OF FIGURES

Abstract of Dissertation Presented to the Graduate School
of the University of Florida in Partial Fulfillment of the
Requirements for the Degree of Doctor of Philosophy

CHAIN REACTION MODEL OF POLITICAL ADVERTISING EFFECTS:
ADVERTISING CONTENT, MEMORY, AND CANDIDATE EVALUATION

By

Feng Shen
August 2008

Chair: Jon Morris
Major: Mass Communication

Despite conceptual similarity between informational/transformational product advertising and issue/image political advertising, little has been done to connect those two lines of the research. This research attempts to incorporate informational and transformational advertising into the effects of political advertising. To further strengthen the theoretical bond between product advertising and political advertising, a chain reaction model of advertising effects for products is used to identify constructs in testing the effects of political advertising. The psychological process of advertising effects in Positive or Negative and Issue or Image conditions was studied with four latent constructs (i.e., perception of informational cues, perception of transformational cues, emotional response, and candidate electability), and one observed construct (i.e., message recall). With an observation sample size of 1000, and 250 in each experimental condition, the study tested the proposed chain reaction model to account for the dynamics from message learning to candidate evaluation.

The results validate the use of the informational/transformational scale to measure Issue and Image. The results also confirm the conceptual similarity among issue-information-cognition and image-transformation-emotion. The results also indicate that emotional response is a more powerful predictor of candidate electability than cognitive

response. In other words, it is what the respondents feel about the candidate rather than what they remember about the candidate shapes their attitude toward the candidate. Meanwhile, the results suggest that testing the comparative advantages of Positive vs. Negative or Issue vs. Image is likely to be biased by the measurement focus of an attitude scale. Perception of Informational Cues and Transformational Cues impacts message recall, emotional response, and candidate electability in a predictable fashion for the positive issue and image ads and the negative image ad. Nevertheless, the effects in the negative issue ad condition suggest a different model.

CHAPTER 1
INTRODUCTION

Need for the Study

The idea that political candidates can be advertised and marketed in a way similar to products is prevalent in political campaign literature (Baines, Worcester, Jarrett, & Mortimore, 2005; Ben-Ur & Newman, 2002; Bulter & Collins, 1994; Henneberg, 2004; Kotler, 1975; Lock & Harris, 1996; Newman, 2001; Niffenegger, 1989; O'Cass, 1996; Omura, 1979; Schiffman, Sherman, & Kirpalani, 2002; Shama, 1975, 1976; Wring, 1997). All key concepts of consumer marketing had their counterparts in political marketing (Shama, 1976); for instance, a consumer marketing transaction through which sellers exchanged products or services with buyers for sales income was analogous to a political marketing process in which political candidates offered their service and ideas about policy issues to voters for their support (Shama, 1975). The most visible similarity between those two types of marketing was probably the extensive use of advertising by sellers and candidates to inform and persuade target consumers and voters respectively (Shama, 1976). In fact, the ever-increasing importance of political advertising had substantially contributed to the interest in applying consumer marketing theories and practices to political campaigns (Dermody & Scullion, 2001; Kotler, 1975).

The significance of political advertising, particularly television political advertising, was also evident in the magnitude of its expenditure (Devlin, 2005). The last five U.S. presidential campaigns between 1988 and 2004 witnessed a dramatic increase of advertising spending. A total of $79 million was spend on television advertising in the 1988 election (Devlin, 1989), followed by $133 million in 1992 (Devlin, 1993), $173 million in 1996 (Devlin, 1997), $240 million in 2000 (Devlin, 2001), and $620 million in 2004 (Devlin, 2005). The enormous size of spending was not limited to presidential campaigns (Kaid, 2004). In 2004, U.S. political

advertising spending for races at all level accounted for 67.5% of all political media spending and reached $1.85 billion, which was equivalent to a 58.9% increase from 2002 and 112.1% increase from 2000 (Quinn & Kivijarv, 2005). Given the amount of investment in political advertising, it was highly desirable to better understand the impact of advertising (Kahn & Geer, 1994). One line of research examined the verbal content in political advertising and the effect of the verbal content on voting behavior (Kaid, 2004). The verbal content often referred to emphasis, i.e., whether an ad emphasized policy issues or candidate personality, and valence, i.e., positive if the ad supported a candidate or negative if it attacked an opponent (Kaid & Johnston, 2001). The effect often referred to recall of advertising message, candidate evaluation, and intention to vote (Kaid, 2004).

Purpose and Importance of Study

The birth of modern political marketing was indispensable of the use of advertising through mass media (Shama, 1976). The effects of political marketing on voting behavior could be best explained with a chain reaction model of advertising effectiveness that incorporated not only memory of candidate characteristics and issue stands but also candidate evaluation based on voters' memory (Lavidge & Steiner, 1961; Shama, 1976).

As noted above, a substantial body of research investigated the impact of advertising verbal content on memory and candidate evaluation when image and issue were used to support or attack a candidate (Kaid, 2004). Nevertheless, previous research did not generate consistent findings about the impacts of advertising on memory and candidate evaluation. Furthermore, memory and candidate evaluation were often examined as two separate effects, although ad content could influence memory, and memory in turn could influence candidate evaluation in a chain reaction manner (Lavidge & Steiner, 1961; Shama, 1976). Therefore, there was a missing link in previous studies on political advertising.

This research attempts to clarify the effects of issue/image and positive/negative ads on memory and candidate evaluation and explore the relationship between those effects with enhanced measurement of issue and image content and responses to ads. The enhanced measurement of issue and image content is achieved through the introduction of Puto and Wells (1984) informational/transformational survey scale (hereinafter referred to as "the Scale"). The Scale was constructed on the premise that each ad contained both informational and transformational cues, and an ad was regarded as informational if it was perceived to contain more informational cues than transformational cues or as transformational if it was perceived to contain more transformational cues than informational cues (Puto & Wells, 1984). Likewise, an issue political ad contained both issue and image content, but it was the issue information that dominated the content; conversely, an image political ad contained both image and issue content, but it was the image information that dominated the content (Kaid, 2004). The issue content was found conceptually similar to the informational cues and the image content close to the transformational cues (Shen, 2007; Shen & Kim, 2006). Furthermore, issue ads were found to contain more informational cues than transformational cues and image ads were found to contain more transformational cues than informational cues (Shen, 2007). In the current study, the Scale is again used to calibrate the perception of issue and image content in an ad. The perception in turn is used to assess the impact of content on memory and candidate evaluation.

Emotional response was an integral component of candidate evaluation and was measured with bipolar adjective pairs such as happy versus unhappy (Thorson, Christ, & Caywood, 1991). Nevertheless, such an approach was problematic because the use of adjectives led to a distorted reporting process that was subject to an individual's linguistic habits, vocabulary, memory, and social desirability (Lazarus, 1966), and language was too insensitive a medium for

communicating private experiences (Mandler, 1962). AdSAM®(Morris, Woo, Geason, & Kim, 2002), a nonverbal measure of emotional response, is used in this study to assess the emotional component of candidate evaluation with enhanced precision. Moreover, structural equation modeling (SEM) is used to assess the chain reaction starting from the advertising content to candidate evaluation. Additionally, item response theory (IRT) is used to estimate latent responses to the Scale in the current study because IRT was proved an extraordinary tool to capture the cognitive process of responding to survey scales (Embretson & Reise, 2000; Hambleton & Swaminathan, 1985; Linden & Hambleton, 1996; Singh, 2004; Singh, Howell, & Rhoads, 1990).

The enhanced measurement of the content and responses eventually helps answer how issue/image and positive/negative ads influence memory and candidate evaluation and identify a manner in which the verbal content can be managed that will lead to optimal mental processing of political ads and favorable candidate evaluation, which is of vital importance to both practitioners and scholars.

Outline

This dissertation is structured as follows. Chapter 2 reviews the relevant literature regarding the development of political marketing and advertising and the effects of political advertising. The review includes theoretical models of political marketing, the effects of issue and image political advertising, the effects of support and attack political advertising, informational and transformational advertising, and emotional response to advertising. The literature review leads to the formulation of hypotheses and research questions. Chapter 3 details analytic approaches and methodology. Chapter 4 reviews the results of the study. Chapter 5 includes the discussion of the findings and suggestions for future research. Finally, Chapter 6 addresses the contribution of this research.

CHAPTER 2
LITERATURE REVIEW

History of Modern Political Marketing

Although advertising was just the promotion component of marketing, it was often the key to the success of a marketing campaign (Hoyer & Maclnnis, 2004). The importance of mass media and political advertising was also evident in reviews of the development of modern political marketing (Blumenthal, 1980; Kotler, 1975; Maarek, 1995; Nimmo, 1999; Shama, 1976). It was generally agreed that modern political marketing was "a derivative of the post-World War II era… and…evolved in stages" (Nimmo, 1999, p. 75). Nevertheless, a major issue in conceptualizing political marketing, as pointed out by Nimmo (1999), was that researchers often treated "marketing not as a commercial activity but rather as a form of rhetoric" (p. 76). However, Shama's (1976) three-stage framework of political marketing might be an exception because his work was deeply rooted in King's three phases of American business (King, 1965) and was supported by a number of scholars' (Blumenthal, 1980; Maarek, 1995; Nimmo, 1999) vision of modern political marketing.

> These three stages are (1) candidate-orientation, (2) sales-management orientation, and (3) marketing orientation … these stages parallel the development in the orientation of American business as depicted by King … from (1) production orientation whose main concern was to produce large volumes of products, to (2) sales-management orientation whose main concern was to maximize sales through better coordination of production and mass promotion, and finally to (3) a marketing concept orientation whose main concern was to offer goods and services that satisfy consumer needs and wants. (Shama, 1976, p. 766)

Specifically, the first stage "covered the period of 1940 – 1960 … The candidate was viewed as a product needing mass exposure, resulting in increased public awareness which was assumed to be positively connected to voter preference … number of exposures and length of exposures were taken as the key for victory in the campaign" (Shama, 1976, p. 766). Similarly, Maarek (1995) noted that during this time period communication consultants "made massive use of short

advertising spots, strategically broadcast as close as possible to the most popular television shows. In this way…the candidate could benefit, at no extra expense, from the efforts made by the television networks to increase their audience" (p. 13). Many researchers (e.g., Blumenthal, 1980; Maarek, 1995; Nimmo, 1999; Shama, 1976) agreed that the landmark of this stage was the 1952 Dwight Eisenhower campaign. It "was the first to hire an advertising firm in a national contest" (Nimmo, 1999, p. 75).

The candidate/product orientation substantially influenced the development of modern political advertising; for instance, the preference of frequent but short mass exposures led to "growing use of short political ads rather than long political speeches" (Shama, 1976, p. 767) and "the role of the mass media specialists grew from a minor to a major place in the campaign … In most cases those specialists were advertising executives or advertising agencies" (p. 767). Essentially, the production/candidate orientation shared the same powerful media effects assumption with early communication research (Rogers, 1997). "Political marketing of the 1950's … was nothing but promotion and distribution of candidates through increased exposure by mass media" (Shama, 1976, p. 767).

In the second stage of political marketing, "[b]eginning in the early 1960's, political campaigning was viewed and practiced as the selling of candidates" (Shama, 1976, p. 767). "Ad agencies sold candidates like soap" (Blumenthal, 1980, p. 2). The landmark of this sales-management orientation stage was the 1960 John Kennedy campaign (Maarek, 1995; Shama, 1976) because this campaign incorporated all the main elements of sales management, namely "sophisticated voter study … market segmentation, promotion appeals and media selection (Shama, 1976, p. 770)." Voter study was also called field analysis or geodemographics (Maarek, 1995) and included "systematic benchmark surveys of the campaign field, which involve an in-

depth study of voters and inhabitants of the geographical area in which the campaign is to be carried out" (Maarek, 1995, p. 33). Although the surveys could be used for "remodeling existing candidates to appear more congruent with the voters' desires" (Shama, 1976, p. 768), it was impossible for a candidate to satisfy the needs and wants of all voters. As a result, another marketing activity, voter segmentation, was developed to locate "those segments of the general population which might be subject to the influence of political communication" (Maarek, 1995, p. 34) and the candidate could therefore "determine to which groups he would make his maximum adaptation and appeal" (Shama, 1976, p. 768). Voter studies also indicated that voter characteristics such as involvement (Shama, 1976) and selective media exposure (Maarek, 1995) influenced the effectiveness of political communication. Accordingly, promotional strategies in this stage focused on "the effectiveness of different promotion appeals and media in reaching the voters" (Shama, 1976, p. 769).

Many changes in this stage still had substantial influence on today's political advertising research; for example, survey was still be one of the most important research methods (Graber, 2004; Maarek, 1995) and the search for effective appeals and media was manifest in all research initiatives nowadays (Nimmo, 1999). The current study is one of those media effects studies that aim to identify circumstances under which advertising will have the largest impact on voting behavior.

Shama (1976) also commented on the third stage of political marketing and argued "[p]resently, political marketing is experiencing a transition from sales management orientation to marketing orientation … the marketing of political candidates is becoming more … voter oriented … it is the voter who decides which candidate – that is, which 'parcel' of personality, issues, party, etc. – to 'buy' with his vote" (p. 770). There was certain ambiguity about the exact

start of the third stage because of the word "presently" in Shama's (1976) work. Other researchers held that the third stage began with the 1980 Ronald Reagan presidential campaign (e.g., Maarek, 1995; Nimmo, 1999) and this campaign delivered to voters a well-defined parcel about Ronald Reagan: "The candidate was portrayed as having a very clear and simple conservative profile, with a very sparse political platform: reduce taxes and federal government intervention, except for Defense, whose budget was increased" (Maarek, 1995, p. 20).

Another significant change in the third stage was the emergence of "[i]ntegrated political marketing…it involves the simultaneous study, analysis, and segmentation of voters; candidate positioning, and candidate development; promotion and use of media" (Shama, 1976, p. 772). "Combining a series of communications through different channels is much more effective than the single predominant use of the leading audio-visual networks" (Maarek, 1995, p. 62). Interestingly enough, Shama (1976) used a chain reaction model of advertising effectiveness (Lavidge & Steiner, 1961) to define the intended effects of integrated political marketing.

> The multiple output … may be viewed in terms of Lavidge's and Steiner's (1961) advertising model calling for increased (1) awareness of the candidate existence in the political market → (2) knowledge of the candidate's personal and political background, the office for which he is running, his personality traits and the issues he stands for → (3) liking the candidate on the basis of available information about him and possibly on the basis of additionally sought information → (4) preference of the candidate over other candidates running for the same office → (5) a conviction that the candidate is the best available one → (6) support of the candidate by contributions and/or volunteer work and voting. (Shama, 1976, p. 772)

The interest in those above-mentioned effects was well recorded in political advertising research. There were a number of studies on message learning/knowledge/memory (e.g., Geer & Geer, 2003; Martinelli & Chaffee, 1995; Ridout, Shah, Goldstein, & Franz, 2004; West, 1994), candidate evaluation (e.g., Chang, 2001; Kaid, 1991; Kaid, 2001; Kaid & Tecesco, 1999), and voting behavior (e.g., Ben-Ur & Newman, 2002; Faber, Tims, & Schmitt, 1993; Kaid & Sanders,

1978; Weaver-Lariscy & Tinkham, 1996). Nevertheless, there were few studies that investigated the relationships between those effects in a chain-reaction manner. The current study attempts to address the relationships in question, particularly those between content, memory, and candidate evaluation with structural equation modeling.

In summary, political marketing was intertwined with political advertising. Heavy reliance on mass media and advertising practitioners marked the birth of modern political marketing. Media planning, audience research, advertising effectiveness studies, and integration of all those efforts emerged in the development of political marketing and are now the backbone of political campaigns. The literature review above also indicated that 1) content of political ads such as candidate characteristics and issue stands was the key information for voters' decision-making and 2) the perception of the content and candidate evaluation based on the perception were the key predictors of voting behavior. The current study focuses on both the content and its impacts on voting behavior. The section below provides an overview of previous research on those two aspects as recorded in the literature of political advertising.

Verbal Content and Effects of Political Advertising

The verbal content of political advertising was often analyzed in terms of issue versus image and/or positive versus negative (Joslyn, 1980; Kaid & Johnston, 2001). An issue ad focused on the specific policy issues or positions mentioned in an advertisement whereas an image ad focused on a candidate's personal qualities, background, or characteristics (Kaid & Johnston, 2001). A positive ad supported a candidate whereas a negative ad attacked an opponent (Kaid & Johnston, 2001). In real-life practice, the use of issue and image was also associated with support or attack; for example, studies on presidential campaign ads (Kaid, 2002, 2005; Kaid & Dimitrova, 2005; Kaid & Johnston, 2001) indicated that both image and issue ads

were more frequently positive than negative; but in recent years there was a clear trend of more use of negative attack against the opponent, particularly in issue ads.

Issue and Image in Political Advertising

The interest in issue and image in political advertising can be traced back to voting behavior studies since the 1950s. Researchers at the University of Michigan identified party loyalty and group identification as the long-term factors and feelings about candidates and issues as the short-term factors influencing voting behavior in both presidential and congressional elections (Campbell, Converse, Miller, & Stokes, 1960; Campbell, Gurin, & Miller, 1954). Nevertheless, for decades political advertising was criticized for emphasizing image and trivializing issues, and therefore damaging the very foundation of democratic voting, i.e., voting behavior should result from rational decision-making based on policy issues rather than candidate personalities or images (Berelson, 1966). However, studies on political advertising content, especially those on television political advertising content, suggested that such an accusation was largely unfounded or mythical, since political advertising content was largely issue-based (Joslyn, 1980; Kaid, 2004; Kaid & Johnston, 2001).

The dominance of issues television political ads (Kaid, 2004). For example, from 1952 through 1996, 66% of the presidential campaign ads were issue-oriented whereas 34% of them were image-oriented (Kaid & Johnston, 2001). In 2000, 78% of the presidential campaign ads were issue-oriented and 22% of them were image-oriented (Kaid, 2002). In 2004, 85% of the presidential campaign ads were issue-oriented and 15% of them were image-oriented (Kaid, 2005; Kaid & Dimitrova, 2005). Although the percentage of issue ads varied over time, it was below half (47%) only in 1968 (Kaid & Johnston, 2001). The focus on issue was manifest not only in presidential campaigns but also in gubernatorial and senatorial campaigns (Joslyn, 1980; Vavreck, 2001).

Positive and Negative Political Advertising

Negativity was a growing aspect of campaign advertising in the U.S. and the past few election cycles witnessed a real increase in the number of negative spots in presidential campaigns (Kaid, 2004). Although the percentage of negative ads in presidential campaigns from 1952 through 1996 was only about 38% (Kaid & Johnston, 2001), in the last four presidential election cycles in the U.S. (1992, 1996, 2000 and 2004) negative ads made up substantial percentages of the advertising content of both major party candidates. Both of Bill Clinton's campaigns (1992 and 1996) established new highs in the number of negative ads in a presidential campaign with 69% of his ads being negative in 1992 and 68% being negative in 1996 (Kaid, 1994, 1998; Kaid, DeRosa, & Tedesco, 2002; Kaid & Johnston, 2001). Al Gore's presidential campaign used only slightly fewer negative ads; 62% of his ads were negative, compared to 37% of Bush's ads (Kaid, 2002). But Bush resorted to more negative ads (58%) in 2004, as he defended his presidency against challenger John Kerry (Kaid & Dimitrova, 2005).

Negative advertising was also a growing feature of political ads campaign strategy for candidates in election below the presidential level; nevertheless, there was no strong evidence that political advertising was predominantly negative in state and local election campaigns (Kaid, 2004). For instance, Kahn and Kenny (2000) analyzed 594 ads from Senate campaign in 1988, 1990 and 1992 and found that less than half (41%) of all ads contained negative attacks. Vavreck (2001) studied 290 candidate ads in the 1998 elections and found 64% were positive ads. Furthermore, negative ads were usually focused on issues rather than candidate personalities (Johnston & Kaid, 2002; Kaid & Johnston, 2001; West, 1993).

Effects of Political Advertising: Memory

There was certain ambiguity about the impact of image and issue ads on memory as measured by recall. On the one hand, there was some empirical finding that image ads

outperformed issue ads in generating higher recall (Schleuder, 1990). On the other hand, there was evidence supporting the superiority of issue ads over images ads (Kaid, Chanslor, & Hovind, 1992).

The notion that image ads might facilitate recall originated from some previous research about message complexity. First, memory of image and issue ads was influenced by complexity (Natchez & Bupp, 1968; Schleuder, 1990). Second, image ads by nature were less complex than issue ads (Natchez & Bupp, 1968) because image ads contained fewer visual and verbal cues in a commercial per time unit than issue ads (Schleuder, 1990). Third, simple commercials were found to facilitate mental processing and lead to more attention and better memory than complex commercials (Thorson, Reeves, & Schleuder, 1985, 1987); therefore, it should be easier to process image ads than issue ads and to recall content from image ads than from issue ads (Natchez & Bupp, 1968; O'Keefe & Sheinkopf, 1974). Some researchers also argued that an ad, image or issue, could be made simpler or more complex by including fewer or more cues, and complex issue ads might work particularly well for an unknown candidate since voters might be more curious about the new candidate's issue stands (Schleuder, 1990).

In one empirical study designed to test those ideas, Schlender (1990) showed 22 participants four image ads, two for George Bush, a well-known presumed incumbent in the 1988 presidential campaign, and the other two for Michael Dukakis, a nationally unknown challenger in the same campaign, and another 22 participants four issue ads, two for each candidate respectively. The two image or issue ads for each candidate were pre-coded as high or low complexity. In other words, ad type (issue vs. image) was a between-subjects variable, and complexity (simple vs. complex) and candidate type (well-known Bush vs. unknown Dukakis) were two within-subjects variables. Mental processing was the dependent construct and was

indicated by three variables. The first variable was attention to the commercials and it was measured with the participants' secondary task reaction time to periodic tones. Longer reaction time meant more attention to the commercials. The second variable was memory of visual cues and it was measured with a frame recognition test regarding scene change, dissolve, edit, camera pan or zoom, person and object movement, and superimposed image (Schleuder, 1990). Larger numbers of correct recognitions meant better visual memory. The third variable was memory of verbal cues and it was measured with a multiple-choice test about the verbal content including music, voice-over and natural sound, and macro proposition or idea (Schleuder, 1990). Higher scores on the test meant better verbal memory.

Schlender (1990) provided some evidence that image ads were associated with better mental processing. It took the participants watching the image ads longer to respond to the secondary task than those watching the issue ads, and therefore, the image ads attracted more attention than the issue ads. Verbal cues were better remembered for image ads than for issue ads. Nevertheless, memory of visual cues was not influenced by ad type.

The author also explored some interaction effects, but there was lack of consistency in the effects on the three indicators of mental processing. For instance, complexity had no effect on attention for both types of the Bush ads; but low complexity outperformed high complexity in producing more attention to the Dukakis image ads, and high complexity outperformed low complexity in producing more attention to the Dukakis issue ads. By sharp contrast, complexity had no effect on visual memory for both types of the Dukakis ads; but low complexity outperformed high complexity in producing higher recall of the visual cues of the Bush issue ads, and high complexity outperformed low complexity in producing higher recall of the visual cues of the Bush image ads. Finally, complexity had no effect on verbal memory for a particular type

of the Bush or Dukakis ads; but low complexity outperformed high complexity in producing higher recall of the verbal cues of the Bush ads, and high complexity outperformed low complexity in producing higher recall of the Dukakis ads.

Inconsistencies also existed in other comparisons. Candidate type had no effect on attention or verbal memory but some effects on visual memory. The Dukakis ads outperformed the Bush ads in producing higher recall of the visual cues, and the Dukakis issue ads outperformed the Bush issue ads in producing higher recall of the visual cues.

In the absence of any explanation about the inconsistencies in the mental processing, those interaction effects could just be experimental artifacts, or effects caused by the ordering of the ads rather than the characteristics of the ads. In fact, the author was aware of ordering effects when placing four ads one after another within one condition and tried to make the study more realistic by embedding the political ads into a situation comedy with consumer ads. Therefore, Schlender (1990) created two more between-subjects variables, each with three levels for both the order of commercial breaks and the position of each political ad in each break. With those two additional between-subjects variables, there were 18 between-subjects conditions and two or three participants per condition with a total sample size of 44 participants. This small sample size per condition made any comparison among individual ads problematic. The author did not report any analyses about the orders although the orders were part of the study.

The author's research ideas might be theoretically sound, but the way to test the research ideas was methodologically flawed. Additionally, the manipulation of visual and verbal complexity was not indeed successful. The inherent complexity of image and issue ads had a more profound effect on mental processing than manipulated complexity of visual or verbal cues because visually/verbally complex image ads still attracted more attention than visually/verbally

simple issue ads. The only conclusion from the study was that image ads attracted more attention and produced higher recall of verbal cues than issue ads. But even that finding was limited in identifying the exact impact of image and issue ads because it remained unclear whether the verbal cues focused on image or issue or whether the focus varied by ad type.

Interestingly enough, those above-mentioned methodological issues did not exist in the study that favored issue ads (Kaid et al., 1992). The main purpose of the study was to test how the type of TV programs and the type of political ads would influence advertising effectiveness including recall of advertising content. Three types of ads (issue, image, and negative ads from Kit Bond's campaign for the U.S. Senate in Missouri) were inserted into three types of TV programs (situation comedy, drama, and local news) to create nine experimental conditions. A total of 283 participants were recruited on university campus and from local communities and were assigned to the nine conditions. Memory was measured with cued recall rather than recognition tests and the participants were instructed to complete "open-ended questions about the issues and candidate characteristics stressed in the political advertisement" (Kaid et al., 1992, p. 311).

> The open-ended issue question was worded: "What were the major ideas or issues stressed in the political advertisement you saw?" The image question read: "What personal characteristics of Kit Bond were stressed in the political advertisement you saw?" Recall on each item was measured by counting the number of words, phrases, or sentences which constituted distinguishably different ideas. (p. 312)

The results indicated that there was no main effect of program type or interaction effect of ad type by program type on recall, but ad type had a significant main effect on recall. The issue ad outperformed both the image and negative ads in generating higher number of recalled issues and personal characteristics (Kaid et al., 1992).

In summary, image ads were found more memorable than issue ads when measured with recognition of verbal cues in both types of ads (Schleuder, 1990), but issue ads were found more

memorable than image ads when measured with recall of issues and personal characteristics in both types of ads (Kaid et al., 1992). The latter finding had more important implications for political advertising research because the chain reaction model (Lavidge & Steiner, 1961; Shama, 1976) posited an impact of issue and image content rather than verbal or visual content on candidate evaluation and voting behavior. In the current study, the cued recall questions of issue and image content (Kaid et al., 1992) are used to measure memory.

The issue and image ads in the 1992 study (Kaid et al., 1992) were positive ads because the issue ad "dealt with the budget deficit explicitly, with the candidate espousing his views on the subject" (p. 310) and the image ad "similarly discussed the budget deficit, but in more human terms, reflecting the image or persona of the candidate" (p. 310). But it was hard to determine whether the negative ad in the same study was a negative issue or image ad because it "used the budget deficit, but this time as an opportunity to paint the candidate's opponent in a negative light" (p. 310). The positive issue and image ads did not really have their negative counterparts, and there was only one tentative conclusion that favored positive ads in generating more recall of issue and image content.

Nevertheless, there was a substantial body of research that specifically addresses the effects of negative or attack ads and compares negative ad exposure to positive ad exposure (Kaid, 2004). Much of the conceptual framework about negative advertising came from evolutionary psychology (A. Lang, 1991). On the one hand, humans, through evolution, were programmed to assign more attention to negative stimuli for survival (Zajonc, 1984a), and the increased attention led to better memory. On the other hand, humans, by nature, tended to approach positive stimuli and avoid negative stimuli (Fiske & Taylor, 1984), and such a tendency led to increased attention and better memory of positive stimuli. However, there was

no decisive evidence to support either of the two explanations. The actual impact of the valence of ad, positive or negative, on memory became increasingly perplexing when researchers operationalized memory in different manners.

Inconsistent results were found in two studies on radio ads (Geer & Geer, 2003; Shapiro & Rieger, 1992). In one study (Shapiro & Rieger, 1992), two image ads (honesty and leadership) and two issue ads (rent control and financial aid) were created in both positive and negative versions and were used for two races. Each participant listened to either two image or two issue ads for the two races, and one ad was positive and the other ad was negative. Eight experimental conditions were created and 106 college student participants were recruited for the eight conditions.

Memory was measured with cued recall of issues and the participants were instructed to "list all the specific ideas or arguments you can remember from the ad" (Shapiro & Rieger, 1992, p. 140). The results indicated that negative ads outperformed positive ads in generating higher number of recalled arguments, but the order of the ads, image/issue content, and interaction of image/issue content by negative/positive content had no influence on memory (Shapiro & Rieger, 1992).

In another radio ad study (Geer & Geer, 2003), four versions of party ads instead of candidate ads were created, namely negative/positive Republican ads and negative/positive Democratic ads. All the ads were issues ads and contained the same issues. Furthermore, two different copies of the four versions were created to minimize unusual effects of one particular ad, which led to eight experimental conditions. A total of 121 college students were assigned to the eight conditions.

Memory was measured with free recall and the participants were instructed to "write as completely and accurately as possible the political ad that you heard a few minutes ago" (Geer & Geer, 2003, p. 86). The recall was further "divided into 'idea units' … defined as meaningful divisions in the ads … A correct memory unit was the presence in the recall protocol of an idea unit that had been present in the ad" (p. 86). Because party sponsorship was found to have no influence on memory, the party sponsorship variable was excluded and comparisons were made between positive and negative ads only. Contrary to finding in the above-mentioned study (Shapiro & Rieger, 1992), the results indicated that negative ads did not differ from positive ads in generating the number of memory units but positive ads outperformed negative ads in generating more correct memory units (Geer & Geer, 2003).

By sharp contrast, studies on TV ads (A. Lang, 1991; Newhagen & Reeves, 1991) produced consistent results and suggested that negative ads were more memorable than positive ads. In one study (A. Lang, 1991), four positive and four negative ads were used to create four orders of ads and 67 college student participants were assigned to one of the four orders. Memory was measured with three methods, free recall, cued recall, and recognition with multiple-choice test.

For the free recall, the participants were instructed to "write down everything they could remember about the commercials they had seen" (A. Lang, 1991, p. 228). For the cued recall, the participants were "given … a list of the candidates in the commercials. They were told that if this list caused them to remember any commercials they had not previously recalled they should now write everything they could remember about those commercials" (p. 228). For the multiple-choice test, the participants were given "12 questions about each commercial … 6 questions

about information available only in the audio track of the commercial and 6 questions about information available only in the video portion … of the commercial" (p. 228).

The free and cued recall was further coded into visual and verbal ideas. "Visual ideas were defined as any single image recalled from the commercial or any global visual description of the commercial. Verbal ideas were defined as any single thought including names, states, office the candidate was running for, or global audio description" (p. 229). The results indicated that negative ads outperformed positive ads in generating higher number of ideas as indicated in the free recall and more accurate audio-visual memory as indicated in the multiple-choice test.

In another study (Newhagen & Reeves, 1991), a total of 28 ads were shown to 30 adults recruited from the local community. The 28 ads included not only negative/attack and positive/support ads but also comparative ads that were "made to lessen the image of the opponent and promote a positive image of the sponsor as an alternative" (p. 198) within one ad. Those 28 ads were rotated in three orders.

Memory was measured with a recognition test. After watching the 28 ads, the participants were shown a second videotape "that contained pictures and sound bites from the advertisements" (p, 205) and were instructed to "press a 'yes' or a 'no' button to indicate whether the material was from the messages they had viewed" (p. 205). Out of the 28 ads, 18 ads were retained for the analysis with six ads for the three categories. The results indicated that negative ads outperformed both comparative and positive ads in generating more accurate recognition. Nevertheless, there were obviously some methodological issues with that study. First, three orders were not enough to rotate the 28 ads. Second, with three orders and 30 participants, there was only 10 participants each order, which limited the value of order

manipulation. Third, excluding part of the ads based on some preliminary analysis reduced the credibility of the research.

In summary, studies on memory differed from each other in the measurement of memory and the difference in measurements led to mixed results. Two studies (Newhagen & Reeves, 1991; Schleuder, 1990) used recognition tests, and the participants were instructed to judge whether certain verbal, audio, and visual cues were present in the ads they had watched. Although those two studies provided evidence that image ads outperformed issue ads in generating better recognition of verbal cues (Schleuder, 1990) and negative ads outperformed positive ads in generating better recognition of audio-visual cues (Newhagen & Reeves, 1991), there were a number of methodological issues with the two studies. Furthermore, recognition tests were criticized for overlooking "materials in memory not included in the recognition alternatives" (Geer & Geer, 2003, p. 72) and inflating "the rate of accuracy due to successful guessing" (p. 72). Recall was recommended to measure memory because it "allows for the full range of subject's memory to be expressed" (p. 72).

Four studies (Geer & Geer, 2003; Kaid et al., 1992; A. Lang, 1991; Shapiro & Rieger, 1992) used recall, but they differed in the type of ads being recalled, the type of recall being used and the type of cues being recalled. In one study (Kaid et al., 1992), cued recall was used to measure memory of issues and candidate personality in TV ads, and the results indicated that positive issue ads outperformed positive image ads and negative ads in generating higher number of recalled issues and personal characteristics. In another study (Shapiro & Rieger, 1992), cued recall was used to measure memory of issues in radio ads, and the results indicated that negative ads outperformed positive ads in generating higher number of recalled issues. In the third study (Geer & Geer, 2003), free recall was used to measure idea units in radio ads, and the results

indicated that negative ads did not differ from positive ads in generating the number of idea units but positive ads outperformed negative ads in generating more correct idea units. The problem with the third study was the ambiguity of idea units because it remained unclear whether the idea units were about issues or image. In the last study (A. Lang, 1991), cued recall, free recall, and recognition test were all used to measure verbal, audio, and visual cues in TV ads, and the results indicated that negative ads outperformed positive ads in generating higher number of verbal, audio, and visual cues as indicated in the free recall and more accurate audio-visual memory as indicated in the recognition multiple-choice test. Again, it remained unclear whether the cues and memory were about issue or image.

This study uses the chain reaction model of advertising effects (Lavidge & Steiner, 1961; Shama, 1976) and knowledge of issue and image was an important link in the model. Research findings about verbal, audio, and visual cues did not specify whether the cues focused on issue and image; therefore, the findings were not very relevant to the current study. There was strong evidence that issue ads outperformed image ads in generating higher number of recalled issues and personal characteristics (Kaid et al., 1992). Meanwhile, there was certain evidence that positive ads outperformed negative ads in generating higher number of recalled issues and personal characteristics (Kaid et al., 1992), but it remained unclear whether the negative ad in the study (Kaid et al., 1992) focused on issue or image. The exact impacts of issue/image and positive/negative ads are further explored in the current study.

Effects of Political Advertising: Candidate Electability

According to the chain reaction model of advertising effectiveness (Lavidge & Steiner, 1961; Shama, 1976), increased knowledge about a candidate was just the first step of the reaction chain, and the increased knowledge or memory in turn contributed to the formation of voters' opinion on the candidate or the candidate's electability. Quite a few studies explored the impact

of political advertising content on candidate electability. Issues were more socially acceptable for political advertising than image (Roddy & Garramone, 1988; Thorson et al., 1991); therefore, issue ads led to more positive candidate evaluation than image ads (Kaid & Sanders, 1978). Positive ads also led to more positive candidate evaluation than negative ads (Ben-Ur & Newman, 2002; Hill, 1989; Kahn & Geer, 1994).

In one study (Thorson et al., 1991), the researchers selected four TV ads for each of four candidates, i.e., one positive issue ad, one positive image ad, one negative issue ad, and one negative image ad for each candidate. The researchers also created 16 orders of 13 ads, with one ad from each of the four candidates, one filler political ad, and another eight filler consumer TV ads. With a sample size of 161 participants, each order had about ten to eleven participants.

In that study, memory was also examined and was measured with a recognition test. The participants were asked to indicate whether certain facts really contained in the ads. Those facts included "issues (or image qualities) … office for which the candidate was running, the state, and other people referred to in the ad" (p. 474). Candidate electability was examined with four variables. The first variable was ad attitude and was measured with eight 9-point bipolar adjective pairs. The eight items were " believable … unbelievable; persuasive … unpersuasive; like … dislike; pleasant … unpleasant; truthful … deceptive; accurate … inaccurate; ethical … unethical; good … bad" (p. 474). The second variable was attitude toward the candidate and was measured with nineteen 9-point bipolar adjective pairs. Through a factor analysis, seven of the 19 adjective pairs were used to indicate candidate character, and the remaining 12 items were used to indicate candidate ability. The seven items about candidate character were "warm … cold; emotional … unemotional; friendly … unfriendly; compassionate … uncompassionate; kind … unkind; honest … dishonest; and sincere … insincere" (p. 476). The 12 items about

candidate ability were "stimulating … boring; articulate … inarticulate; weak … strong; stupid … smart; persuasive … unpersuasive; experienced … inexperienced; and active … passive" (p. 476). The third variable was the pleasure dimension of emotional response (Russell, 1978) and was measured with six 9-point bipolar adjective pairs. The six items were "hopeful … despairing; pleased … annoyed; happy … unhappy; relaxed … bored; satisfied … unsatisfied; contented … melancholic" (Thorson et al., 1991, p. 475). Fourth variable was the arousal dimension of emotional response (Russell, 1978) and was measured with another six 9-point bipolar adjective pairs. The six items were "stimulated … relaxed; wide awake … sleep; excited … calm; frenzied … sluggish; jittery … dull; aroused … unaroused" (Thorson et al., 1991, p. 475). Voting intent was measured with a 9-point bipolar adjective scale ranging from "very likely" to "very unlikely." Additionally, familiarity was measured with a 7-point bipolar adjective scale ranging from "familiar" to "unfamiliar," and it turned out that all the four candidates were unfamiliar to the participants.

In the analysis, political ads from different candidates and in different orders were collapsed into either image or issue category. There was no difference in the memory of ad content between image and issue ads. There was also no difference in arousal between image and issue ads. Nevertheless, issue ads outperformed image ads in producing more positive ad attitude, overall candidate attitude, candidate character, candidate ability, voting intention, and higher pleasure.

The ads were also collapsed into either positive or negative category. Positive ads outperformed negative ads in generating better memory. Positive ads also outperformed negative ads in generating more positive ad attitude, overall candidate attitude, candidate character, higher pleasure, and lower arousal. There was no difference in candidate ability or

voting intention between positive and negative ads. There was also no interaction effect of image/issue by positive/negative on memory, candidate evaluation, or voting intention.

However, the study itself had a few problems. First, similar to the Schlender study (1990), order was part of the experimental design, but no tests on ordering effects were performed. In each order, the participants watched all the four types of ads; but the researchers used ANOVA as if the ad type had been a between-subjects variable, and they did not report the degree of freedom of ANOVA. Second, it remained unclear how a 9-point pleasure and arousal scales resulted in mean scores ranging from -.83 to .20 (Table 1, p. 478). The researchers did not provide any explanation about the difference in scoring. Third, although there were significant differences between issue and image ads and between positive and negative ads in candidate evaluation measures, the scores for those ads were well above the mid-point of their corresponding 9-point scales and the actual differences ranged from .23 to .39 (Table 1, p. 478). The statistical significance could be inflated because the scores were collapsed into either the image/issue or the positive/negative category and each paired comparison involved the same 161 participants. In other words, that study did not provide convincing evidence about the true difference in candidate evaluation between issue and image ads or between positive and negative ads for unknown candidates. Finally, it remained unclear what kind of emotional response was measured. The researchers did not indicate whether it was response to the ads or to the candidates.

In another experimental study, Kahn and Geer (1994) tried a different approach. They used between-subjects design and compared candidate evaluation toward four types of TV ads, i.e., issue/image by positive/negative ads, from one unknown candidate's political campaign. Besides creating the first four experimental conditions in which the participants only watched

one type of ads, the researcher also created another five conditions in which the participants watched 1) positive image and issue ads supporting the candidate, 2) negative image and issue ads sponsored by the same candidate, 3) a positive image ad of the candidate and a negative image ad sponsored by his opponent, 4) a positive issue ad of the candidate and a positive issue ad of his opponent, or 5) a negative image ad sponsored by the candidate and the negative image ad sponsored by his opponent. With a sample size of 303 participants, each condition had about 24 to 39 participants.

The authors also used candidate competence and characteristics to assess candidate electability. Candidate competence was measured with a 6-point adjective scale ranging from very competent to very incompetent. The same scale was used to assess competence in three issues including education, health, and economy. Education was the focus of the issue ad. Health and economy were added because the researchers believed that those two were the central concerns for most political campaigns. Candidate traits was measured with a 4-point scale ranging from "a great deal" to "not at all." The same scale was used to assess four traits, i.e., trustworthy, strong leadership, hardworking, and knowledgeable. The participants were also asked to indicate their intention to vote for the candidate on a 4-point scale ranging from "very likely" to "not at all likely."

There was certain level of inconsistency between evaluation measures. Except for the negative image condition of the first four conditions, the evaluation scores of issue competence and personality were all above their corresponding scale midpoints by .01 to 1.01 point (Table 2, p. 103) and were slightly favorable to the candidate. Nevertheless, the overall evaluation scores were not significant across the four conditions.

Although interaction effects of issue/image by positive/negative were testable with the experimental design, there was certain ambiguity about the existence of those effects. On the one hand, the authors did not mention including an issue/image by positive/negative interaction term in their ANOVA. On the other hand, their comparison of the first four conditions seemed to suggest the existence of some interaction effects. Positive ads outperformed negative ads in producing higher evaluation toward the candidate's issue competence in education and economy and the candidate's personality as a strong leader. When comparisons on the same issue competence and personality were made within positive ads, issue and image ads did not differ in the evaluations. But when the same comparisons were made within negative ads, issue ads outperformed image ads in generating higher candidate evaluations.

The authors asked the participants to evaluate the candidate on three issues. The results regarding education seemed reasonable since education was the focus in the issue ads. It remained unclear why there was significant difference in response to economy but no difference to health after the participants watched an issue ad about education. The authors also asked the participants to evaluate the candidate on four personality traits. There was significant difference only in the evaluation of the candidate's leadership. It remained unclear why the content had no effect on the other three traits. Finally, although positive ads worked much better than negative ads in enhancing issue competence and personality evaluation, the negative issue ad in fact produced significantly higher voting intention than the other three ads.

The authors showed participants two ads in another five conditions. Comparisons were made between the impact of one ad and the cumulative impact of two ads. Two positive ads together produced higher evaluation toward issue competence in education and personality as knowledgeable, higher and above midpoint overall candidate evaluation, and higher intention to

vote than one positive issue ad or one positive image ad only. Nevertheless, exposure to more positive ads did not enhance candidate evaluation toward issue competence in health and economy and personality trait as trustworthy, hardworking, and strong leadership.

Comparisons were also made for negative ads. Two negative ads sponsored by the candidate produced lower evaluation toward personality as trustworthy than one negative issue ad or one negative image ad only. Those two negative ads together also resulted in lower intention to vote for the candidate than one negative issue ad. Surprisingly, those two negative ads together in fact resulted in higher intention to vote for the candidate than one negative image ad. No additional differences were found with regard to the other aspects of the candidate issue and personality evaluation.

The authors also showed some participants both a positive image ad of the candidate and a negative image ad sponsored by the candidate's opponent. The second ad from the opponent had no effect on the evaluation toward and intention to vote for the candidate. They also showed other participants both a positive issue ad of the candidate and a positive issue ad of the candidate's opponent. Again the second ad from the opponent had no effect on the evaluation toward and intention to vote for the candidate. Nevertheless, when a negative image ad sponsored by the candidate's opponent was shown after a negative image ad sponsored by the candidate, the candidate's evaluation in terms of his personality as trustworthy, strong leadership, and knowledgeable was significantly reduced than when the negative image ad sponsored by the candidate was shown only. In other words, showing the participants the candidate and the candidate's opponent attacking each other on image with two ads was the most likely to lower the evaluation of the candidate than showing the participants only one negative image ad sponsored by the candidate.

In summary, some researchers (Thorson et al., 1991) found that issue ads generated more positive candidate electability than image ads for unknown candidates, and other scholars (Kahn & Geer, 1994) argued that issue ads did not differ from image ads in influencing candidate electability for unknown candidates. However, previous research (Kahn & Geer, 1994; Thorson et al., 1991) consistently indicated that positive ads outperformed negatives ads in generating more positive candidate electability. Furthermore, there was evidence (Kahn & Geer, 1994) that negative issue ads outperformed negative image ads in generating more positive candidate electability, and showing negative image ads sponsored by both a candidate and the candidate's opponent was more likely to lower the electability of the candidate than showing only one negative ad sponsored by the candidate.

The notion of electability is conceptually similar to the construct of attitude. A number of attitude studies employ a tripartite framework, which includes cognition, affect, and conation as the three components of attitude (Greenwald, 1989; Morris, Woo, Geason, & Kim, 2002). The cognitive element includes beliefs stored and retrieved from memory (Hoyer & Maclnnis, 2004; McGuire, 1989). The affective element includes evaluative judgment and personality assessment (Aaker, 1997; McGuire, 1989). The conative element includes behavioral intention (Fishbein & Ajzen, 1975; Fishbein & Ajzen, 1980; McGuire, 1989). Those three components have been used in previous research on political advertising, e.g., beliefs about issue competency (Kahn & Geer, 1994), candidate personality (Kahn & Geer, 1994; Thorson et al., 1991), and voting intention (Kahn & Geer, 1994). In the current study, those three variables will be used to create a composite measure of candidate electability.

Summary of the Effects of Political Advertising

A few empirical studies (Geer & Geer, 2003; Kahn & Geer, 1994; Kaid et al., 1992; A. Lang, 1991; Newhagen & Reeves, 1991; Schleuder, 1990; Shapiro & Rieger, 1992; Thorson et

al., 1991) were reviewed in great detail. Those studies did not provide consistent evidence of the effects of political advertising on memory and candidate electability. The inconsistency could be caused by different operationalization of memory and candidate evaluation, different content of ads, and certain methodological problems in some studies. There was lack of specification of the exact content being measured, for example, the focus of visual, audio, and verbal cues (A. Lang, 1991; Newhagen & Reeves, 1991; Schleuder, 1990), and the target of emotional response (Thorson et al., 1991).

Additionally, based on the chain reaction model of advertising effects (Lavidge & Steiner, 1961; Shama, 1976), memory and candidate electability were not two types of separate effects. Memory of an ad could influence voters' opinion on the electability of the candidate advertised in the ad. A few measures were developed to measure memory of issues and candidate characteristics (Kaid et al., 1992) and candidate competence, personal traits, and voting intention (Kahn & Geer, 1994). But those measures were not incorporated into one study to test the chain reaction model. This missing link in previous research is investigated in the current study with a path analysis. More details about the path analysis are in Chapter 3.

Informational and Transformational Advertising

Previous research identified five antecedents that influenced the use of informational or transformational advertising (Swaminathan, Zinkhan, & Reddy, 1996). The relevance of those five antecedents to political advertising was assessed in a prevous study (Shen & Kim, 2006).

Antecedent 1: Newness of the Product

Consumers often have a need to search for information to identify and evaluate a new product category (Cohen & Basu, 1987). But when consumers became well informed, their information need declined and their evaluation of the product category was largely based on actual experience of the product (Swaminathan et al., 1996). The same idea was also found in

some discussion about the relationship between the use of informational or transformational advertising and product life cycle (Porter, 1985). In the early stages of a consumer product, informational advertising was recommended to communicate factual information of the product; whereas in the late stages, transformational advertising was recommended to communicate use experience of the product (Porter, 1985). Newness of product was relevant to political advertising (Shen & Kim, 2006). An unknown challenger, or a candidate in the early stage of his or her political life, tended to build awareness through informational advertising, whereas a well-known incumbent, or a candidate in the late stage of the political life, tended to capitalize voters' positive experience with his or her first term through transformational advertising (Schleuder, 1990).

Antecedent 2: Level of Risk

In the context of consumer behavior, risk referred to the uncertainty encountered by consumers when they were estimating the social and economic consequences of a purchase decision (Swaminathan et al., 1996). Risk was associated with product newness and information search (Hoyer & MacInnis, 2004). A new product was perceived riskier than a familiar product; therefore, if consumers had to make a decision between the two, one way to make a less risky decision was to make an informed decision through adequate information search (Darke, Freedman, & Chaiken, 1995). Additionally, decision-making literature points out that risk was often associated with involvement (Hoyer & MacInnis, 2004).

Antecedent 3: Product Involvement

In the context of consumer behavior, involvement referred to the extent to which a product had important consequences for consumers to form an informed opinion and to justify their purchase decisions (Chaiken, 1980). Expensive products resulted in both strong perception of risk and high involvement with the products (Hoyer & MacInnis, 2004). Voters highly involved

with a political election might believe that their votes would have a significant impact on their society and tended to search for adequate information to make a well-informed decision (Nimmo, 1999). Therefore, for those voters, informational advertising might be the only appropriate approach. In fact, there was evidence that for voters who were interested in or involved with political campaigns, their candidate evaluation was primarily determined by issue advertisements rather than image advertisements (Christ, Thorson, & Caywood, 1994).

Antecedent 4: Product Conspicuousness

In the context of consumer behavior, product conspicuousness referred to the intended communication role played by certain consumption decisions (Belk, Balm, & Mayer, 1982). In other words, consumers expressed themselves through purchasing and using products that were congruent with their self-images (Swaminathan et al., 1996). Therefore, the purchase decision was based on real or upcoming experience of using the product or the transformational aspect rather than the hard facts or the informational aspect of the product. In the context of political advertising, a candidate could use transformational advertising to reinforce support from voters who had positive experience with the candidate and felt well connected to the candidate (Shen & Kim, 2006).

Antecedent 5: Product versus Service

In the context of consumer behavior, intangibility was a fundamental difference between product and service (Swaminathan et al., 1996). Because consumers could not perceive service in the same manner in which consumers could sense products (Zeithaml & Bitner, 1996), transformational advertising was used to present service offering with real-person experience of the service (Swaminathan et al., 1996). At first glance, political office might be closer to the concept of intangible service than tangible product, which made transformational advertising a better match to political campaigns (Shen & Kim, 2006).

However, research on intangibility suggested that although service itself might be highly intangible, the service delivery system was well tangible (Mittal, 1999). Similarly, although the political service a candidate would provide may be highly intangible, the candidate himself or herself, as the core service delivery system, was well tangible (Shen & Kim, 2006). Basic facts about the candidate were crucial for voters to make an informed decision (Nimmo, 1999). Therefore, informational advertising was still an appropriate approach to political campaigns although political campaigns essentially aimed to sell candidates' political service (Shen & Kim, 2006).

Typology of Informational/Transformational Strategies

Previous research identified five informational strategies and four transformational strategies in consumer advertising (Laskey, Day, & Crask, 1989). Again those items were examined in the context of political advertising for relevance assessment in a previous study (Shen & Kim, 2006).

The first informational item, comparative, referred to "competition explicitly mentioned" (Laskey et al., 1989, p. 38). It was relevant to political advertising because in political advertising, especially in negative political advertising, explicit mention of opponent was basically a common practice (Shen & Kim, 2006). The second item, preemptive, referred to "testable claim of superiority based on an attribute or benefit" (Laskey et al., 1989, p. 38). It was also relevant because in political advertising, there were often statements about a candidate's previous performance in office and/or issue stands, which should be testable or verifiable and could help indicate that candidate's superiority to other candidates (Shen & Kim, 2006). Nevertheless, one risk of using the preemptive strategy was that the same record could also be framed negatively and be used in an opponent's attack ads (Nimmo, 1999). In fact, negative/attack ads focused more on issues than on image (Johnston & Kaid, 2002; Kaid &

Johnston, 2001; West, 1993). Certain actions based on inoculation theory of persuasion (Anderson & McGuire, 1965), such as warning of imminent attack from the opponent followed by a weak version of such an attack, should be taken if some political records were likely to cause controversies. The third item, hyperbole, referred to "un-testable claim of superiority based on an attribute or benefit" (Laskey et al., 1989, p. 38). It was also relevant because in political advertising, there were also superiority claims about new initiatives to be implemented but those new initiatives were largely un-testable at the moment they were proposed (Shen & Kim, 2006). The fourth item, unique selling proposition, referred to "explicit claim of uniqueness" (Laskey et al., 1989, p. 38) and involved heavy use of the word or concept of "only" (p. 38). It was, however, not really relevant because in the U.S. elections, the influence of independent candidates was so limited that the competition was primarily between the two candidates from the Republican Party and the Democratic Party respectively (Devlin, 2001). Because there were just two candidates, any comparisons between the two automatically involved the concept of "only" (Shen & Kim, 2006). Including this strategy might lead to possible confusion with other informational items that emphasized the superiority of a candidate, for example, pre-emptive and hyperbole (Shen & Kim, 2006). Generic, the last informational item, referred to "focus on product class" (Laskey et al., 1989, p. 38). It was also not relevant because there was no such a concept of generic candidate in political advertising (Shen & Kim, 2006).

The first transformational item, user image, focused on "the users of a brand and their lifestyles" (Laskey et al., 1989, p. 39). It was relevant because some political advertisements did show how the life of certain type of voters or "users" of a political candidate's service would be influenced either positively or negatively by their decision to choose a candidate (Shen & Kim,

2006). The second item, brand image, focused on "the image of the brand itself in an attempt to convey a brand 'personality'" (Laskey et al., 1989, p. 40). It was also relevant because in political advertising, and it was again a common practice to emphasize the personality or characteristics of a candidate (Shen & Kim, 2006). The third item, use occasion, focused on "the experience of using the brand, or on those situations where use of the brand is most appropriate … [or] the 'fit' between the brand and the situation; not the fit to a particular user profile" (Laskey et al., 1989, p. 40). It was also relevant because some political advertisements did show scenarios that suggested the appropriateness to choose a candidate for a particular issue rather than for a particular type of voters (Shen & Kim, 2006). Generic, the last transformational item, again focused on "the product class rather than on a particular brand" (Laskey et al., 1989, p. 40). This item was not relevant because there was no such a concept of generic candidate (Shen & Kim, 2006).

Summary

In summary, the antecedents to the use of information or transformation for consumer advertising were well applicable to political advertising. Furthermore, three out of the five informational strategies and three out of the four transformational strategies were relevant to political advertising. In fact, the three informational strategies and three transformational strategies were used to code the issue and image content in political advertisements (Shen & Kim, 2006). Issue political ads were found to contain more informational strategies than transformational strategies, and image political ads were found to contain more transformational strategies than informational strategies. Nevertheless, content analyses on issue and image in political advertising might be of little use if there was a lack of reliable and valid methods to measure voter's perception of the content and identify the impact of the perception on candidate evaluation (Shen, 2007). In the current study, the Puto and Wells (1984)

informational/transformational survey scale (hereinafter referred to as "the Scale") is used to better understand the perception and impact in question.

Survey Scale of Informational/Transformational Advertising

The Scale had 23 items. Eight of them measured the perception of informational cues (hereinafter referred to as "PIFC") in an advertisement and were developed from previous research on the informative function of advertisements (Aaker & Norris, 1982; Resnik & Stern, 1977). The other 15 items measured the perception of transformational cues (hereinafter referred to as "PTFC") and were developed from viewer response profile measures (Schlinger, 1979) and Needham, Harper, and Steers Advertising's communication measures. The Scale was by far the most popular measure of informational/transformational advertising and was used for more than two decades (Menon, Goodnight, & Wayne, 2006), although survey scales of this type were criticized for being limited in capturing transformational experience and should be replaced by open-ended projective techniques with pictures or narratives (Aaker & Stayman, 1992).

In the original validation study, Puto and Wells (1984) first coded 400 TV commercials based on the definitions of informational and transformational advertising. Out of those 400 commercials, they selected five primarily informational commercials and eight primarily transformational commercials. Next, 130 college students watched the 13 commercials and responded to the survey scale to report PIFC and PTFC of the commercials. The average responses of the 13 TV commercials were analyzed to assess the performance of the Scale. A set of Cronbach's reliability tests indicated that the eight informational survey items reached an average reliability of .73 and the 15 transformational survey items reached .88. A set of *t*-tests was used to compare the difference between each commercial's PIFC and PTFC scores. The difference was significant for all the commercials and the higher score was in complete

agreement with the prior coding as whether the commercial was primarily informational or transformational.

Unfortunately, the validation study itself was not flawless. The participants watched all the 13 commercials and responded to the same scale 13 times, but the researchers used *t*-tests rather than repeated measures for this within-subjects design. Moreover, since Cronbach's reliability test was known to favor scales of larger numbers of items even with the same degree of inter-item correlations (Hair, Anderson, Tatham, & Black, 1995), the Scale was likely to be in favor of the transformational items because those items almost outnumbered the informational item by 2 to 1. Meanwhile, because the Scale had six points from "Strongly Agree" to "Strongly Disagree," the participants were forced to make a sided choice and could not indicate a neutral stand. Finally, the participants were also asked to report prior exposure and evaluation of the commercials, but the relationship between those measures and the Scale was not analyzed in that validation study.

In one recent study of using the Scale for political ads (Shen, 2007), a few changes were made to the Scale; for example, "brand" was replaced with "candidate" and "company" with "party," and a mid-point category "neither agree nor disagree" was added to the Scale to form a 7-point scale, ranging from "strongly disagree" to "strongly agree." That study indicated that the PIFC score of an issue ad was significantly higher than its PTFC score, whereas the PTFC score of an image ad was significantly higher than its PIFC score. The result provided additional evidence to support the conceptual similarity between issue/image ads and informational/transformational advertising. The Scale is also used in the current study with the changes of the wording and scale points made in the previous study (Shen, 2007).

Emotion in Advertising

The informational content of advertising was also called the cognitive dimension of advertising (Puto & Wells, 1984). Content of this dimension included verbal messages such as rational and logical arguments as well as non-verbal information such as visual imagery, music, and language variables that complemented the verbal messages (Wells, 1988).

The transformational content of advertising was also called the experiential dimension or essentially the emotional dimension of advertising because transformation occurred only when consumers explicitly associated certain emotional feeling to the use of an advertised brand (Puto & Wells, 1984). Content of this dimension included emotional appeals to induce a wide variety of human emotions (Wells, 1988).

Emotional appeals in advertising were often classified into positive and negative appeals (Hoyer & MacInnis, 2004). Empirical research has addressed the effects of positive appeals such as happiness (Lazarus, 1991a), hope (MacInnis & de Mello, 2005), humor (C. Duncan & Nelson, 1985; Gelb & Pickett, 1983), pride (Lazarus, 1991a), and warmth (Aaker, Stayman, & Hagerty, 1986) as well as the effects of negative appeals such as anger (Averill, 1982; Frijda, 1986; Lazarus, 1991a; Roseman, Antoniou, & Jose, 1996), fear (Boster & Mongeau, 1984; Brooker, 1981; Mewborn & Rogers, 1979; Witte, 1995), guilt (Boster et al., 1999), and irritation (Aaker & Bruzzone, 1985).

Rational and Emotional Responses

Although the informational content produced rational responses whereas the transformational content evoked emotional responses, the occurrence of the two types of responses was in fact highly intertwined (Puto & Wells, 1984). On the one hand, rational responses to an informational ad, such as message elaboration and belief formation, could be substantially enhanced when appropriate emotional content was added (Deighton, Romer, &

McQueen, 1989; T. Duncan, 2002; Mano, 1997). Even in product categories where there were substantial technological differences that provided a basis for a strong informational claim of product superiority, advertisers still attempted to develop emotional bonds between consumers and an advertised brand (Marshall, 2006).

On the other hand, the occurrence of emotional responses was not necessarily independent of cognition (Lazarus, 1984; Zajonc, 1984b). There were two distinct routes to the production of emotional responses (Andreasen, 1997; Izard, 1993; LeDoux, 1995; Teasdale et al., 1999). One route "involves subcortical structures and generates emotional responses to simple perceptual and associative aspects of stimuli. The second route involves cortical structures and generates emotional responses reflecting the meanings of interpretations given stimuli" (Teasdale et al., 1999, p. 210). In other words, "primitive, genetically prewired circuit entities of the visceral brain … circuits which appear to influence information processing in higher cognitive areas of the cortex" (Panksepp, 1989, p. 8) was not involved in the generation of subcortical emotional responses but cortical emotional responses. Subcortical emotional responses were well recorded in the classical conditioning of fear reactions to audio or visual stimuli (LeDoux, Iwata, Cicchetti, & Reis, 1988; LeDoux, Romanski, & Xagoraris, 1989) and they either interrupted the cognitive focus of current attention or influenced the context for ongoing cognitive processes (Simon, 1982). Cortical emotional responses were well recorded in studies that manipulated semantic or schematic meanings of audio or visual stimuli (Decety & Chaminade, 2003; Mitchell, Elliott, Barry, Cruttenden, & Woodruff, 2003) and the meanings directly mediated the generation of emotion through cognitive processing (Teasdale, 1993; Teasdale & Barnard, 1993; Teasdale et al., 1999). Because ads in general were highly associated with semantic and schematic meanings (Hoyer & MacInnis, 2004), cognitive theories of emotion, such as

attribution theories (Weiner, 1985) and appraisal theories (Lazarus, 1991b), were often used to account for the role of knowledge structures in the processing of emotional responses.

The close interrelationship between cognition and emotion was more evident when the hard facts or benefits of a product might be emotional in nature; for example, romantic feeling was used to promote perfume and the feeling of interest was also an internal attribute of the product (Hoyer & MacInnis, 2004). Strictly speaking, an informational ad had a primary content focus on information/cognition and a secondary content focus on transformation/emotion (Shen, 2007). A transformational ad had a primary content focus on transformation/emotion and a secondary content focus on information/cognition (Shen, 2007). Cognitive and emotional responses to an informational ad or a transformational ad might be equally important (Shen, 2007); but under certain circumstances, emotional response was more important than cognitive response in the formulation of attitude (Morris et al., 2002).

Attitude was defined as a positive or negative evaluation about certain person, object or issue, and was composed of three elements, cognitive, emotional, and conative (Hoyer & MacInnis, 2004). Although an element of attitude, conative attitude was often treated as intention and predicted with the cognitive and emotional elements of attitude (Cacioppo & Petty, 1989; Fishbein & Ajzen, 1975). The relative impact of cognitive and emotional attitude on conative attitude or intention was examined in one recent study on responses to 240 TV, radio and print ads in 13 product categories (Morris et al., 2002). Cognitive attitude was operationalized as cognitive responses including believability and knowledge. Emotional attitude was operationalized as emotional responses including pleasure, arousal, and dominance. Conative attitude was operationalized as brand interest and purchase intention. Path analysis

with structural equation modeling indicated that emotional attitude had a much large direct impact on conative attitude than did cognitive attitude at an aggregate level.

Fellow-up regression analyses by the 13 categories further indicated that emotional attitude outperformed cognitive attitude in accounting for more variance in conative attitude except for computers. Emotional attitude explained 3 to 30 percent of the variance in conative attitude across the 13 categories whereas cognitive attitude accounted for 2 to 13 percent of the variance. Regression analyses by the three media also suggested the superiority of emotional attitude over cognitive attitude in predicting conative attitude except for radio. Emotional attitude explained 15 to 22 percent of the variance in conative attitude across the three media whereas cognitive attitude accounted for 0 to 26 percent of the variance.

Although there was evidence that emotion could be more important than cognition in attitude formation (Morris et al., 2002), attitude models were primarily cognitive. The best example was the elaboration likelihood model (ELM) (Petty & Cacioppo, 1986). According to the ELM, there were two routes to attitude formation: (1) the route taken by individuals who thought actively about information in a message, or the central route and (2) the route taken by individuals who did not think actively about the informational content of a message, or the peripheral route. The central route emphasized cognitive/effortful thinking and minimal emotional involvement in processing messages. Individuals who traveled this route were referred to as cognitive elaborators. The peripheral route was almost the exact opposite of the central route to persuasion. Individuals who traveled this route were referred to as cognitive misers and process messages based on simple affective cues such as source attractiveness and message length. Essentially, because of the cognitive base of the ELM, emotion was treated as a simple peripheral cue that led to less persistent attitude formation and change whereas cognition

was regarded as the main force contributing to a longer-lasting attitude formation and change (Petty & Cacioppo, 1986).

A recent study (Morris, Woo, & Singh, 2005) reexamined the superiority of cognition over emotion in attitude formation as claimed in the ELM. Emotional responses of cognitive elaborators, i.e. people who formed their attitude through the central route, and cognitive misers, i.e., people who formed their attitude through the peripheral route, were compared in terms of pleasure, arousal, and dominance for the same ads. Cognitive elaborators in fact had a higher level of emotional responses, particularly a higher pleasure score, than cognitive misers. Furthermore, cognitive elaborators also indicated a higher level of purchase intention than cognitive misers and there was a particularly significant impact from pleasure to purchase intention.

Measuring Emotion

A major issue in cognition and emotion studies was the difficulty measuring emotional response (Morris, 1995). It was widely accepted that cognitive responses could be measured with recall or recognition of message content and thought-listing surveys about beliefs (Hoyer & MacInnis, 2004). But measuring emotion was extremely controversial owing to a wide range of emotion types and a variety of competing emotion theories (Simon, 1982). However, most measures of emotional responses to advertising could be categorized as one of two types: physiological and self-report (Mackay, 1980).

Physiological measures

Physiological measures stemmed from early emotion theories that posited that emotion was manifestation of involuntary physiological or biochemical responses (e.g., changes in skin conductance, blood pressure, skin temperature and heart rate, facial expressions, respiration and

pupil dilation, and so on) (James, 1884). Two types of physiological responses, arousal and facial expression, were often used as the indicator of emotional experience (Mackay, 1980).

A few physiological techniques were developed to measure arousal. Those techniques included electroencephalographs that track electrical activity in the brain, pupillometrics that investigated the change in the size of an eye's pupil, electrocardiogram that measured heart action, and galvanic skin response that records skin conductance (Davis, 1997). Those techniques might introduce experimental artifacts because the existence of those measurement devices might influence arousal; therefore, they were often used with other types of measurement tools (Davis, 1997). New techniques such as functional Magnetic Resonance Imaging techniques (or fMRI) were increasingly being used to assess physiological responses (Morris et al., 2008). Nevertheless, technical advancement of arousal measurement could not make up for a theoretical drawback in arousal research, i.e., arousal alone did not fully explain emotional experience but just the intensity aspect of it (Clark, 1982).

Facial expression could be identified through electromyographs or subtle changes in the facial musculature (Davis, 1997). But to construct a link between facial expression and specific emotion, a coding system, such as the Facial Action Coding System or FACS (Ekman & Friesen, 1978), was needed. Coding systems classified facial expressions based on a select set of dimensions and associated the pattern of musculature with a specific emotional response (Ekman & Friesen, 1978). Nevertheless, empirical evidence did not support the notion that each specific facial expression corresponded to a unique emotional response because individuals could consciously alter facial expressions owing to social norms and cultural considerations (Izard & Bartlett, 1972; Scherer & Wallbott, 1994)

Self-report measures

Self-report measures stemmed from cognitive theories of emotion with the assumption that subjective experience of emotion could be sufficiently described or labeled with words (Mackay, 1980). The marketing and advertising literature was filled with written self-reports on rating scales. For example, Duncan and Nelson (1985) developed a scale to measure humor in an ad. Edell and Burke (1987) developed a scale to capture warm, upbeat and negative feelings evoked by an ad. Within the self-report tradition, there were two distinctive approaches to emotion (Morris et al., 2008). One was a discrete approach, and the other was a dimensional approach.

Discrete approach to emotion

The discrete approach was in fact a Darwinian approach to emotion, which sought evolutionarily fundamental or discrete emotions to define all subjective emotional experiences (Mandler, 1984; Plutchik, 1980). According to this approach, there was a finite set of discrete or basic emotions – such as joy, anger, sadness, and fear – that were innate to all human beings across various cultures and developmental stages (Izard, 1992; Plutchik, 1982). Next, certain patterns or combinations of those basic emotions resulted in the subjective experience of emotion (Izard, 1992; Plutchik, 1982). Therefore, emotional responses were well measurable through investigating the extent to which each of the basic emotions was experienced (Richins, 1997). One typical way to measure emotional responses with the discrete approach was to give participants bipolar adjective pairs of basic emotions, such as happy versus unhappy (Mackay, 1980). Thorson and her colleagues (1991) employed this bipolar adjective technique when measuring emotional response to political ads.

The basic emotions approach was criticized as merely labeling without a sound theoretical foundation that explained the experience of emotion (Roseman, 1984). There could be a set of eight emotions — interest, surprise, joy, anguish, fear, shame, disgust, and rage (Tomkins, 1980),

or another set of eight emotions — fear, anger, joy, sadness, acceptance, disgust, anticipation, and surprise (Plutchik, 1984), or even another set of ten emotions — interest, joy, surprise, distress, anger, disgust, contempt, shame, fear, and guilt (Izard, 1977). The disagreement on either the number or the kinds of emotions across the three lists seemed to suggest a lack of well-accepted theoretical ground to define the very notion of "discrete" (Mandler, 1984). The status of an emotion as basic often depended on a researcher's own criterion, and some so-called basic emotions were proposed on grounds, such as frequency-related salience in culture and experience, levels in an emotion hierarchy, etc., which were irrelevant to whether they were basic in a psychological sense (Ortony & Turner, 1990).

The reliance of the discrete approach on verbal labels such as adjectives to measure subjective emotional experiences was also problematic. The use of adjectives might lead to a distorted reporting process that was subject to an individual's linguistic habits, vocabulary, memory, and social desirability (Lazarus, 1966), and language was too insensitive a medium for communicating private experiences (Mandler, 1962). Additionally, some cultures might not have adjectives for a specific type of emotion but individuals in those cultures did experience that emotion, which made it impossible for a cross-cultural comparison on that emotion with adjectives (Kitayama & Markus, 1990).

Dimensional approach to emotion

The approach originated from early studies on semantics (Osgood, Suci, & Tannenbaum, 1957). Osgood and his colleagues (1957) conducted a set of factor analyses on adjectives and identified a three-dimensional semantic space composed of evaluation, potency, and activity. A few other researchers (Averill, 1975; Bush, 1973; Schlosberg, 1952) explored the semantic structure of adjectives about emotion and identified pleasantness, activation as well as potency, aggression, or attention-rejection as the dimensions of emotion. Those findings were further

developed into a three-dimensional pleasure-arousal-dominance model of emotion (hereinafter referred to as "PAD") (Russell & Mehrabian, 1977). Pleasure-displeasure referred to positive versus negative affective state in response to a stimulus and corresponded to the pleasantness component of emotion. Arousal-nonarousal referred to physical activity and/or mental alertness and corresponded to the activation component. Dominance-submissiveness referred to feelings of control and influence over others and situations versus feeling controlled and influenced by external circumstances and corresponded to the potency component of emotion (Mehrabian & Russell, 1974).

However, PAD went through some changes after the original formulation. Russell later dropped dominance in his emotion research and used pleasure and arousal to define emotion (Russell, 1980) either because he preferred the simplicity of a two-factor structure (Russell, 1980) or because he failed to replicate the dominance dimension across studies or cultures (Russell, 1978, 1983). Russell (1980) went on proposing a circumplex model, in which emotion descriptors were be systematically arranged around the perimeter of a circle. This affect circumplex contained four bipolar dimensions that were spaced 45 degrees apart, namely high versus low activation, high activation and pleasantness versus low activation and unpleasantness, pleasantness versus unpleasantness, and low activation and pleasantness versus high activation and unpleasantness (Russell, 1980). The circumplex model is presented in Figure 2-1. Pleasantness and activation, which are depicted in the darker lines, are the basic dimensions of Russell's affect circumplex.

Watson and Tellegen (1985) also proposed an affect circumplex. Their circumplex model closely resembled Russell's (1980) model in terms of the structure but differed from it in terms of the basic dimensions. To be more specific, Watson and Tellegen's circumplex also contained

four bipolar dimensions that were spaced 45 degrees apart but they were high positive affect versus low positive affect, strong engagement versus disengagement, high negative affect versus low negative affect, and pleasantness versus unpleasantness. Positive affect and negative affect, rather than pleasantness and activation, were the two basic dimensions of their affect circumplex (Watson & Tellegen, 1985, Figure 1, p. 221).

Because the two circumplex models were both based on factor analysis, the difference in basic dimensions between them might just be a terminological controversy as to how to name the basic dimensions (Larsen & Diener, 1992). Larsen and Diener (1992) argued that the labels "positive affect" and "negative affect" were misleading and should be replaced with "pleasantness" and "activation". Their argument was undoubtedly supported by Russell and his associates (Feldman, Barrett, & Russell, 1998) but was challenged by Watson, Tellegan, and their associates (Watson, Wiese, Vaidya, & Tellegen, 1999). However, a real problem for the models was neither of them fit real-life data in confirmatory factor analysis (Feldman et al., 1998). In three analyses conducted by Russell and his associates (Feldman et al., 1998), the root mean square error of approximation (RMSEA) values were .135, .131, and .106, which indicated a consistently poor fit as RMSEA values of .10 or greater demonstrate a poor fit (Browne & Cudeck, 1993). Similarly, in two analyses conducted by Watson, Tellegan, and their associates (Watson et al., 1999), the RMSEA values were .234 for momentary data and .294 for general data in the first analysis and were .094 for momentary data and .123 for general data in the second analysis, which also indicated a consistently poor fit of their circumplex model.

The consistent poor fit of the circumplex models suggested that something was missing in the models (Feldman et al., 1998). Lazarus (1991b), from a relational perspective, pointed out that circumplex models such as the one proposed by Watson and Tellegen (1985) ignored the

person-environment relationship inherent in emotional responses. Interestingly enough, the dominance dimension dropped by Russell, to some extent, addressed feelings about the person-environment relationship (Mehrabian, 1995). Shaver and his associates (Shaver, Schwartz, Kirson, & O' Connor, 1987) conducted a multidimensional scaling analysis to compare two-dimensional versus three-dimensional emotion models and concluded "[t]he three-dimensional solution helps to differentiate between what the cluster analysis suggests are separate basic-emotion categories, and it is clearly more informative as a representation of emotion knowledge than the two-dimensional solution" (p. 1071).

There were two ways to translate the three-dimension concept into a workable measure, a verbal method (Mehrabian & Russell, 1977) and a non-verbal method (P. Lang, 1980). With the verbal method, participants were given a checklist of up to 16 bipolar adjectives and asked to indicate their feelings about a given stimulus. Next, the scores on each adjective were collapsed into the three dimensions with factor analysis (Mehrabian & Russell, 1977). With the non-verbal method, participants were given self-assessment manikin (hereinafter referred to as "SAM") (P. Lang, 1980) to report their feelings. Unlike its verbal counterpart, SAM was a graphic representation of each PAD dimension with a manikin along a continuous nine-point scale (Morris, 1995). In the first row of the SAM, the manikin's facial expression varied from smiling and happy to frowning and unhappy along the pleasure/displeasure dimension. In the second row, the manikin's facial expression varied from eye-open and eyebrow-elevated to calm and eye-closed along the arousal/non-arousal dimension. In the third row, the manikin's size varied from huge to tiny along the dominance/submissiveness dimension (Morris, 1995).

The non-verbal alternative was found to be a better alternative than the verbal checklist method because it eliminated cognitive processing, and was easier and quicker to use (Morris,

Waine, & Lang, 1993). Meanwhile, it "generated a similar pattern of scale values for these situations as was obtained for the semantic differential" (P. Lang, 1980, p. 123). SAM could even be viewed as a combination of self-report and facial expression because its graphic characters well resembled facial expressions in different scenarios (P. Lang, 1980). All the advantages of SAM made it a culture free measure of emotion (Bradley, Greenwald, & Hamm, 1993).

Measuring emotion with AdSAM®

Based on SAM, AdSAM® emerged as an effective tool for measuring emotional response to marketing communications stimuli, and crossed the boundary between the discrete approach and the dimensional approach (Morris, 1995). The adjectives that were used to construct PAD were added to a list of 'emotion adjectives' found in the literature and measured with the manikin. Then the adjectives were examined for mean error or consistency in response. The result was a list of emotion adjective with PAD scores that could be used to identify variations in feelings, such as lucky, angry, provocative, and indignant, while maintaining the integrity of the three dimensions of PAD (Morris, 1995).

AdSAM® was used to assess responses to television advertising (Morris, Bradley, Waine, & Lang, 1992; Morris, Roberts, & Baker, 1998), pre-production vs. post-production advertising (Morris & Waine, 1993), and global advertising across cultures (Morris, 1995; Morris, Bradley, Sutherland, & Wei, 1993; Morris, Strausbaugh, & Nthangeni, 1996). In the two above-mentioned studies (Morris et al., 2002; Morris et al., 2005), it was used to refine the process of attitude formation and was a valuable tool for strategic planning, message testing and brand tracking. In the current research, AdSAM® is used to measure emotional response to political ads.

Summary of Literature Review

A chain reaction model of advertising effectiveness (Lavidge & Steiner, 1961; Shama, 1976) was identified through the literature review of political marketing. According to that model, voters learned of candidate characteristics and issue stands from political ads, and the knowledge in turn substantially impacted their evaluation of a candidate.

Next, a few empirical studies were reviewed to address the impacts of issue/image and negative/positive political advertising on message learning/memory (Geer & Geer, 2003; Kaid et al., 1992; A. Lang, 1991; Newhagen & Reeves, 1991; Schleuder, 1990; Shapiro & Rieger, 1992) and candidate evaluation (Kahn & Geer, 1994; Thorson et al., 1991). Although those studies provided contradictory outcomes owing to different operationalization of memory and candidate evaluation, different types of ads, and certain methodological problems, two sets of findings were identified as particularly relevant to the chain reaction model (Lavidge & Steiner, 1961; Shama, 1976) adopted by the current study. One was about message learning/memory of candidate characteristics and issue stands, and the finding was that issue ads outperformed image ads in generating higher number of recalled issues and personal characteristics (Kaid et al., 1992). With that finding, cued recall of issues and personal characteristics (Kaid et al., 1992) is used as the measure of memory in this study. The other was about candidate electability, and the findings were positive ads outperformed negatives ads in generating more positive candidate electability and negative issue ads outperformed negative image ads in generating more positive candidate electability (Kahn & Geer, 1994).

Based on the chain reaction model of advertising effects (Lavidge & Steiner, 1961; Shama, 1976), memory and candidate electability were not two separate effects. Memory of an ad might influence the evaluation of the candidate advertised in the ad, but such an influence was not

tested in previous research. This missing link is explored in the current study with a path analysis.

Furthermore, conceptual similarity between image/issue political ads and informational/transformational advertising was identified in the literature review. An image ad had a primary focus on transformation and a secondary focus on information, whereas an issue ad had a primary focus on information and a secondary focus on transformation (Shen, 2007). The Puto and Wells (1984) informational/transformational survey scale is used to calibrate the perception of informational and transformational content of issue and image ads and to better understand the impact of perception on advertising effectiveness.

The informational aspect of adverting was associated with rational/cognitive response to advertising whereas the transformational aspect was associated with experiential/emotional response to advertising (Puto & Wells, 1984). There was evidence that emotional response was more important than cognitive response in shaping consumer attitude and purchase intent (Morris et al., 2002). There was some attempt to investigate emotional response to political advertising with a discrete approach to emotion and verbal measures (Thorson et al., 1991); but there were quite a few theoretical problems with both the discrete approach and verbal measures (Kitayama & Markus, 1990; Lazarus, 1966; Mandler, 1962, 1984; Ortony & Turner, 1990). Dimensional approach (Averill, 1975; Bush, 1973; Osgood et al., 1957; Russell & Mehrabian, 1977; Schlosberg, 1952) and non-verbal measures (P. Lang, 1980; Morris, 1995) were a more promising alternative to assess emotional response (Morris et al., 2008). Specifically, AdSAM® (Morris et al., 2002; Morris et al., 2005) is used as the measure of emotional response to advertising or the emotional attitude toward candidate. AdSAM® was a graphic representation of three emotional dimensions, namely, pleasure, arousal, and dominance, identified in previous

research (Morris 1995; Russell & Mehrabian, 1977). It was used in a number of studies on advertising effectiveness (Morris, 1995; Morris et al., 1993; Morris et al., 1992; Morris et al., 1998; Morris et al., 1996; Morris & Waine, 1993; Morris et al., 2002; Morris et al., 2005).

The literature review leads to the formulation of research questions. Fundamentally, this study attempts to find out 1) how the perception of issue/image content of political ads, measured with the informational/transformational advertising scale, will influence memory of candidate issue stands and personal characteristics, 2) whether the relationship between the perception of issue/image content and memory of candidate issue stands and personal characteristics will vary across negative and positive ads, 3) how the perception of issue/image content will influence the impact of cognitive response, measured by memory, and of emotional response, measured by AdSAM® on voters' opinion on a candidate's electability, and 4) whether the relationship between the perception of issue/image content and candidate electability will vary across negative and positive ads.

Hypotheses and Research Questions

The hypotheses and research questions focus on three aspects. The first aspect is about perception of advertising content. The second aspect is about memory. The third and last aspect is about candidate electability.

Perception of Advertising Content

According to the literature review of informational and transformational advertising, the concept of information and transformation was well applicable to issue and image (Shen & Kim, 2006). The scale of informational/transformational advertising (Puto & Wells, 1984) was used to calibrate the informational and transformational content of issue and image ads; and an image ad had a primary focus on transformation and a secondary focus on information, whereas an

issue ad had a primary focus on information and a secondary focus on transformation (Shen, 2007). It is therefore proposed:

- Hypothesis 1: Based on previous research about the relationship between issue/image ads and informational/transformational advertising, the informational score of issue ads will be higher than the transformational score of issues ads at .05 significance level as measured with the informational/transformational advertising scale. Conversely, the transformational score of image ads will be higher than the informational score of image ads at .05 significance level as measured with the informational/transformational advertising scale.

Memory

The key question about memory is whether the characteristics of political ads, issue/image and negative/positive, influence the memory of ad content. Memory was previously measured with free recall and recognition test of verbal, visual, and audio cues in ads (A. Lang, 1991; Newhagen & Reeves, 1991; Schleuder, 1990) or cued recall of issue stands and candidate characteristics (Kaid et al., 1992). Cued recall of issue stands and candidate characteristics is the measure of memory in this study because memory of candidate issue stands and personal characteristics were a major component of the chain reaction model of advertising effectiveness (Lavidge & Steiner, 1961; Shama, 1976) adopted in the current study. There was strong evidence that issue ads outperformed image ads in generating higher number of recalled issues and personal characteristics (Kaid et al., 1992). Therefore, it is proposed:

- Hypothesis 2: Based on previous research about memory of issue and image ads, issue ads will be better remembered than image ads at .05 significance level as measured with cued recall of candidate issue stands and personal characteristics.

In previous studies on memory of negative and positive ads, negative ads were found to be better remembered than positive ads (A. Lang, 1991; Newhagen & Reeves, 1991), but the results were based on recall and recognition test of verbal, visual, and audio cues in ads rather than cues about issue stands and personal characteristics. It remained unclear whether the valence of political ads, negative or positive, would influence the recall of candidate issue stands and

personal characteristics. It also remained unclear whether there would be an interaction effect of issue/image by negative/positive on the recall of candidate issue stands and personal characteristics. Therefore, it is proposed:

- Research question 1: How will the valence of political ads, positive or negative, influence memory of ad content as measured with cued recall of candidate issue stands and personal characteristics?

- Research question 2: How will the valence of political ads, positive or negative, interact with and the emphasis of political ads, issue or image, on memory of ad content as measured with cued recall of candidate issue stands and personal characteristics?

Candidate Electability

Previous research did not provide consistent evidence as to how issue and image ads differed from each other in influencing voters' opinion on a candidate or the candidate electability (Kahn & Geer, 1994; Thorson et al., 1991). Therefore, it is proposed:

- Research question 3: How will the emphasis of political ads, issue or image, influence candidate electability?

Nevertheless, there was evidence that positive ads outperformed negatives ads in generating more positive candidate electability, and negative issue ads outperformed negative image ads in generating more positive candidate electability (Kahn & Geer, 1994). In the current study, it is proposed:

- Hypothesis 3: Based on previous research about candidate electability, positive ads will produce more positive electability toward candidate than negative ads at .05 significance level.

- Hypothesis 4: Based on previous research about candidate electability, negative issue ads will produce more positive cognitive electability toward candidate than negative image ads at .05 significance level.

In this study, candidate electability is composed of issue competency (Kahn & Geer, 1994), candidate personality (Kahn & Geer, 1994; Thorson et al., 1991), and voting intention (Kahn & Geer, 1994). Furthermore, based on cognitive theories of persuasion (Cacioppo &

Petty, 1989; Fishbein & Ajzen, 1975), the cognitive antecedent to electability is measured with message recall. The emotional antecedent to electability is measured with AdSAM®(Morris et al., 2002; Morris et al., 2005). There was evidence that emotional response had a larger impact than cognitive response on the attitudinal construct of electability (Morris et al., 2002). It is therefore proposed:

- Hypothesis 5: Based on previous research about attitude, emotional response, measured with AdSAM®, will have a larger impact on electability than cognitive response, measured with recall, at .05 significance level.

There was some attempt to investigate emotional response to political advertising with a discrete approach to emotion and verbal measures (Thorson et al., 1991); but such an attempt was problematic and should be replaced by a dimensional approach and non-verbal measures such as AdSAM® (Morris et al., 2008). The relationship between ad content, i.e., issue/image and negative/positive, and emotional response, measured with AdSAM®, has never been addressed in previous research. The informational/transformational scale is used to measure voters' perception of issue and image, and the perception provides an alternative way to explore the impact of ad content on attitude toward candidate. Path analysis is used to investigate the relationships of interest, and two more research questions are proposed:

- Research question 4: How will the perception of issue and image content, measured with the informational/transformational advertising scale, influence cognitive and emotional responses; and next how cognitive and emotional responses influence candidate electability?

- Research question 5: How will the relationship measured in Research Question 4 vary across negative and positive ads?

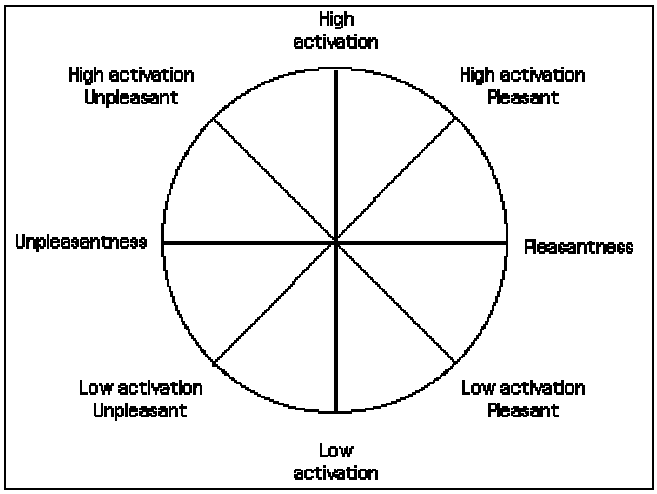

Figure 2-1. Russell's affect circumplex (Russell, 1980, Figure 1, p. 1164)

CHAPTER 3
MATERIALS AND METHODS

This study adopted a 2 (positive vs. negative) by 2 (issue vs. image) between-subjects design. There are four experimental conditions, i.e., positive image, positive issue, negative image, and negative issue. Table 3-1 presents more details about the conditions.

Materials and Measures

TV ads are chosen for the current study because 1) TV advertisements are particularly capable of functioning as a transformational medium (Puto & Wells, 1984) and 2) TV advertisements dominate political broadcasting in the U.S. (Kaid & Johnston, 2001). A content analysis is used to select the right TV political ads from a pool of congressional and senatorial campaign advertisements for the 2004 and 2006 elections for the current study. The coding scheme for the political ads was modified from Laskey's typology (Laskey, Day, & Crask, 1989) and used in a previous content analysis of political TV ads (Shen & Kim, 2006). All the variables described below are included in Appendix A.

Independent Variables

Perception of ad content

The Scale (Puto & Wells, 1984, p. 641) was used to measure both the perception of informational cues (hereinafter referred to as "PIFC") and the perception of transformational cues (hereinafter referred to as "PTFC") in a political ad. The Scale has 23 items. Eight of them measure PIFC and the other 15 items measure PTFC. The Scale is modified for political ads. "Brand" is replaced with "candidate" and "company" with "party." A mid-point category "neither agree nor disagree" is added to the Scale to form a 7-point scale, ranging from "strongly disagree" to "strongly agree." Additionally, the negative ads include both the candidate and the opponent, therefore two informational items and one transformational item are asked twice to

address issue and personality learning about both candidates. As a result, there are ten informational and 16 transformational items for the negative ads. More details about the items for negative ads are available in Appendix A. PIFC and PTFC also serve as manipulation checks of issue and image content. They are also exogenous variables in path analysis.

Prior exposure to ad and familiarity with candidate

Survey participants are asked to report their prior exposure to each ad on a three-point scale (1: never, 2: a few times, 3: many times), and familiarity with the brand/candidate on a five-point scale ranging from 1 (very unfamiliar) to 5 (very familiar). Prior exposure is used to filter out participants who may have watched the ads because previous exposure to ads is likely to bias processing of message content. Low familiarity is a reality for most candidates (Thorson et al., 1991), and this phenomenon can be checked with the familiarity measure.

Dependent Variables

Message recall

Cued recall is used to measure memory with a two-item instrument employed in previous research (Kaid et al., 1992). Participants are asked to 1) describe candidate characteristics in adjective forms, and 2) state political issues associated with each candidate. One adjective is counted as one recalled message unit of candidate characteristics. One political issue is counted as one recalled message unit of political issues.

Emotional response

AdSAM® is used to measure emotional candidate attitude. Participants will be asked to indicate their feeling of pleasure, arousal, and dominance on the three dimensions of the scale. The scale has been used in previous studies on attitude (Morris et al., 2002; Morris et al., 2005).

Candidate electability

Three verbal scale of candidate evaluation employed in previous research (Kahn & Geer, 1994) are used to measure candidate electability. The first scale is used to assess candidate competence in the issues mentioned in the ads and is composed of one seven-point item ranging from 1 (very incompetent) to 7 (very competent). The second scale is used to assess candidate characteristics in terms of trustworthy, strong leadership, hardworking, and knowledgeable and is measured with a 7-point Likert-type scale ranging from 1 (strongly disagree) to 7 (strongly agree). The third scale is voting intention and participants will be asked to indicate how likely they would vote for the candidate on a 5-point scale ranging from 1 (very unlikely) to 5 (very likely). Based on the tripartite model of attitude (McGuire, 1989), those three variables will be used to create a composite measure of candidate electability.

Graded Response Model (GRM) of Item Response Theory (IRT)

A Likert-type scale, i.e., "strongly disagree – strongly agree," is used in the current study to measure learning of informational and transformational cues from the ads. Traditionally, this type of scales is assumed to have equal distance between two consecutive scale categories and generate interval type data (Davis, 1997); therefore, "computation of means, correlations, and other inferential statistics (e.g., reliability coefficients) is justified" (Singh, 2004, p. 188). However, the interval data assumption of those scales is rarely tested in practice (Singh, 2004), and responses to scale categories such as "strongly disagree – strongly agree" or to "variations of this general theme can be assumed to involve categorical, rank-ordered data" (p. 188).

IRT is developed to better account for responses to Likert-type scales. With IRT, the responses to the scales are assumed to be categorical, rank-ordered observable data, and serve as the indicator of interval-type latent data; furthermore, a probability model connects the observable data to the latent data (Ewing, Salzberger, & Sinkovics, 2005; Singh, 2004; Singh et

al., 1990). For example, each item of the informational/transformational advertising scale has seven categories, ranging from "strongly disagree" to "strongly agree." A participant's response to Item 1 is assumed to be an observable choice out of the seven available categories for Item 1, and this observable response is also assumed to be the indicator of the participant's latent response to Item 1. The observable response is converted to the latent response through a probability model that takes into account both participant and scale item characteristics (Embretson & Reise, 2000).

One of the most commonly used IRT model is a two-parameter logistic model (2PL model) that has an item discrimination parameter ("α" parameter) and an item difficulty parameter ("β" parameter) associated with a latent trait ("θ") (Hambleton & Swaminathan, 1985; Oishi, 2006).

For the *s*th participant responding to the *i*th item, the model can be expressed as

$$P(X_{is} = 1 | \theta_s, \beta_i, \alpha_i) = \frac{\exp[\alpha_i(\theta_s - \beta_i)]}{1 + \exp[\alpha_i(\theta_s - \beta_i)]}$$

where X_{is} is a dichotomous response variable to the *i*th item with "1" denoting correct response, θ_s is the *s*th participant's score on the latent trait scale, α_i is the *i*th item's discrimination parameter, β_i is the *i*th item's difficulty parameter, and exp is the natural log base (2.718). The discrimination parameter indicates how well the *i*th item distinguishes between participants with low versus high standing on the latent trait scale (Oishi, 2006). The difficulty parameter indicates the score on the latent trait scale when the probability of responding to the *i*th item correctly is 50%; in other words, if an participant with a latent score of –1 (1 standard deviation below the latent trait scale's mean, which is standardized to be "0") has a 50% probability to answer correctly to the ith item, then the difficulty parameter of the ith item is –1 (Oishi, 2006).

The obvious problem for the 2PL model to be used for survey responses is there is no right or wrong answer to a survey item. Additionally, survey items are often multiply ordered rather than following a dichotomous pattern. To address those concerns, the GRM was developed by converting the multiply ordered item categories into a set of binary response variables to fit the IRT framework (Samejima, 1969). When a K category scale is used for the ith survey item, the categories are scored $x_i = 0, 1, \ldots, m_i$, respectively, and $m_i = K_i - 1$. For example, a 3-point/category survey item is scored $x_i = 0, 1, 2$. The participants' responses to the ith item are converted in a binary manner so that those less than the x_i category are recoded into "0" and those equal to or greater than the x_i category are recoded into "1." As a result, a response of "1" on the original 0 to 2 scale is recoded as "1" for both the "0" and "1" categories but "0" for the "2" category.

$P^*_{ixs}(\theta_s)$ is the probability for the sth participant to have the "1" response to the x_i category of the ith item conditional on the sth participant's score on the latent trait scale (θ). Through the binary coding of responses in the scale categories, the 2PL model can used to specify the GRM and is expressed as

$$P^*_{ixs}(\theta_s) = \frac{\exp[\alpha_i(\theta_s - \beta_{ij})]}{1 + \exp[\alpha_i(\theta_s - \beta_{ij})]}$$

$$x = j = 1, \ldots, mi$$

Note that "1" response to the x_i category for $P^*_{ixs}(\theta_s)$ refers to responding in or above the x_i category rather than responding in the x_i category. For example, when $x = 1$, $P^*_{i1s}(\theta_s)$ refers to the probability of responding in or above scale point 1 or in fact any categories above scale point 0. Similarly, when $x = j = 2$, $P^*_{i2s}(\theta_s)$ refers to the probability of responding in or above scale point 2 or in any categories above scale point 1. Therefore, the difference between $P^*_{i1s}(\theta_s)$ and

$P^*_{i2s}(\theta_s)$, which can be computed by subtracting $P^*_{i2s}(\theta_s)$ from $P^*_{i1s}(\theta_s)$, is the probability of responding in scale point 1. Also note that in (2) x starts from 1 rather than 0 because, by definition, the probability of having the "1" response to the lowest scale point/category $x_i = 0$ or responding in or above scale point 0 is known as

$$P^*_{i0s}(\theta_s) = 1.0$$

and the probability of responding in scale point 0 can be computed by subtracting $P^*_{i1s}(\theta_s)$ from 1. Furthermore, the probability of having the "1" response above the highest scale point/category $x_i = m_i$ or responding in or above scale point $m_i + 1$ is known as

$$P^*_{i(m_i+1)s}(\theta_s) = 0.0$$

simply because the $m_i + 1$ scale point does not exist. As a result, the probability of responding in the highest scale point m_i is the same as the probability of responding in or above m_i or $P^*_{i(m_i)s}(\theta_s) - 0$.

Once the probability of the sth participant's response (x) in or above a scale point/category is known, the probability of the sth participant's response (x) to each scale point/category can be expressed as

$$P_{i0s}(\theta_s) = 1.0 - P^*_{i1s}(\theta_s)$$

$$P_{ixs}(\theta_s) = P^*_{ixs}(\theta_s) - P^*_{i(x+1)s}(\theta_s) = \frac{\exp[\alpha_i(\theta_s - \beta_{ij})]}{1 + \exp[\alpha_i(\theta_s - \beta_{ij})]} - \frac{\exp[\alpha_i(\theta_s - \beta_{i(j+1)})]}{1 + \exp[\alpha_i(\theta_s - \beta_{i(j+1)})]}$$

$$P_{im_i0s}(\theta_s) = P^*_{im_is}(\theta_s) - 0$$

$$x = j = 1, \ldots, mi$$

θ_s is still the sth participant's the latent trait score; α_i is the ith item's discrimination parameter and it is constrained to be equal across all the response categories of the ith item.

However, β_{ij} has a very different meaning. For the K category scale scored from 0 to m_i ($m_i = K_i - 1$), there are m_i intervals between each two neighboring categories. In the IRT literature, the intervals are called thresholds. β_{ij} ($j = 1 \ldots m_i$) is called "threshold" parameter and refers to the trait score necessary to respond above the jth threshold of the ith item with .50 probability.

With the above-mentioned 3-point item on the 0 to 2 scale, the probability of responding in each of the three scale points can be expressed as

$$P_{i0s}(\theta_s) = 1.0 - P^*_{i1s}(\theta_s) = 1.0 - \frac{\exp[\alpha_i(\theta_s - \beta_{i1})]}{1 + \exp[\alpha_i(\theta_s - \beta_{i1})]}$$

$$P_{i1s}(\theta_s) = P^*_{i1s}(\theta_s) - P^*_{21s}(\theta_s) = \frac{\exp[\alpha_i(\theta_s - \beta_{i1})]}{1 + \exp[\alpha_i(\theta_s - \beta_{i1})]} - \frac{\exp[\alpha_i(\theta_s - \beta_{i2})]}{1 + \exp[\alpha_i(\theta_s - \beta_{i2})]}$$

$$P_{i2s}(\theta_s) = P^*_{i2s}(\theta_s) - 0 = \frac{\exp[\alpha_i(\theta_s - \beta_{i2})]}{1 + \exp[\alpha_i(\theta_s - \beta_{i2})]} - 0$$

and there are two threshold parameters, β_{i1} and β_{i2}, estimated for threshold 1 between scale points 0 and 1 and threshold 2 between scales points 1 and 2, respectively. If β_{i1} is –1 and β_{i2} is 1, then respondents whose latent trait score is below –1 are more likely to respond in scale point 0, those whose score is –1 are equally likely to respond in scale points 0 and 1 or threshold 1, those whose score is between –1 and 1 are more likely to respond in scale point 1, those whose score is 1 are equally likely to respond in scale points 1 and 2 or threshold 2, and those whose score is above 1 are more likely to respond in scale point 2.

Essentially, the observed responses are viewed as probabilities of agreeing with an item (Hambleton & Swaminathan, 1985; Linden & Hambleton, 1996; Oishi, 2006). Such a probabilistic approach is in line with the cognitive process that "an individual's response [to questionnaire items] is not based solely on his/her 'true' standing on the latent variable but is also affected by other cognitive processes … includ[ing] distracting information and events,

mood swings and processes, social desirability and other biases, and random memory processes" (Singh, 2004, p. 196). Because of this measurement advantage, IRT is used in this study to estimate latent responses to the Scale. Next, the latent responses are used to test the hypotheses and research questions about learning of informational and transformational cues in this study.

Table 3-1. Experimental conditions

Condition	Ad
1	Positive Image
2	Positive Issue
3	Negative Image
4	Negative Issue

CHAPTER 4
RESULTS

Pretest

A pretest was conducted to select one typical positive image advertisement, one typical positive issue advertisement, one typical negative image advertisement, and one typical negative issue advertisement. The items in the pretest are included in Appendix A. Forty-four undergraduate students in an advertising strategy class were asked to indicate how much political issue and personal qualities information they learned from five pre-selected advertisements on a seven-point scale ranging from "Very Little" to "A Great Deal." Table 4-1 provided the scores of political issue and personal qualities information.

Based on the results, the typical positive image advertisement was an advertisement of U.S. Congressman Mike Pence of Indiana focusing on the candidate's personal charisma. For the main study, this positive image advertisement was edited to create a Chris Chocola (hereinafter referred to as "the Candidate") positive image advertisement. Specifically, the visuals in the Mike Pence advertisement were replaced with those of the Candidate, but most of the audio about candidate personality was retained. The typical positive issue advertisement was an advertisement of the Candidate focusing on his views on small business. The typical negative image advertisement was an advertisement of the Candidate attacking his opponent Joe Donnelly (hereinafter referred to as "the Opponent") on his poor tax paying record and character. The typical negative issue advertisement was an advertisement of the Candidate attacking the Opponent on tax policies.

Main Study: Model Estimation and Results

A structural equation modeling (SEM) procedure, Lisrel (Joeskog & Sobom, 2005), was used to test the proposed model. Several assumptions of SEM, i.e., independence, normality,

linearity (Hair, Anderson, Tatham, & Black, 1995), as well as equality of variance-covariance matrices across the four experimental conditions, were checked. Except for those variables noted below, there was no significant violation of the assumptions. Specifically, bivariate scatterplots of the dependent variables by their studentized residuals were used to check the independence assumption, and there were no systematic patterns that would indicate the violation of that assumption. The dependent variables' normal probability plots and their skewness and kurtosis scores were used to check the normality assumption, and there was no significant deviation from normality. Barlett's test of sphericity was used to check the linearity assumption, and there was no significant deviation from linearity. Both univariate tests, i.e., Cochran's C, Bartett-Box, and Levene test, and a multivariate test, i.e., Box's M, were used to check the equal variance-covariance assumption, and there was no significant deviation from the assumption.

Descriptive Statistics of Independent Variables

Prior exposure to ad and familiarity with candidate

A total of 1087 participants were recruited. Eight-seven participants had watched at least one of the four advertisements before, and their responses were excluded from the study. The 1000 participants retained in the study were very unfamiliar with both candidates. Table 4-2 provided means and standard deviations of familiarity with the Candidate and the Opponent.

Perception of ad content

The original informational/transformational scale (Puto & Wells, 1984) has eight informational items and 15 transformational items. The same items were used to measure positive issue and image ads in a previous study (Shen, 2007). However, because the negative ads included both the Candidate and the Opponent, two informational items and one transformational item were asked twice to address issue and personality learning about both

candidates. As a result, there were ten informational and 16 transformational items for the negative ads. More details about the items for negative ads are available in Appendix A.

Originally there were nine categories on the scale, but there were missing responses to the low and high ends ("1" and "9") on the scale. Reducing the number of categories is often used to solve this problem (Ewing, Salzberger, & Sinkovics, 2005; Singh, 2004). In this study, the nine-point scale was recoded into a seven-point scale.

For the two positive advertisements, the perception of informational cues (PIFC) was the average of the eight informational items, and the perception of transformational cues (PTFC) was the average of the 15 transformational items. For the two negative advertisements, PIFC was the average of the ten informational items, and the PTFC was the average of the 16 transformational items. Table 4-3 reported the scores of the four advertisements. The PIFC scores of the two image advertisements were significantly lower than the PTFC scores. Conversely, the PIFC scores of the two issue advertisements were significantly higher than the PTFC scores.

The results not only confirmed the validity of the coding scheme to identify informational and transformational advertisements and proved the experimental manipulation successful, but also supported Hypothesis 1. Although the statistical significance might be inflated because of the large sample size, the PIFC scores were above the scale mid-point (4 on a 7-point scale) for the issue advertisements and below the mid-point for the image advertisements. The PTFC scores were above the mid-point for the image advertisements and below the mid-point for the issue advertisements.

One caveat of the results is noteworthy. Although PIFC and PTFC can be measured separately, they are not mutually exclusive (Puto & Wells, 1984). Voters can learn transformational cues from an issue political advertisement (Johnston & Kaid, 2002), for

example, a down-to-earth personality of the Candidate owing to his views on small businesses. Voters can also learn informational cues from an image political advertisement (Christ et al., 1994; Johnston & Kaid, 2002), for example, the Candidate representing Indiana in the U.S. Congress. An informational advertisement in fact has a primary focus on information and a secondary focus on transformation, and a transformational advertisement has a primary focus on transformation and a secondary focus on information (Puto & Wells, 1984).

Table 4-4 reported the reliability coefficients in the four advertisement conditions. The informational coefficients were a little bit higher than those reported in the validation study (Puto & Wells, 1984) whereas the transformational coefficients were quite close to those reported in that study. The informational coefficients were smaller than the transformational coefficients. But the smaller coefficients do not necessarily mean that the informational items are less reliable than the transformational items but indicate that Cronbach's reliability test favors larger numbers of scale items (Hair et al., 1995).

Descriptive Statistics of Dependent Variables

Message recall

Participants were asked to 1) describe candidate characteristics in adjective forms, and 2) state political issues associated with each candidate. Each characteristic adjective or issue was counted as one unit of image or issue recall. Table 4-5 provided means and standard deviations of image recall, issue recall, and total recall of both image and issue. Because the negative advertisements had two candidates whereas the positive advertisements had one candidate only, the image and issue recall in the two negative advertisement conditions were in fact the mean of the recall of the two candidates whereas the two types of recall in the two positive advertisement condition were the exact number of recall of the featured candidate. Also as an effort to make

total recall more comparable across the conditions, the total recall was mean of both image and issue recall.

MANOVA was used to investigate message recall between advertisement valence (positive vs. negative) and advertisement emphasis (image vs. issue). Both advertisement valence and emphasis had a significant direct effect on image recall $F_{Valence}(1, 996) = 173.35$, $p < .05$, partial eta squared = .15; $F_{Emphasis}(1, 996) = 12.48$, $p < .05$, partial eta squared = .01; issue recall $F_{Valence}(1, 996) = 135.21$, $p < .05$, partial eta squared = .12; $F_{Emphasis}(1, 996) = 253.72$, $p < .05$, partial eta squared = .20; and total recall $F_{Valence}(1, 996) = 254.65$, $p < .05$, partial eta squared = .20; $F_{Emphasis}(1, 996) = 29.76$, $p < .05$, partial eta squared = .03. There was also a significant valence by type interaction effect on image recall $F(1, 996) = 8.77$, $p < .05$, partial eta squared = .01; issue recall $F(1, 996) = 288.67$, $p < .05$, partial eta squared = .23; and total recall $F(1, 996) = 119.62$, $p < .05$, partial eta squared = .11.

Based on the results, the issue advertisements generated more issue recall and total recall than the image advertisement; therefore, Hypothesis 2 was supported. Additionally, the negative advertisements generated more image, issue, and total recall than the positive advertisement; therefore, the answer to Research Question 1 was that negative advertisements were better remembered than positive advertisement. Meanwhile, the valence interacted with the emphasis on recall; therefore, the answer to Research Question 2 was that the interaction effect did exist.

Candidate electability

Participants were asked to indicate their opinion on three verbal scale of candidate electability employed in previous research (Kahn & Geer, 1994). The first scale was used to assess candidate competence in tax, the issue mentioned in the ads, on a seven-point item ranging from 1 (very incompetent) to 7 (very competent). Table 4-6 provided comparisons of the two candidates in the two negative advertisement conditions. The Candidate was

significantly more competent than the Opponent in the negative image condition, whereas there was no difference in the negative issue condition. ANOVA was used to investigate the Candidate's tax competency between advertisement valence (positive vs. negative) and advertisement emphasis (image vs. issue). The results indicated that valence did not have a significant direct impact on issue competency $F_{Valence}(1, 996) = .06$, $p > .05$, partial eta squared = .00; but emphasis had a significant direct impact on issue competency $F_{Emphasis}(1, 996) = 33.82$, $p < .05$, partial eta squared = .03. Additionally, valence and emphasis had a significant interaction effect on issue competency $F(1, 996) = 111.85$, $p < .05$, partial eta squared = .10. So the Candidate was perceived as more competent in issue advertisements than in image advertisements, and he was perceived as the most competent in the positive issue condition but the least competent in the positive image condition. Furthermore, *t*-tests about issue competency of the same candidate between the two negative ad conditions indicated that the Candidate was perceived as more competent in the negative image condition than the negative issue condition $t(498) = 3.09$, $p < .05$, whereas the Opponent was perceived as more competent in the negative issue condition than the negative image condition $t(498) = 8.15$, $p < .05$.

The second scale was used to assess candidate characteristics in terms of trustworthy, strong leadership, hardworking, and knowledgeable and is measured with a 7-point Likert-type scale ranging from 1 (strongly disagree) to 7 (strongly agree). Table 4-7 provided comparisons of the two candidates in the two negative advertisement conditions. The Candidate was preferred over the Opponent in the negative image condition, but the Opponent was preferred over the Candidate in the negative issue condition. ANOVA was used to investigate the Candidate's characteristics between advertisement valence (positive vs. negative) and advertisement emphasis (image vs. issue). The results indicated that emphasis did not have a

significant direct impact on candidate characteristics $F_{Emphasis}(1, 996) = 2.48$, $p > .05$, partial eta squared = .00; but valence had a significant direct impact on candidate characteristics $F_{Valence}(1, 996) = 226.96$, $p < .05$, partial eta squared = .19. Additionally, valence and emphasis had a significant interaction effect on issue competency $F(1, 996) = 82.43$, $p < .05$, partial eta squared = .08. So the Candidate was more likable in the positive advertisement conditions than the negative advertisement conditions, and he was the most likable in the positive issue condition but the least likable in the negative issue condition. Furthermore, *t*-tests about candidate characteristics of the same candidate between the two negative ad conditions indicated that the Candidate was more likable in the negative image condition than the negative issue condition $t(498) = 4.99$, $p < .05$, whereas the Opponent was more likable in the negative issue condition than the negative image condition $t(498) = 4.10$, $p < .05$. Table 4-8 reported the reliability coefficients of the candidate characteristics scale in the four advertisement conditions. Table 4-8 reported the reliability coefficients in the four advertisement conditions.

The third scale was used to assess voting intention on a one-item five-point scale ranging from 1 (very unlikely) to 5 (very likely). Table 4-9 provided descriptive statistics and comparisons of voting intention. The voting intention in all conditions was below the scale mid-point, which indicated a low intention to vote for either candidate. The two candidates did not differ from each other in voting intention in the two negative conditions. ANOVA was used to investigate voting intention for the Candidate between advertisement valence (positive vs. negative) and advertisement emphasis (image vs. issue). The results indicated that emphasis did not have a significant direct impact on voting intention $F_{Emphasis}(1, 996) = 1.17$, $p > .05$, partial eta squared = .00; but valence had a significant direct impact on voting intention $F_{Valence}(1, 996) = 15.10$, $p < .05$, partial eta squared = .02. Additionally, valence and emphasis had a significant

interaction effect on voting intention $F(1, 996) = 78.39$, $p < .05$, partial eta squared = .07. Furthermore, *t*-tests about voting intention between the two negative ad conditions indicated that voting intention for the Candidate was higher in the negative image condition than in the negative issue condition $t(498) = 5.08$, $p < .05$, whereas that for the Opponent indicated no difference between the negative issue and negative image conditions $t(498) = .48$, $p > .05$.

The answer to Research Question 3 varied across the three scales. When electability was measured in terms of issue competence, issue ads generated more favorable candidate attitude than image ads. When electability was measured in terms of candidate characteristics and voting intention, there was no difference between issue and image ads. By contrast, Hypothesis 3 was not supported when electability was measured in terms of issue competence, but was supported when the same variable was measured in terms of candidate characteristics and voting intention. Finally, the *t*-tests on the Candidate did not support Hypothesis 4, but those on the Opponent supported Hypothesis 5 in terms of issue competence and candidate characteristics.

Pleasure-arousal-dominance

Participants were asked to indicate their emotional response to the candidate(s) on the nine-point AdSAM® scale in term of pleasure, arousal and dominance. Table 4-10 provided descriptive statistics and comparisons of the pleasure dimension. The pleasure scores were above the scale mid-point in the two positive conditions, and below the scale mid-point in the two negative conditions. The Candidate received higher pleasure score than the Opponent in the two negative conditions. ANOVA was used to investigate pleasure response to the Candidate between advertisement valence (positive vs. negative) and advertisement emphasis (image vs. issue). Both advertisement valence and emphasis had a significant direct effect on pleasure $F_{Valence}(1, 996) = 172.84$, $p < .05$, partial eta squared = .15; $F_{Emphasis}(1, 996) = 6.30$, $p < .05$, partial eta squared = .01. There was also a significant valence by emphasis interaction effect on

pleasure $F(1, 996) = 11.75$, $p < .05$, partial eta squared = .01. The positive issue ad generated the highest pleasure response, whereas the negative issue ad generated the lowest pleasure response. Furthermore, there was no difference between the pleasure response to either the Candidate or the Opponent in the two negative conditions with *t*-tests, $t(498)_{\text{Candidate}} = .61$, $p > .05$; $t(498)_{\text{Opponent}} = -.84$, $p > .05$.

Table 4-11 provided descriptive statistics and comparisons of the arousal dimension. All the arousal scores were below the scale mid-point. The Candidate received lower arousal score than the Opponent in the negative image condition, but there was no difference between the two candidates in the negative issue condition. ANOVA was used to investigate arousal response to the Candidate between advertisement valence (positive vs. negative) and advertisement emphasis (image vs. issue). Advertisement valence had no significant effect on arousal $F_{Valence}(1, 996) = .04$, $p > .05$, partial eta squared = .00; but emphasis had a significant effect on arousal $F_{Emphasis}(1, 996) = 17.54$, $p < .05$, partial eta squared = .02. There was also a significant valence by emphasis interaction effect on arousal $F(1, 996) = 45.04$, $p < .05$, partial eta squared = .04. The positive issue ad generated the highest arousal response, whereas the positive image ad generated the lowest arousal response. Furthermore, *t*-tests about arousal response to the same candidate between the two negative ad conditions indicated that there was no difference for the Candidate in the two conditions $t(498) = 1.70$, $p > .05$, but there was stronger arousal response to the Opponent in the negative image condition than the negative issue condition $t(498) = 3.31$, $p < .05$.

Table 4-12 provided descriptive statistics and comparisons of the dominance dimension. The dominance scores were above or close to the scale mid-point. There was no difference between the two candidates in the two negative conditions. ANOVA was used to investigate

dominance response to the Candidate between advertisement valence (positive vs. negative) and advertisement emphasis (image vs. issue). Advertisement valence had a significant effect on dominance $F_{Valence}(1, 996) = 8.44$, $p < .05$, partial eta squared = .01; but emphasis had no significant effect on dominance $F_{Emphasis}(1, 996) = .65$, $p > .05$, partial eta squared = .00. There was also a significant valence by type interaction effect on dominance $F(1, 996) = 14.09$, $p < .05$, partial eta squared = .01. The positive image ad generated the highest dominance response, whereas the negative image ad generated the lowest dominance response. Furthermore, *t*-tests about arousal response to the same candidate between the two negative ad conditions indicated that there was stronger dominance response to the Candidate in the negative issue condition than the negative image condition $t(498) = 1.98$, $p < .05$, but there was no difference for the Opponent between the two negative conditions $t(498) = 1.17$, $p > .05$.

Model Estimation

The proposed model for this study was specified in Figure 4-1. The error variance of PIFC and PTFC was correlated because the two constructs overlap conceptually (Puto & Wells, 1984). Item response theory was used to estimate the latent scores from the observed scores of PIFC and PTFC, and the latent scores were placed in SEM. Correlation matrices were included in Appendix B.

Figure 4-2 specified the measurement model for candidate electability (hereinafter referred to as "CE") and emotional response (hereinafter referred to as "ER".) CE was indicated by issue competence, personal characteristics, and voting intention. Issue competence was measured with a one-item scale, and its error variance was set to be equal to zero. Personal characteristics was measured with a four-item scale, and its error variance was set to be equal to subtracting the scale reliability from 1. Voting intention was measured with a one-item scale, and its error

variance was set to be equal to zero. Emotional response was indicated by pleasure, arousal, and dominance measured with AdSAM® (Morris, 1995).

Positive image condition

Figure 4-3 reported factor loadings on CE and ER. Table 4-13 reported goodness of fit statistics. GFI (Goodness of Fit Index), NFI (Normed Fit Index), CFI (Comparative Fit Index), RMSEA (Root Mean Square Error of Approximation), and SRMR (Standardized Root Mean Square Residual) were chosen due to their popularity (Hair et al., 1995). The model had a good fit in this condition

Figure 4-4 reported standardized coefficients of the model. Based on the results, both PIFC and PTFC had a significant effect on CE. PTFC also had significant effects on MR and ER. Additionally, ER had a significant effect on CE, but MR had an insignificant effect on CE. Therefore, Hypothesis 5 was supported in the positive image condition.

Positive issue condition

Figure 4-5 reported factor loadings on CE and ER. Table 4-13 reported goodness of fit statistics. The model had a good fit.

Figures 4-6 reported standardized coefficients of the model. Based on the results, both PIFC and PTFC had significant effects on CE. PTFC had a significant effect on ER, but PIFC had a significant effect on MR. Additionally, both MR and ER had significant effects on CE, but ER appeared to have a stronger impact than MR. Therefore, Hypothesis 6 was supported in the positive issue condition.

Negative image condition for the Candidate

Figure 4-7 reported factor loadings on CE and ER. Table 4-13 reported goodness of fit statistics. The model had a good fit.

Figure 4-8 reported standardized coefficients of the path model. Both PIFC and PTFC had significant effects on CE. PIFC also had a significant effect on both MR and ER. PTFC had a significant effect on ER. ER had a significant effect on CE, but MR had an insignificant effect on CE. Therefore, Hypothesis 5 was supported in the negative image condition for the Candidate.

Negative image condition for the Opponent

Figure 4-9 reported factor loadings on CE and ER. Table 4-13 reported goodness of fit statistics. The model had a good fit.

Figures 4-10 reported standardized coefficients of the path model. PIFC had a significant and negative effect on ER. Both ER and MR had a significant impact on CE, but ER appeared to have a stronger effect on CE. Therefore, Hypothesis 5 was supported in the negative image condition for the Opponent.

Negative issue condition for the Candidate

Figure 4-11 reported factor loadings on CE and ER. Table 4-13 reported goodness of fit statistics. The model had a good fit.

Figures 4-12 reported standardized coefficients of the path model. Both PIFC and PTFC had a significant effect on CE, and PTFC had significant effects on both MR and ER. PIFC had a significant effect on MR. Neither MR nor ER had a significant impact on CE. Therefore, Hypothesis 5 was not supported in the negative issue condition for the Candidate.

Negative issue condition for the Opponent

Figure 4-13 reported factor loadings on CE and ER. Table 4-13 reported goodness of fit statistics. The model had a good fit.

Figures 4-14 reported standardized coefficients of the path model. Modification indices suggested a causal arrow from CE to ER, which was opposite to the arrow in the other

conditions. In this condition, PTFC had a significant and negative effect on ER but CE had a significant and positive effect on ER. The data suggested a different effect hierarchy (Vakratsas & Ambler, 1999) , and Hypothesis 5 was not supported in the negative issue condition for the Opponent.

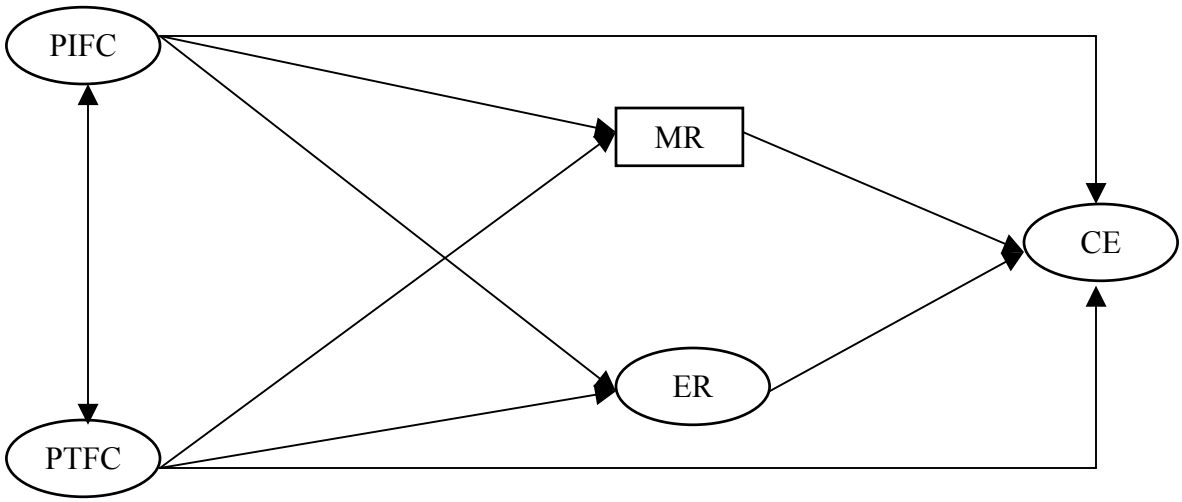

Figure 4-1. Full path diagram of PIFC, PTFC, MR (message reall), ER (emotional response), and CE (candidate electability)

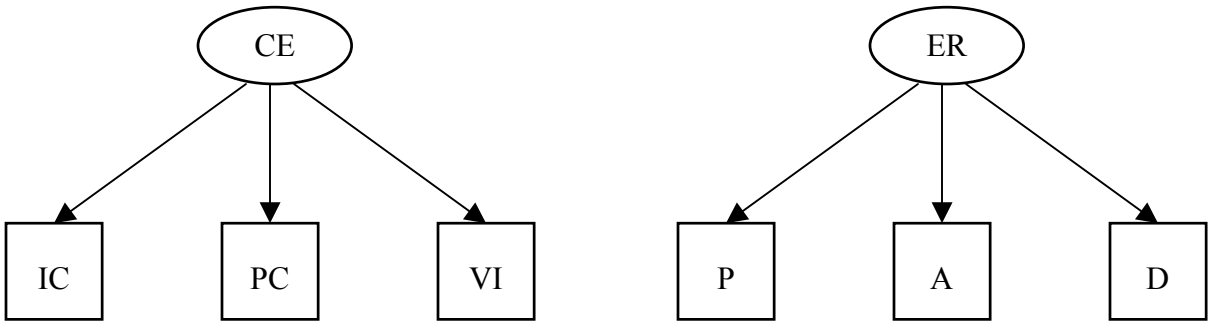

Figure 4-2. Measurement model for CE indicated with IC (issue competence), PC (personal characteristics), and VI (voting intention) and ER indicated with P (pleasure), A (arousal), and D (dominance)

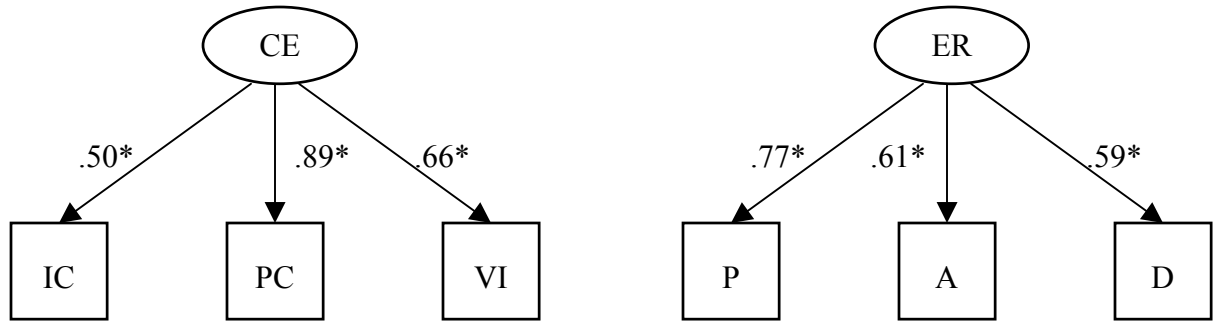

Figure 4-3. Factor loadings in positive image condition
* $p < .05$

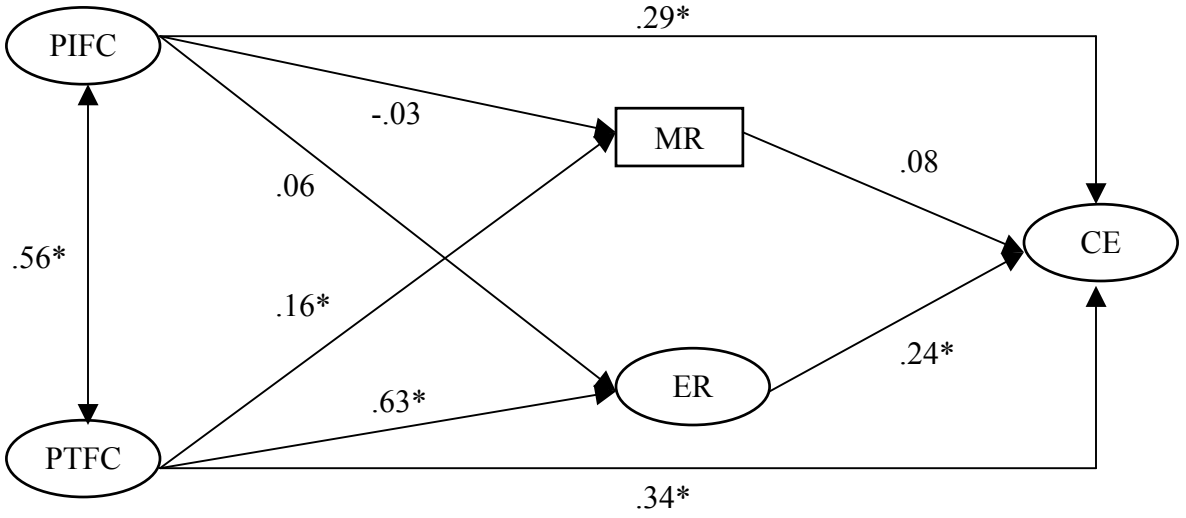

Figure 4-4. Path coefficients in positive image condition
* $p < .05$

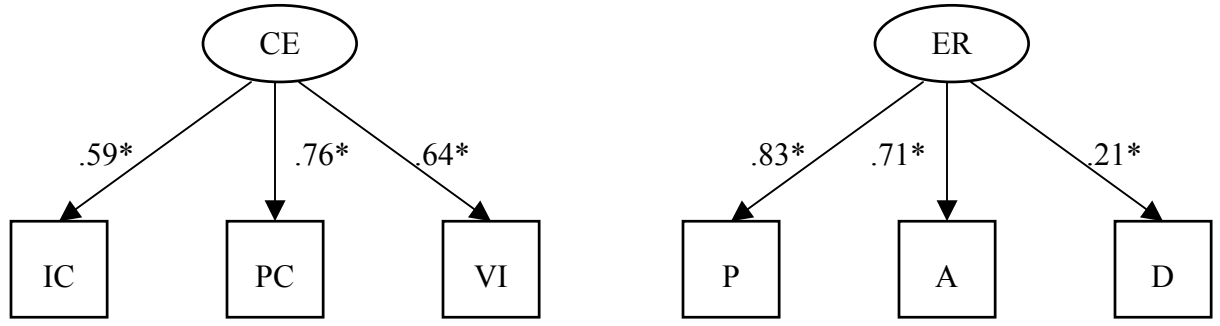

Figure 4-5. Factor loadings in positive issue condition
* $p < .05$

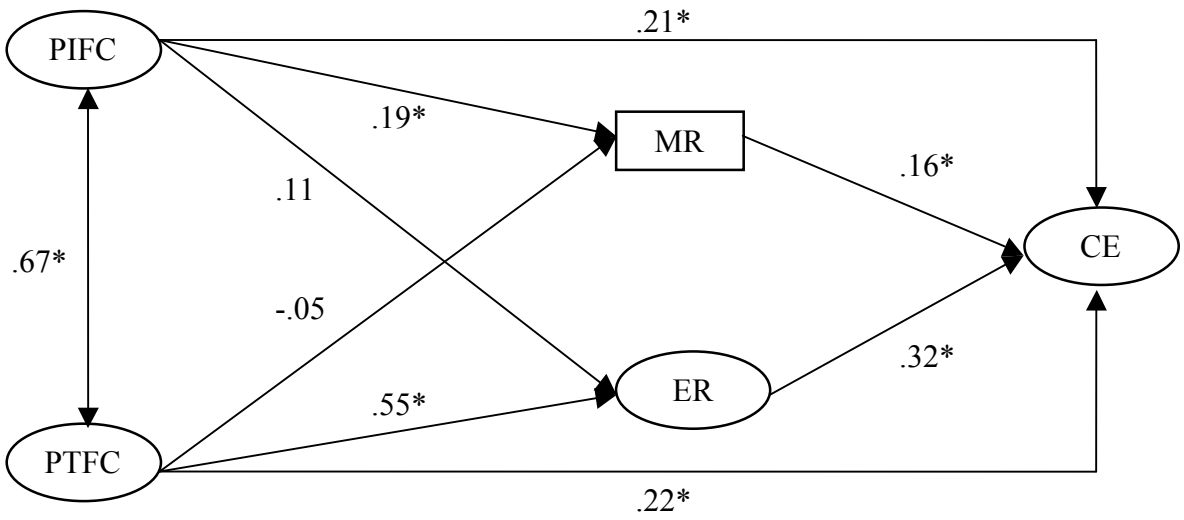

Figure 4-6. Path coefficients in positive issue condition
* $p < .05$

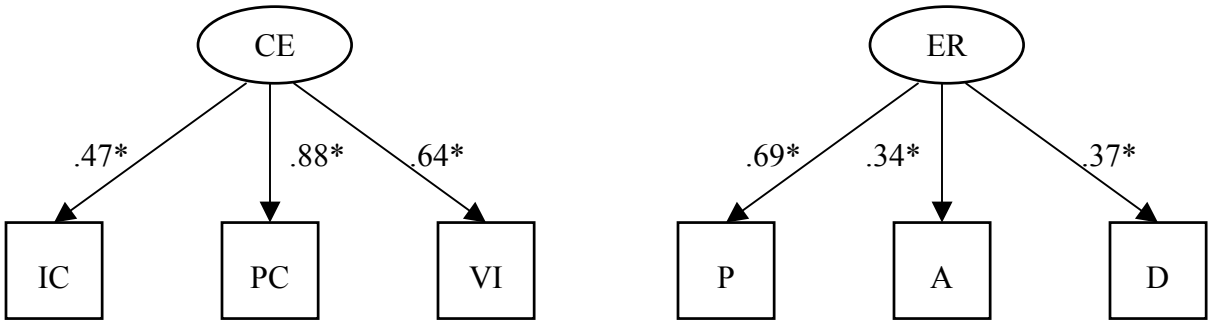

Figure 4-7. Factor loadings in negative image condition for the candidate
* $p < .05$

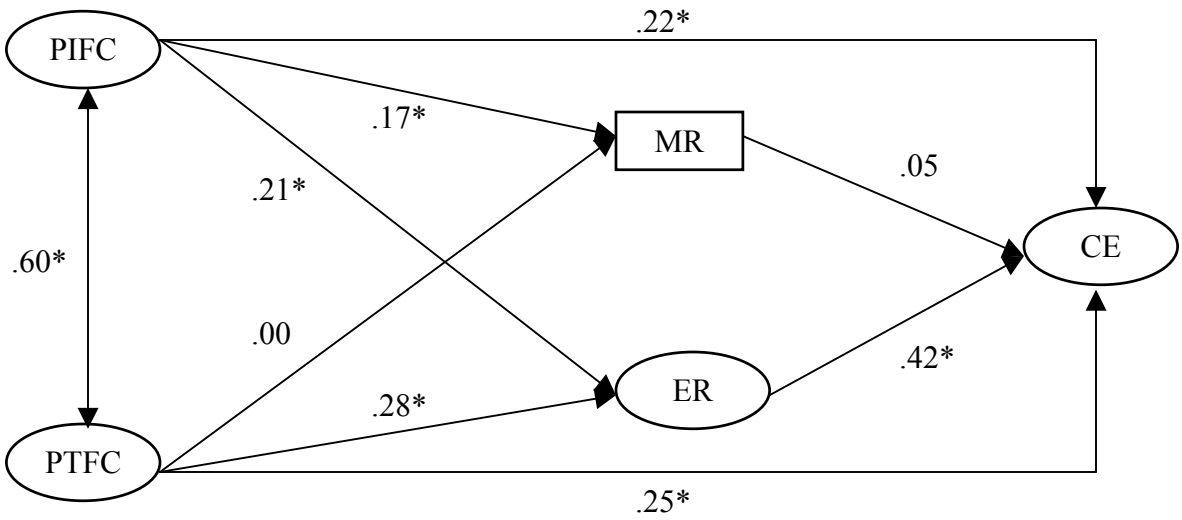

Figure 4-8. Path coefficients in negative image condition for the candidate
* $p < .05$

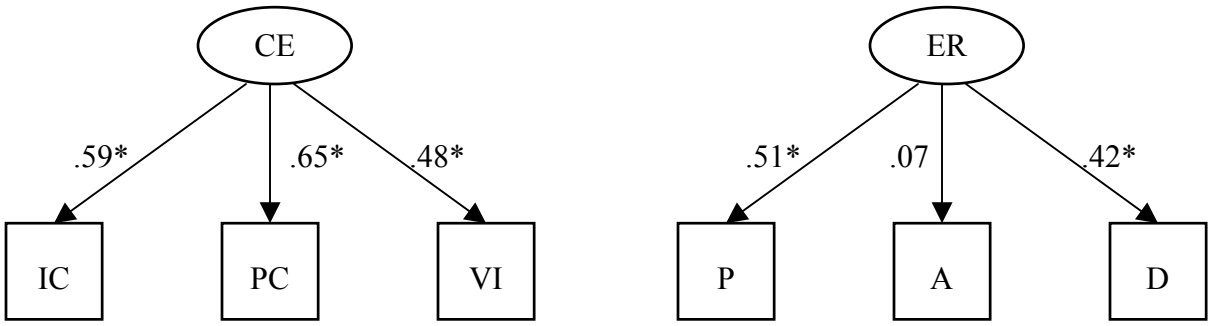

Figure 4-9. Factor loadings in negative image condition for the opponent
* $p < .05$

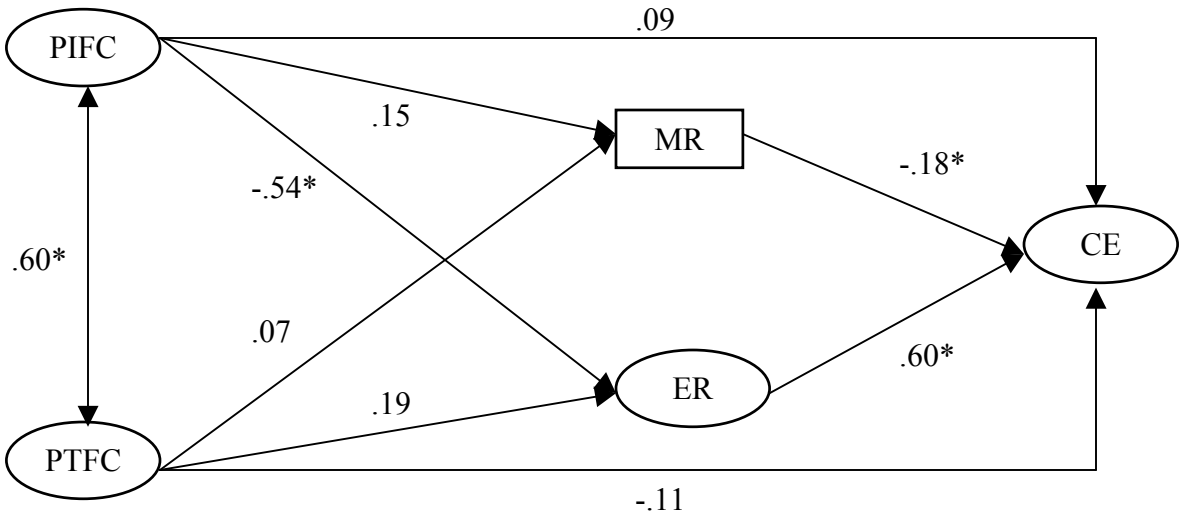

Figure 4-10. Path coefficients in negative image condition for the opponent
* $p < .05$

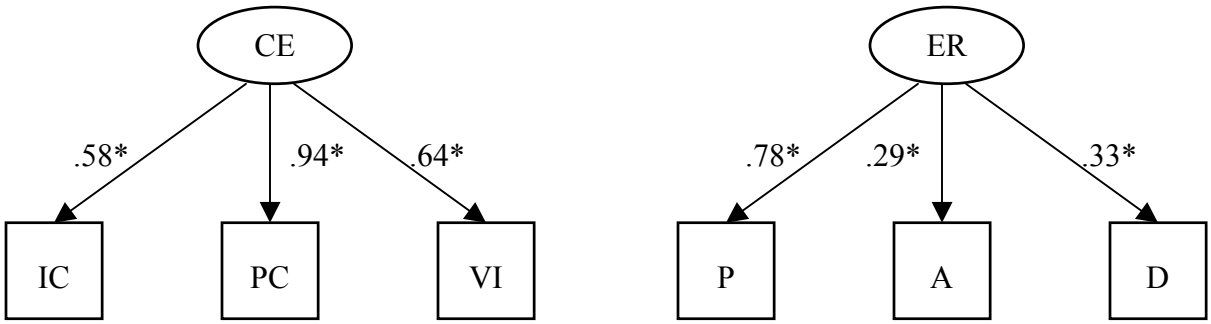

Figure 4-11. Factor loadings in negative issue condition for the candidate
* $p < .05$

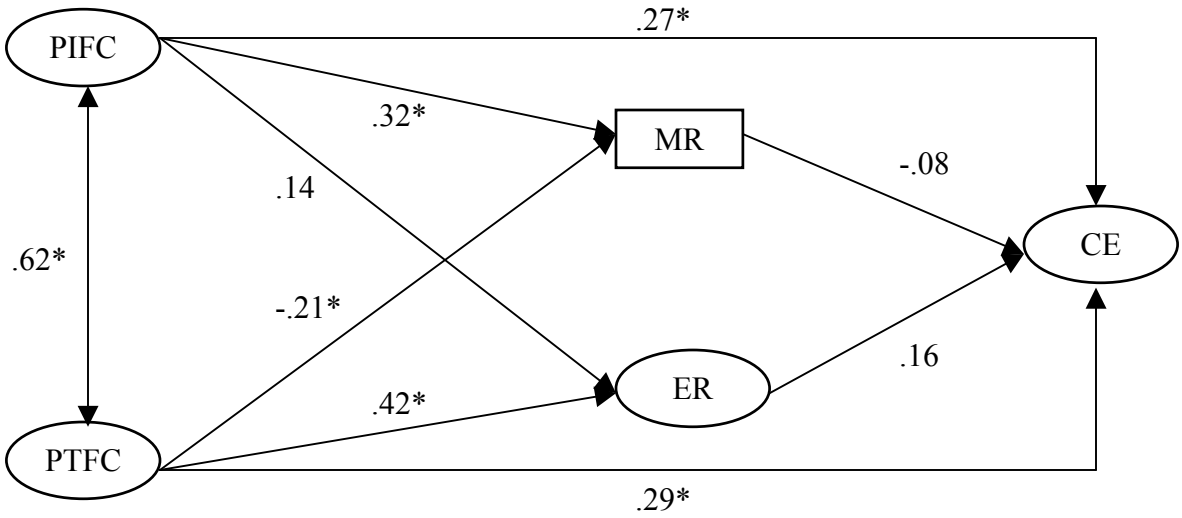

Figure 4-12. Path coefficients in negative issue condition for the candidate
* $p < .05$

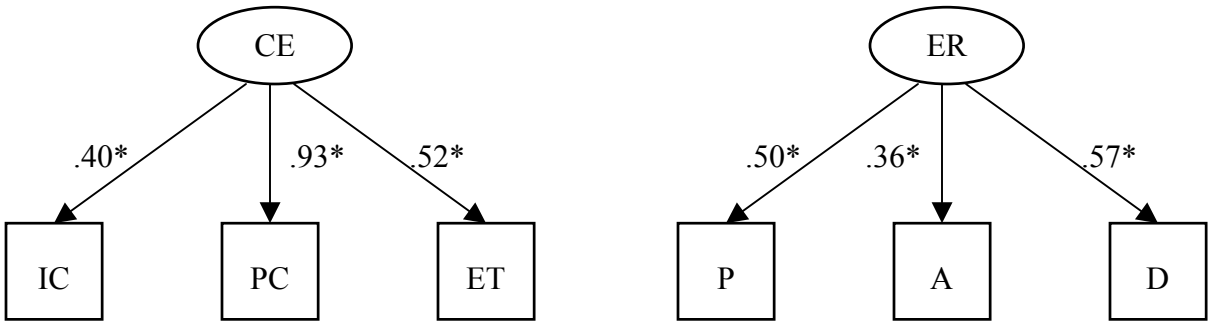

Figure 4-13. Factor loadings in negative issue condition for the opponent
* $p < .05$

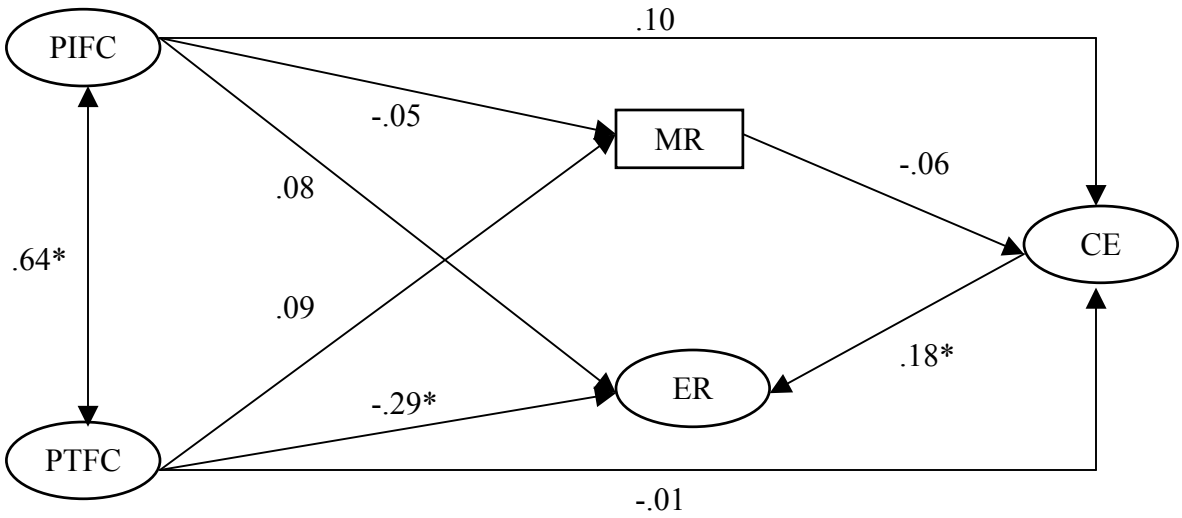

Figure 4-14. Path coefficients in negative issue condition for the opponent
* $p < .05$

Table 4-1. Personal qualities and political issues

	Personal qualities		Political issues		Paired samples test
	Mean	*SD*	Mean	*SD*	*t* (df = 43)
Positive image	5.61	.97	1.39	.69	24.20*
Positive issue	2.09	1.14	5.73	.87	-17.24*
Negative image candidate	4.30	1.58	1.41	.79	11.74*
Negative image opponent	5.20	1.37	1.84	1.29	13.69*
Negative issue candidate	1.57	.97	2.27	1.48	-3.63*
Negative issue opponent	2.41	1.53	5.59	1.23	-11.67*

* $p < .05$

Table 4-2. Familiarity with candidates

	Candidate		Opponent	
	Mean	*SD*	Mean	*SD*
Positive image	1.10	.37		
Positive issue	1.05	.22		
Negative image	1.17	.44	1.22	.48
Negative issue	1.12	.33	1.19	.40

Table 4-3. Information and transformation

	Information		Transformation		Paired Samples Test
	Mean	*SD*	Mean	*SD*	*t* (df = 249)
Positive image	3.41	1.09	4.20	1.14	-10.70*
Positive issue	4.46	1.20	3.12	1.10	21.19*
Negative image	3.06	.99	4.05	1.09	-18.26*
Negative issue	4.33	1.11	3.10	1.07	16.98*

* $p < .05$

Table 4-4. Reliability coefficients of informational/transformational scale

	Information	Transformation
Positive image	.81	.93
Positive issue	.81	.91
Negative image	.78	.87
Negative issue	.79	.89

Table 4-5. Message recall

	Image recall		Issue recall		Total recall	
	Mean	*SD*	Mean	*SD*	Mean	*SD*
Positive image	1.83	1.03	.05	.21	1.88	1.11
Positive issue	1.22	1.21	1.48	1.05	2.70	1.48
Negative image	3.08	2.13	.52	.81	3.60	2.03
Negative issue	2.28	2.39	2.23	2.81	4.52	4.09

Table 4-6. Candidate issue competence

	Candidate		Opponent		Paired samples test
	Mean	*SD*	Mean	*SD*	*t* (df = 249)
Positive image	3.98	.79			
Positive issue	4.85	1.14			
Negative image	4.71	1.15	3.08	1.17	17.07*
Negative issue	4.02	1.21	4.15	1.49	-1.11

* $p < .05$

Table 4-7. Candidate characteristics

	Candidate		Opponent		Paired samples test
	Mean	*SD*	Mean	*SD*	*t* (df = 249)
Positive image	4.33	.76			
Positive issue	4.70	1.20			
Negative image	3.63	1.03	3.31	.79	4.79*
Negative issue	3.22	1.09	3.77	1.06	-6.98*

* $p < .05$

Table 4-8. Reliability coefficients of candidate characteristics scale

	Candidate	Opponent
Positive image	.76	
Positive issue	.93	
Negative image	.85	.83
Negative issue	.87	.93

Table 4-9. Voting intention

	Candidate		Opponent		Paired samples test
	Mean	*SD*	Mean	*SD*	*t* (df = 249)
Positive image	2.49	.72			
Positive issue	2.98	.84			
Negative image	2.44	.90	2.36	.80	1.27
Negative issue	2.04	.87	2.40	.98	-4.75*

* $p < .05$

Table 4-10. Pleasure

	Candidate		Opponent		Paired samples test
	Mean	*SD*	Mean	*SD*	*t* (df = 249)
Positive image	5.54	1.31			
Positive issue	5.98	.78			
Negative image	4.82	1.34	3.75	1.48	8.94*
Negative issue	4.75	1.17	3.85	1.37	8.40*

* $p < .05$

Table 4-11. Arousal

	Candidate		Opponent		Paired samples test
	Mean	*SD*	Mean	*SD*	*t* (df = 249)
Positive image	3.71	1.91			
Positive issue	4.85	1.12			
Negative image	4.39	1.75	4.68	1.87	-2.76*
Negative issue	4.13	1.72	4.15	1.69	-.18

* $p < .05$

Table 4-12. Dominance

	Candidate		Opponent		Paired samples test
	Mean	*SD*	Mean	*SD*	*t* (df = 249)
Positive image	5.65	1.80			
Positive issue	5.20	1.07			
Negative image	4.99	1.70	4.93	1.72	.58
Negative issue	5.28	1.59	5.12	1.72	1.71

Table 4-13. Fit indices in experimental conditions

	χ^2	df	GFI	NFI	CFI	RMSEA	SRMR
Positive image	66.69	22	.94	.94	.95	.10	.05
Positive issue	79.85	22	.94	.93	.94	.10	.07
Negative image candidate	32.33	22	.97	.95	.98	.04	.05
Negative image opponent	64.20	22	.95	.82	.87	.09	.07
Negative issue candidate	52.62	22	.96	.93	.96	.07	.05
Negative issue opponent	51.76	22	.95	.84	.89	.08	.07

CHAPTER 5
DISCUSSION

Overview

This study was designed to investigate the effects of issue/image and positive/negative political advertisements on message processing and voting behavior with a new measurement tool of message learning, i.e. the informational/transformational scale (Puto & Wells, 1984). The constructs in this study were selected based on a chain reaction model of advertising effects (Lavidge & Steiner, 1961) and the relationships between them were analyzed with *t*-Tests, ANOVA, MANOVA, and structural equation modeling. This study generated very interesting results regarding the mechanism through which different types of political advertisements were processed. In the following sections, findings related to the hypotheses and research questions are presented.

Perception of Advertising Content

Hypothesis 1 proposed that issue ads are perceived as more informational than transformational whereas image ads are perceived as more transformational than informational. This was supported, as the PIFC and PTFC scores was significantly different for each ad and the difference was in line with the primary content focus of the ad. Both the positive and negative image ads were perceived as more transformational than informational, and the transformational scores were above the scale mid-point whereas the informational scores were below the scale mid-point. Both the positive and negative issue ads were perceived as more informational than transformational, and the informational scores were above the scale mid-point whereas the transformational scores were below the scale mid-point. The findings confirmed the conceptual similarity between information/transformation and issue/image advocated in previous studies (Shen, 2007; Shen & Kim, 2006).

Memory

Hypothesis 2 proposed that issue ads are bettered remembered than image ads. This was supported, as the *F*-test statistic for emphasis (image vs. issue) was significant and the total recall of candidate characteristics and candidate issue stands in the two issue ad conditions was higher than that in the two image ad conditions. The result confirmed previous findings about the superiority of issue ads in generating higher recall than image ads (Kaid et al., 1992).

Research Question 1 asked how valence (positive vs. negative) influences recall. The *F*-test statistic for valence was also significant and the total recall of candidate characteristics and candidate issue stands in the two negative ad conditions was higher than that in the two positive ad conditions. Therefore, the answer was that negative ads were better remembered than positive ads.

Research Question 2 asked how valence interacts with emphasis on recall. The *F*-test statistic for the interaction term was not significant. Therefore, the answer was that valence did not interact with emphasis on recall.

The results about recall should be interpreted with caution. One possible methodological flaw in this study was that it remained unchecked whether the four ads had the same amount of message units for recall. Issue ads might be better recalled than image ads because they had more message units than image ads. Negative ads might be better recalled than positive ads because they had more candidates (the Candidate and the Opponent) than positive ads (the Candidate only). It is highly worthwhile to calibrate the message units and keep the amount of the units constant across experimental conditions in future research on recall of political ads.

Candidate Electability

Issue, Characteristics, and Voting Intention

Candidate electability was measured with issue competence, candidate characteristics, and voting intention. The results did not provide consistent answer or support to Research Question 3 and Hypotheses 3 and 4. In fact, the results largely depended on the focus of each measurement and the status of the candidates. For example, in terms of issue competence, issue ads generated more favorable candidate attitude than image ads, but positive ads did not differ from negative ads. In terms of candidate characteristics and voting intention, positive ads generated more favorable candidate attitude than negative ads, but there was no difference between issue and image ads.

Additionally, the effects of two negative ads varied between the two candidates. For the Candidate, the negative issue ad led to less favorable candidate electability than the negative image ad. By sharp contrast, for the Opponent, the negative issue ad led to more favorable candidate electabililty than the negative image ad. The negative issue ad backfired on the Candidate in terms of candidate characteristics because the Candidate was less likable than the Opponent in that condition, which was inconsistent with previous findings about the effectiveness of negative issue ads to overcome the backlash syndrome (Johnson-Cartee & Copeland, 1989; Kahn & Geer, 1994; Sonner, 1998). In future research, it is highly worthwhile to reexamine the relationship between ad content and the backlash effect.

Cognition and Emotion

Hypothesis 5 proposed that emotional response has a larger impact on candidate electability than cognitive response measured with message recall. This was analyzed through path analysis, and the hypothesis was supported in most conditions except the negative issue condition.

In the positive image condition, emotional response had a significant effect on candidate electability whereas cognitive response had an insignificant effect on candidate electability. In the positive issue condition, both emotional response and cognitive response had a significant positive impact on candidate electability, but the emotional response appeared to have a stronger effect on candidate electability.

In the negative image for the Candidate condition, emotional response had a significant effect on candidate electability whereas cognitive response had an insignificant effect on candidate electability. In the negative image for the Opponent condition, both emotional response and cognitive response had a significant positive impact on candidate electability, but the emotional response appeared to have a stronger effect on candidate electability.

In the negative issue for the Candidate condition, both emotional and cognitive responses had an insignificant effect on candidate electability. In the negative issue for the Opponent condition, again both emotional and cognitive responses had an insignificant effect on candidate electability. In fact, in that condition, there was a significant effect from candidate electability to emotional response.

The results in the positive ad condition further confirmed the conceptual similarity among image, transformation and emotion. Image is analogous to transformation (Shen, 2007) and transformation focuses on the emotional aspect of advertising (Puto & Wells, 1984); therefore, it is not surprising that emotional response was much more powerful than cognitive response in determining candidate electability in the positive image condition. Similarly, issue is analogous to information (Shen, 2007) and information focuses on the cognitive aspect of advertising (Puto & Wells, 1984); therefore, cognitive response gained significance in the positive issue condition.

The results in the negative ad condition are also very interesting. In the negative image for the Candidate condition, the effects of emotional and cognitive response were identical to those in the positive issue condition. In the negative image for the Opponent condition, the effects were identical to those in the positive image condition. A close look into the message recall for this condition indicated that the participants inferred unmentioned issues, such as campaign finance and tax, from the negative image ad. It was likely that those implicitly inferred issues influenced the effects of emotional and cognitive responses in a way similar to the explicitly mentioned tax issue in the positive issue condition.

Furthermore, the insignificant effects of both emotional and cognitive response in the negative issue for the Candidate condition may be due to limited message about the candidate. The only message about the Candidate was a still image of the Candidate and a voice-over "I'm Chris Choloca. I approve this message." The opposite direct effect from candidate electability to emotional response in the negative issue for the Opponent condition might mean that the participants had some existing attitude about candidates who advocated higher tax, and this existing attitude influenced emotional response to the Opponent who also supported higher tax.

Memory, Emotion, and Candidate Electability

Research Questions 4 and 5 investigated the complete chain reaction process from message learning, message recall, emotion, and electability in all the experimental conditions. This was also analyzed through path analysis.

In the positive image condition, PTFC had a significant impact on message recall whereas PIFC had an insignificant impact on message recall. This pattern made good sense because image and transformational cues were the primary content of the positive image ad. PTFC also had a significant impact on emotional response whereas PIFC still had an insignificant impact on emotional response. The relationship between PTFC and emotional response was well

understandable because transformational cues were the emotional message of an ad (Puto & Wells, 1984). Additionally, both PIFC and PTFC had a significant and direct impact on candidate electability.

In the positive issue condition, PTFC had an insignificant impact on message recall whereas PIFC had a significant impact on message recall. This pattern made good sense because issue and informational cues were the primary content of the positive issue ad. Both PTFC and PIFC had a significant impact on emotional response. In other words, besides the conceptually determined relationship between PTFC and emotional response (Puto & Wells, 1984), PIFC, the primary content in the positive issue ad, served as another important source of emotional response. Additionally, both PIFC and PTFC had a significant and direct impact on candidate electability.

In the negative image for the Candidate condition, PTFC had an insignificant impact on message recall whereas PIFC had a significant impact on message recall. Both PTFC and PIFC had a significant impact on emotional response. The patterns in this condition were opposite to those in the positive image condition but were identical to that in the positive issue condition for the same candidate. There might be inferred issue learning, such as campaign finance and tax, from the negative image condition, which led to issue-induced effects as recorded in the positive issue condition. Again, both PIFC and PTFC had a significant and direct impact on candidate electability in this condition.

In the negative image for the Opponent condition, neither PTFC nor PIFC had a significant impact on message recall. PTFC had a significant impact on emotional response, which could be explained with the conceptual similarity between transformation and emotion (Puto & Wells, 1984). PIFC also had a significant impact on emotional response, which was also found in the

positive issue condition. It was likely that the inferred issue learning became a significant source of emotional response. The impact from PIFC to emotional response was negative, which was in line with the valence of the ad. Finally, neither PIFC nor PTFC had a significant and direct impact on candidate electability in this condition.

In the negative issue for the Candidate condition, both PIFC and PTFC had a significant impact on message recall, and the impact from PTFC was negative. PTFC also had a significant impact on emotional response, whereas PIFC had an insignificant impact on emotional response. The patterns in this condition seemed to suggest that transformational cues or the secondary content in this condition had a stronger impact on message recall and emotional response than informational cues or the primary content. Finally, both PIFC and PTFC had a significant and direct impact on candidate electability in this condition.

In the negative issue for the Opponent condition, neither PTFC nor PIFC had a significant impact on message recall. PTFC had a significant impact on emotional response, whereas PIFC had an insignificant impact on emotional response. Neither PIFC nor PTFC had a significant and direct impact on candidate electability in this condition. Finally, unlike the other conditions, the causal arrow between emotional response and candidate attitude was from candidate electability to emotional response.

Limitations and Future Research

There are a few methodological and theoretical limitations in this study. They should be well addressed in future research.

First, message recall was a problematic construct in the study. There was no check on the amount of message units in each ad, and it is impossible to rule out that some ads were better recalled because there were more message units in them. It is also questionable to add message recall into the original chain reaction model. College students are known for low involvement

with political campaigns (Yoon et al., 2005) and low involvement makes recall an inadequate predictor of memory-based effects (Petty, Cacioppo, & Goldman, 1981). In future research, more efforts should be spent on equivalent amount of message units for recall and enough involvement to generate adequate impact from recall to other behavioral variables.

Second, the Scale might not fit negative advertising. Unlike most product advertising and positive political advertising which features one product or one candidate, there are two candidates in a negative ad and the perception of informational and transformational cues could be very different. It is possible that the Scale might not adequately meet this increased complexity of message content. The participants might experience difficulty in choosing the right answers to the Scale items. The increased measurement error, as indicated by lower reliability coefficients in the negative ad condition, led to a bad fit of the model to the data. This problem was alleviated with the latent PIFC and PTFC scores from IRT because they were assumed to have zero measurement error. In future research, it is very important to develop new PIFC and PTFC items for negative advertising.

The use of college students was another limitation. College students generally have low interests in politics (Yoon et al., 2005). This characteristic is a possible impediment to the generalizability of the study results in regard to the broader voter population. In future research, it is very important to include non-student population to test the proposed model.

A further limitation may be inherent in the limited number of ads for this study. In future research, it is very worthwhile to including a broader spectrum of issues and image at different levels of political races.

CHAPTER 6
IMPLICATIONS

This study provides various theoretical and managerial implications to political campaigning practitioners and researchers. In order to investigate the underlying mechanism of candidate attitude formulation in response to political advertising, this study was among the first to empirically test the chain reaction theory of advertising effects (Lavidge & Steiner, 1961). In addition, this study used the informational/transformational scale (Puto & Wells, 1984) to measure message learning, which has never been used for political advertisements, in spite of its theoretical applicability to issue and image political advertisements (Shen, 2007). Furthermore, this study balanced both emotional and cognitive antecedent to candidate electability with the use of a non-verbal emotional measure known as AdSAM® (Morris, 1995) and message recall (Petty et al., 1981). This study also balanced the emotional and cognitive perspectives of candidate electability with a tripartite structure composed of issue competence, candidate characteristics, and voting intention (Kahn & Geer, 1994). The attempt to link information/transformation, issue/image, and cognition/emotion proved a legitimate approach to examine the dynamics of issue/image and positive/negative advertisements in voting behavior. Finally, besides structural equation modeling, item response theory was used to estimate latent response to issue and image content in political advertisement and improve model fitting because of reduced measurement error. This approach is well applicable to scale-based research.

The managerial implications are particularly evident from a copy-testing standpoint for political campaigning. With some modifications, the informational/transformational scale can be a valid measure of message learning for issue and image in political advertisements, especially for a new and unfamiliar candidate. The enhanced calibration of advertising content will eventually help identify a manner in which issue and image can be managed that will lead to

optimal mental processing and favorable candidate evaluation. The real-life complexity of using positive or negative issue and image to support or attack a candidate was also investigated in this study, and the four message conditions in this research can be used as the base category for a broader range of message strategies. Furthermore, emotional response had a stronger impact than cognitive response on candidate electability, or it was what the respondents felt about the candidates rather than what they remembered about the candidates from the political advertisements that shaped their judgment on the candidate. This finding will provide directions to create effective advertisements that serve to create the right emotion for the right candidate. Finally, given the enormous amount of investment in political advertising, this line of research will become increasing critical in light of the value of democracy and informed voting decision.

APPENDIX A
QUESTIONNAIRES

Pretest

1. How much did you learn about the government policies/political issues related to the candidate from the ad you just watched?

Very little 1 2 3 4 5 6 7 A great deal

2. How much did you learn about the personal qualities related to the candidate from the ad you just watched?

Very little 1 2 3 4 5 6 7 A great deal

3. What political issues were mainly associated the candidate in the ad?

_____

4. What characteristics of the candidate stand out in your mind?
Describe the candidate in adjective forms

_____

Main Survey Sample (Negative Advertisement)

Instructions (continued)
Q1. Have you ever watched this advertisement before?
<1> Never <2> A few times <3> Many times

Q2. Please use the scale below to indicate your familiarity with **Chris Chocola**, the candidate.
<1> Very unfamiliar
<2> Unfamiliar
<3> Neither unfamiliar nor familiar
<4> Familiar
<5> Very familiar

Q3. Please use the scale below to indicate your familiarity with **Joe Donnelly**, the candidate's **opponent**.
<1> Very unfamiliar
<2> Unfamiliar
<3> Neither unfamiliar nor familiar
<4> Familiar
<5> Very familiar

Please use the scale to indicate how you feel about Chris Chocola after watching the ad.

HAPPY or ELATED		**UNHAPPY or SAD**
STIMULATED or INVOLVED		**CALM or BORED**
NOT IN CONTROL		**IN-CONTROL or EMPOWERED**

Please use the scale to indicate how you feel about Joe Donnelly after watching the ad.

HAPPY or ELATED	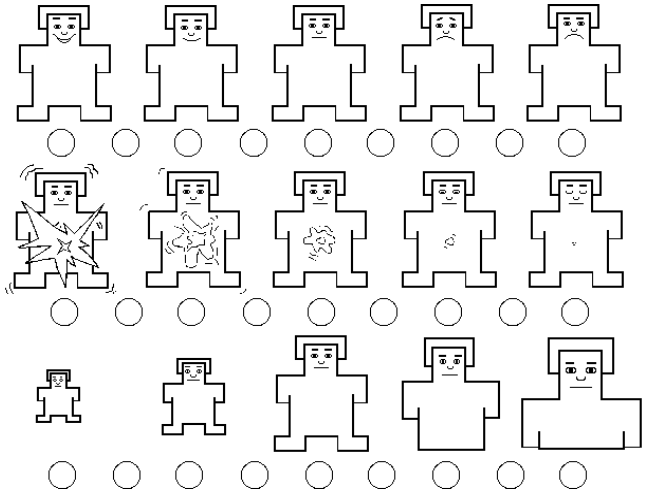	**UNHAPPY or SAD**
STIMULATED or INVOLVED		**CALM or BORED**
NOT IN CONTROL		**IN-CONTROL or EMPOWERED**

Instructions (Continued)
Please circle the number that best indicates the degree of your agreement or disagreement with each of the statements listed below. There are no correct or incorrect answers to those statements.

Questions

Q1A. I learned something from this advertisement that I didn't know before about Chris Chocola, the candidate.

-4	-3	-2	-1	0	1	2	3	4
very strong disagreement								very strong agreement

Q1B. I learned something from this advertisement that I didn't know before about Joe Donnelly, the candidate's opponent.

-4	-3	-2	-1	0	1	2	3	4
very strong disagreement								very strong agreement

Q2. I would like to have an experience like the one shown in the advertisement.

-4	-3	-2	-1	0	1	2	3	4
very strong disagreement								very strong agreement

Q3. The advertisement did not seem to be speaking directly to me.

-4	-3	-2	-1	0	1	2	3	4
very strong disagreement								very strong agreement

Q4. There is nothing special about Chris Chocola, the candidate, that makes him different from Joe Donnelly, the candidate's opponent.

-4	-3	-2	-1	0	1	2	3	4
very strong disagreement								very strong agreement

Q5. While I watched this advertisement, I thought how Chris Chocola, the candidate, might be useful to me.

-4	-3	-2	-1	0	1	2	3	4
very strong disagreement								very strong agreement

Q6. The advertisement did not teach me what to look for when choosing Chris Chocola, the candidate.

-4	-3	-2	-1	0	1	2	3	4
very strong disagreement								very strong agreement

Q7. This advertisement was meaningful to me.

-4	-3	-2	-1	0	1	2	3	4
very strong disagreement								very strong agreement

Q8. This advertisement was very uninformative.

-4	-3	-2	-1	0	1	2	3	4
very strong disagreement								very strong agreement

Q9. Chris Chocola, the candidate, fits my lifestyle very well.

-4	-3	-2	-1	0	1	2	3	4
very strong disagreement								very strong agreement

Q10. I could really relate to this advertisement.

-4	-3	-2	-1	0	1	2	3	4
very strong disagreement								very strong agreement

Q11. Choosing Chris Chocola, the candidate, makes me feel good about myself.

-4	-3	-2	-1	0	1	2	3	4
very strong disagreement								very strong agreement

Q12. If they had to, Chris Chocola's party could provide evidence to support the claims made in this advertisement.

-4	-3	-2	-1	0	1	2	3	4
very strong disagreement								very strong agreement

Q13. It's hard to give a specific reason, but somehow Chris Chocola, the candidate, is not really for me.

-4	-3	-2	-1	0	1	2	3	4
very strong disagreement								very strong agreement

Q14. This advertisement did not really hold my attention.

-4	-3	-2	-1	0	1	2	3	4
very strong disagreement								very strong agreement

Q15A. This advertisement reminded me of some important facts about Chris Chocola, the candidate, which I already knew.

-4	-3	-2	-1	0	1	2	3	4
very strong disagreement								very strong agreement

Q15B. This advertisement reminded me of some important facts about Joe Donnelly, the candidate's opponent, which I already knew.

-4	-3	-2	-1	0	1	2	3	4
very strong disagreement								very strong agreement

Q16. If I could change my lifestyle, I would make it less like the people who choose Chris Chocola, the candidate.

-4	-3	-2	-1	0	1	2	3	4
very strong disagreement								very strong agreement

Q17A. When I think of Chris Chocola, the candidate, I think of this advertisement.

-4	-3	-2	-1	0	1	2	3	4
very strong disagreement								very strong agreement

Q17B. When I think of Joe Donnelly, the candidate's opponent, I think of this advertisement.

-4	-3	-2	-1	0	1	2	3	4
very strong disagreement								very strong agreement

Q18. I felt as though I were right there in the advertisement, experiencing the same thing.

-4	-3	-2	-1	0	1	2	3	4
very strong disagreement								very strong agreement

Q19. I can now accurately compare Chris Chocola, the candidate, with Joe Donnelly, the candidate's opponent, on matters that are important to me.

-4	-3	-2	-1	0	1	2	3	4
very strong disagreement								very strong agreement

Q20. This advertisement did not remind me of any experience or feelings I've had in my own life.

-4	-3	-2	-1	0	1	2	3	4
very strong disagreement								very strong agreement

Q21. I would have more confidence in my ability to judge the merits of choosing Chris Chocola, the candidate, now than before I saw this advertisement.

-4	-3	-2	-1	0	1	2	3	4
very strong disagreement								very strong agreement

Q22. It is the kind of advertisement that keeps running through your head after you've seen it.

-4	-3	-2	-1	0	1	2	3	4
very strong disagreement								very strong agreement

Q23. It's hard to put into words, but this advertisement leaves me with a good feeling about Chris Chocola, the candidate.

-4	-3	-2	-1	0	1	2	3	4
very strong disagreement								very strong agreement

Q24. What personal qualities/characteristics of Chris Chocola, the candidate, stand out in your mind?

Describe the candidate in adjective forms

_____

Q25. What personal qualities/characteristics of Joe Donnelly, the candidate's opponent, stand out in your mind?

Describe the candidate in adjective forms

_____

Q26. What government policies/political issues were mainly associated with Chris Chocola, the candidate, in the ad?

_____

Q27. What government policies/political issues were mainly associated with Joe Donnelly, the candidate's opponent, in the ad?

_____

Q28. What is your best guess about Chris Chocola's competence in dealing with issues related to tax?

1	2	3	4	5	6	7
very competent						very incompetent

Q29. What is your best guess about Joe Donnelly's competence in dealing with issues related to tax?

1	2	3	4	5	6	7
very competent						very incompetent

Q30. How much would you agree that "trustworthy" fits your impression of Chris Chocola?

1	2	3	4	5	6	7
strongly disagree						strongly agree

Q31. How much would you agree that "provides strong leadership" fits your impression of Chris Chocola?

1	2	3	4	5	6	7
strongly disagree						strongly agree

Q32. How much would you agree that "hardworking" fits your impression of Chris Chocola?

1	2	3	4	5	6	7
strongly disagree						strongly agree

Q33. How much would you agree that "knowledgeable" fits your impression of Chris Chocola?

1	2	3	4	5	6	7
strongly disagree						strongly agree

Q34. How much would you agree that "trustworthy" fits your impression of Joe Donnelly?

1	2	3	4	5	6	7
strongly disagree						strongly agree

Q35. How much would you agree that "provides strong leadership" fits your impression of Joe Donnelly?

1	2	3	4	5	6	7
strongly disagree						strongly agree

Q36. How much would you agree that "hardworking" fits your impression of Joe Donnelly?

1	2	3	4	5	6	7
strongly disagree						strongly agree

Q37. How much would you agree that "knowledgeable" fits your impression of Joe Donnelly?

1	2	3	4	5	6	7
strongly disagree						strongly agree

Q38. How likely would you vote for Chris Chocola?

1	2	3	4	5
very unlikely	unlikely	have no opinion	likely	very likely

Q39. How likely would you vote for Joe Donnelly?

1	2	3	4	5
very unlikely	unlikely	have no opinion	likely	very likely

APPENDIX B
CORRELATION MATRICES

Table B-1. Positive image condition

Variable	1	2	3	4	5	6	7	8	9
1. PIFC	1.00								
2. PTFC	0.56	1.00							
3. Message Recall	0.06	0.14	1.00						
4. Issue Competency	0.34	0.27	0.02	1.00					
5. Personal Characteristics	0.50	0.57	0.17	0.43	1.00				
6. Vote Intention	0.44	0.58	0.03	0.37	0.57	1.00			
7. Pleasure	0.36	0.58	0.04	0.29	0.44	0.45	1.00		
8. Arousal	0.29	0.55	0.09	0.16	0.34	0.32	0.56	1.00	
9. Dominance	0.26	0.29	0.03	0.29	0.25	0.22	0.55	0.34	1.00

Table B-2. Positive issue condition

Variable	1	2	3	4	5	6	7	8	9
1. PIFC	1.00								
2. PTFC	0.67	1.00							
3. Message Recall	0.16	0.08	1.00						
4. Issue Competency	0.28	0.29	0.23	1.00					
5. Personal Characteristics	0.49	0.52	0.21	0.47	1.00				
6. Vote Intention	0.42	0.52	0.20	0.35	0.47	1.00			
7. Pleasure	0.42	0.55	0.05	0.32	0.44	0.44	1.00		
8. Arousal	0.34	0.43	0.14	0.28	0.39	0.30	0.58	1.00	
9. Dominance	-0.04	-0.01	-0.14	0.15	-0.02	0.05	0.20	0.15	1.00

Table B-3. Negative image condition for the candidate

Variable	1	2	3	4	5	6	7	8	9
1. PIFC	1.00								
2. PTFC	0.60	1.00							
3. Message Recall	0.17	0.10	1.00						
4. Issue Competency	0.32	0.26	0.15	1.00					
5. Personal Characteristics	0.48	0.50	0.09	0.42	1.00				
6. Vote Intention	0.37	0.43	0.08	0.25	0.57	1.00			
7. Pleasure	0.24	0.28	-0.08	0.25	0.37	0.29	1.00		
8. Arousal	0.22	0.22	0.06	0.11	0.26	0.22	0.19	1.00	
9. Dominance	0.12	0.08	-0.01	0.13	0.11	0.15	0.30	0.13	1.00

Table B-4. Negative image condition for the opponent

Variable	1	2	3	4	5	6	7	8	9
	1.00								
2. PTFC	0.60	1.00							
3. Message Recall	0.19	0.16	1.00						
4. Issue Competency	-0.18	-0.20	-0.17	1.00					
5. Personal Characteristics	-0.17	-0.04	-0.21	0.38	1.00				
6. Vote Intention	-0.07	-0.02	-0.02	0.23	0.36	1.00			
7. Pleasure	-0.30	-0.10	-0.18	0.31	0.15	0.16	1.00		
8. Arousal	0.18	0.20	0.09	0.08	0.01	0.07	0.03	1.00	
9. Dominance	-0.07	-0.01	-0.01	0.17	0.20	0.13	0.22	-0.01	1.00

Table B-5. Negative issue condition for the candidate

Variable	1	2	3	4	5	6	7	8	9
1. PIFC	1.00								
2. PTFC	0.62	1.00							
3. Message Recall	0.19	-0.01	1.00						
4. Issue Competency	0.29	0.38	-0.02	1.00					
5. Personal Characteristics	0.46	0.48	-0.02	0.54	1.00				
6. Vote Intention	0.38	0.49	-0.12	0.42	0.59	1.00			
7. Pleasure	0.31	0.38	-0.05	0.17	0.29	0.24	1.00		
8. Arousal	0.16	0.26	0.11	0.03	0.13	0.08	0.22	1.00	
9. Dominance	0.04	0.05	0.02	-0.04	0.12	0.17	0.26	0.11	1.00

Table B-6. Negative issue condition for the opponent

Variable	1	2	3	4	5	6	7	8	9
1. PIFC	1.00								
2. PTFC	0.64	1.00							
3. Message Recall	0.01	0.06	1.00						
4. Issue Competency	-0.09	-0.04	-0.06	1.00					
5. Personal Characteristics	0.11	0.07	-0.05	0.36	1.00				
6. Vote Intention	-0.06	-0.12	-0.03	0.35	0.47	1.00			
7. Pleasure	-0.09	-0.21	-0.12	0.12	0.12	0.22	1.00		
8. Arousal	0.08	0.09	0.04	-0.01	0.13	0.02	0.14	1.00	
9. Dominance	0.04	-0.04	-0.03	-0.04	-0.03	0.01	0.29	0.22	1.00

LIST OF REFERENCES

Aaker, D. A., & Bruzzone, D. E. (1985). Causes of irritation in advertising. *Journal of Marketing, 49*, 47-57.

Aaker, D. A., & Norris, D. (1982). Characteristics of TV commercials percieved as informative. *Journal of Advertising Research, 22*, 61-70.

Aaker, D. A., & Stayman, D. M. (1992). Implementing the concept of transformational advertising. *Psychology & Marketing, 9*, 237-253.

Aaker, D. A., Stayman, D. M., & Hagerty, M. R. (1986). Warmth in advertising: Measurement, impact, and sequence effects. *Journal of Consumer Research, 12*, 365-381.

Aaker, J. L. (1997). Dimensions of brand personality. *Journal of Marketing Research, 34*, 347-356.

Anderson, L. R., & McGuire, W. J. (1965). Prior reassurance of group consensus as a factor in producing resistance to persuasion. *Sociometry, 28*, 44-56.

Andreasen, N. C. (1997). Linking mind and brain in the study of mental illnesses: A project for a scientific psychopathology. *Science, 275*, 1586-1593.

Averill, J. R. (1975). A semantic atlas of emotional concepts. *JSAS Catalogue of Selected Documents in Psychology, 5*, 330.

Averill, J. R. (1982). *Anger and aggression: An essay on emotion*. New York: Springer.

Baines, P. R., Worcester, R. M., Jarrett, D., & Mortimore, R. (2005). Product attribute-based voter segmentation and resource advantage theory. *Journal of Marketing Management, 21*, 1079-1115.

Belk, R. W., Balm, K. D., & Mayer, R. N. (1982). Development recognition of consumption symbolism. *Journal of Consumer Research, 9*, 4-16.

Ben-Ur, J., & Newman, B. I. (2002). Motives, perceptions and voting intention of voters in the 2000 U.S. presidential election. *Psychology & Marketing, 19*, 1047-1065.

Berelson, B. (1966). Democratic theory and public opinion. In B. Berelson & M. Janowitz (Eds.), *Reader in public opinion and communication* (pp. 489-540). New York: Free Press.

Blumenthal, S. (1980). *The permanent campaign: Inside the world of elite political operatives*. Boston: Beacon.

Boster, F. J., & Mongeau, P. (1984). Fear-arousing persuasive messages. In R. N. Bostrom & B. H. Westley (Eds.), *Communication Yearbook* (Vol. 8, pp. 330-375). Newbury Park, Ca: Sage.

Bradley, M. M., Greenwald, M. K., & Hamm, A. O. (1993). Affective picture processing. In N.Birbaumer & A. Ohman (Eds.), *The structure of emotion: Psychophysiological, cognitive and clinical aspects*. Toronto: Hogrefe & Huber.

Brooker, G. (1981). A comparison of the persuasive effects of mild humor and mild fear appeals. *Journal of Advertising, 10*, 29-40.

Browne, M. W., & Cudeck, R. (1993). Alternative ways of assessing model fit. In K. A. Bollen & J. S. Long (Eds.), *Testing structural equation models* (pp. 136-162). Newbury Park, CA: Sage.

Bulter, P., & Collins, N. (1994). Political marketing: Structure and process. *European Journal of Marketing, 28*, 19-34.

Bush, L. E., II. (1973). Individual differences in multidimensional scaling of adjectives denoting feelings. *Journal of Personality and Social Psychology, 25*, 50-57.

Cacioppo, J. T., & Petty, R. E. (1989). The Elaboration Likelihood Model: The role of affect and affect-laden information processing in persuasion. In P. Cafferata & A. Tybout (Eds.), *Cognitive and Affective Responses to Advertising* (pp. 69-89). Lexington, MA: Lexington Books.

Campbell, A., Converse, P., Miller, W. E., & Stokes, D. E. (1960). *The American voter*. New York: John Wiley and Sons.

Campbell, A., Gurin, G., & Miller, W. E. (1954). *The voter decides*. Evanston, IL: Row, Peterson and Co.

Chaiken, S. (1980). Heuristic versus systematic information processing and the use of source versus message cues in persuasion. *Journal of Personality and Social Psychology, 39*, 752-766.

Chang, C. (2001). The impacts of emotion elicited by print political advertising on candidate evaluation. *Media Psychology, 3*, 91-119.

Christ, W. G., Thorson, E., & Caywood, C. (1994). Do attitudes toward political advertising affect information processing of televised political commercials? *Journal of Broadcasting & Electronic Media, 38*, 251-270.

Clark, M. S. (1982). A role for arousal in the link between feeling states, judgments, and behavior. In M. S. Clark & S. T. Fiske (Eds.). Hillsdale, NJ: Erlbaum.

Cohen, J., & Basu, K. (1987). Alternative models of categorization: Toward a contingent processing framework. *Journal of Consumer Research, 13*, 455-472.

Darke, P. R., Freedman, J. L., & Chaiken, S. (1995). Percentage discounts, initial price, and bargain hunting: A heuristic-systematic approach to price search behavior. *Journal of Applied Psychology, 80*, 580-586.

Davis, J., J. (1997). *Advertising Research: Theory and Practice*. Upper Saddle River, NJ.: Prentice Hall.

Decety, J., & Chaminade, T. (2003). Neural correlates of feeling sympathy. *Neuropsychologia, 41*, 127-138.

Deighton, J., Romer, D., & McQueen, J. (1989). Using drama to persuade. *Journal of Consumer Research, 16*, 335-343.

Dermody, J., & Scullion, R. (2001). An exploration of the advertising ambitions and strategies of the 2001 British General Election. *Journal of Marketing Management, 17*, 969-987.

Devlin, L. P. (1989). Contrasts in presidential campaign commercials of 1988. *American Behavioral Scientist, 32*, 389-414.

Devlin, L. P. (1993). Contrasts in presidential campaign commercials of 1992. *American Behavioral Scientist, 37*, 272-290.

Devlin, L. P. (1997). Contrast in presidential campaign commercials of 1996. *American Behavioral Scientist, 40*, 1058-1084.

Devlin, L. P. (2001). Contrast in presidential campaign commercials of 2000. *American Behavioral Scientist, 44*, 2338-2369.

Devlin, L. P. (2005). Contrasts in presidential campaign commercials of 2004. *American Behavioral Scientist, 49*, 279-313.

Duncan, C. P., & Nelson, J. E. (1985). Effects of humor in a radio advertising experiment. *Journal of Advertising, 14*, 33-40.

Duncan, T. (2002). *IMC: Using advertising and promotion to build brands*. New York: McGraw-Hill.

Edell, J. A., & Burke, M. C. (1987). The power of feelings in understanding advertising effects. *Journal of Consumer Research, 14*, 421-433.

Ekman, P., & Friesen, W. V. (1978). *Facial action coding system (FACS): A technique for the measurement of facial action*. Palo Alto, CA: Consulting Psychologists Press.

Embretson, S. E., & Reise, S. P. (2000). *Item response theory for psychologists*. Mahwah, NJ: Lawrence Erlbaum Associates.

Ewing, M. T., Salzberger, T., & Sinkovics, R. R. (2005). An alternate approach to assessing cross-cultural measurement equivalence in advertising research. *Journal of Advertising, 34*, 17-36.

Faber, R. J., Tims, A. R., & Schmitt, K. G. (1993). Negative political advertising and voting intent: The role of involvement and alternative information sources. *Journal of Advertising, 22*, 67-76.

Feldman, L. A., Barrett, L., & Russell, J. A. (1998). Independence and bipolarity in the structure of affect. *Journal of Personality and Social Psychology, 74*, 967-984.

Fishbein, M., & Ajzen, I. (1975). *Belief, attitude, intention and behavior: An introduction to theory and research.* Reading, MA: Addison-Wesley.

Fishbein, M., & Ajzen, I. (1980). Predicting and understanding consumer behavior: Attitude-behavior correspondence. In I. Ajzen & M. Fishbein (Eds.), *Understanding attitudes and predicting social behavior* (pp. 148-172). Eaglewood Cliffs, NJ: Prentice-Hall.

Fiske, S. T., & Taylor, S. E. (1984). *Social cognition*. New York: Random House.

Frijda, N. H. (1986). *The emotions*. New York: Cambridge University Press.

Geer, J. G., & Geer, J. H. (2003). Remembering attack ads: An experimental investigation of radio. *Political Behavior, 25*, 69-95.

Gelb, B. D., & Pickett, C. M. (1983). Attitude-toward-the-ad: Links to humor and to advertising effectiveness. *Journal of Advertising, 12*, 34-42.

Graber, D. A. (2004). Methodological developments in political communication research. In L. L. Kaid (Ed.), *Handbook of political communication research* (pp. 45-67). Mahwah, New Jersey: Lawrence Erlbaum Associates.

Greenwald, A. G. (1989). Why are attitudes important? In A. G. Greenwald (Ed.), *Attitude structure and function* (pp. 1-10). Hillsdale, New Jersey: Lawrence Erlbaum Associates.

Hair, J. F. J., Anderson, R. E., Tatham, R. L., & Black, W. C. (1995). *Multivariate data analysis*. Upper Saddle River, New Jersey: Prentice-Hall.

Hambleton, R. K., & Swaminathan, H. (1985). *Item response theory: Principles and applications*. Boston: Kluwer-Nijhoff.

Henneberg, S. C. (2004). The views of an advocatus dei: Political marketing and its critics. *Journal of Public Affairs, 4*, 225-243.

Hill, R. P. (1989). An exploration of voter responses to political advertisements. *Journal of Advertising, 18*, 14-22.

Hoyer, W. D., & Maclnnis, D. J. (2004). *Consumer behavior* (3rd ed.). Boston, MA: Houghton Mifflin.

Izard, C. E. (1977). The emotions in life and science. In C. E. Izard (Ed.), *Human emotions* (pp. 1-18). New York: Plenum Press.

Izard, C. E. (1992). Basic emotions, relations among emotions, and emotion-cognition relations. *Psychological Review, 99*, 561-565.

Izard, C. E. (1993). Four systems for emotion activation: Cognitive and non-cognitive processes. *Psychology Review, 100*, 68-90.

Izard, C. E., & Bartlett, E. S. (1972). *Patterns of emotions: A new analysis of anxiety and depression*. Oxford, England: Academic Press, 1972.

James, W. (1884). What is an emotion? *Mind, 9*, 188-205.

Johnson-Cartee, K. S., & Copeland, G. A. (1989). Southern voters' reaction to negative political ads in 1986 election. *Journalism and Mass Communication Quarterly, 66*, 888-893, 986.

Johnston, A., & Kaid, L. L. (2002). Image ads and issue ads in U.S. presidential advertising: Using videostyle to explore stylistic differences in televised political ads from 1952 to 2000. *Journal of Communication, 52*, 281-300.

Joreskog, K. G., & Sorbom, D. (2005). Lisrel 8.72. Lincolnwood, IL: Scientific Software International, Inc.

Joslyn, R. A. (1980). The content of political spot ads. *Journalism Quarterly, 57*, 92-98.

Kahn, K. F., & Geer, J. G. (1994). Creating impressions: An experimental investigation of political advertising on television. *Political Behavior, 16*, 93-116.

Kahn, K. F., & Kenney, P. J. (2000). How negative campaigning enhances knowledge of Senate elections. In J. A. Thurber, C. J. Nelson & D. A. Dulio (Eds.), *Crowded airwaves: Campaign advertising in elections* (pp. 65-95). Washtington, DC: Brooking Institution.

Kaid, L. L. (2001). Technodistortions and effects of the 2000 political advertising. *American Behavioral Scientist, 44*, 2370-2378.

Kaid, L. L. (2002). Videostyle and political advertising effects in the 2000 presidential campaign. In R. E. J. Denton (Ed.), *The 2000 presidential campaign: A communication perspective* (pp. 183-197). Westport, CT: Praeger.

Kaid, L. L. (2004). Political advertising. In L. L. Kaid (Ed.), *Handbook of political communication research* (pp. 155-202). Mahwah, NJ: Lawrence Erlbaum Associates.

Kaid, L. L. (2005). Videostyle in the 2004 political advertising. In R. E. J. Denton (Ed.), *The 2004 presidential campaign: A communication perspective* (pp. 283-299). Lanham, MD: Rowman & Littlefield.

Kaid, L. L., Chanslor, M., & Hovind, M. (1992). The influence of program and commercial type on political advertising effectiveness. *Journal of Broadcasting & Electronic Media, 36*, 303-320.

Kaid, L. L., & Johnston, A. (2001). *Videostyle in presidential campaigns: Style and content of televised political advertising*. Westport, CT: Praeger.

Kaid, L. L., & Postelnicu, M. (2005). Political advertising in the 2004 Election: Comparison of traditional television and Internet message. *American Behavioral Scientist, 49*, 265-278.

Kaid, L. L., & Sanders, K. R. (1978). Political television commercials: An experimental study of type and length. *Communication Research, 5*, 57-70.

Kaid, L. L., & Tecesco, J. C. (1999). Tracking voter reactions to television advertising. In L. L. Kaid & D. G. Bystrom (Eds.), *The electronic election: Perspectives on the 1996 campaign communication* (pp. 233-246). Mahwah, NJ: Lawrence Earlbaum.

King, L. R. (1965). The marketing concept. In G. Schwartz (Ed.), *Science in marketing*. New York: John Wiley and Sons.

Kitayama, S., Markus, H. R., Tummala, P., Kurokawa, M., & Kato, K. (1990). *Culture and self-cognition*.Unpublished manuscript.

Kotler, P. (1975). Overview of political candidate marketing. *Advances in Consumer Research, 2*, 761-769.

Lang, A. (1991). Emotion, formal features, and memory for televised political advertisements. In F. Biocca (Ed.), *Television and political advertising: Psychological processes* (Vol. 1, pp. 221-243). Hillsdale, New Jersey: Lawrence Erlbaum Associates.

Lang, P. J. (1980). Behavioral treatment and bio-behavioral assessment: Computer applications b. In J. B. Sidowski, J. H. Johnson & T. A. Williams (Eds.), *Technology in mental health care delivery systems* (pp. 119-137). Norwood, NJ: Ablex.

Larsen, R. J., & Diener, E. (1992). Promises and problems with the circumplex model of emotion. In M. S. Clark (Ed.), *Review of personality and social psychology: Emotion* (Vol. 13, pp. 25-59).

Laskey, H. A., Day, E., & Crask, M. R. (1989). Typology of main message strategies for television commercials. *Journal of Advertising, 18*, 36-41.

Lavidge, R. J., & Steiner, G. A. (1961). A model for predictive measurements of advertising effectiveness. *Journal of Marketing, 25*, 59-62.

Lazarus, R. S. (1966). *Psychological stress and the coping process*. New York: McGraw-Hill.

Lazarus, R. S. (1984). On the primacy of cognition. *American Psychologist, 39*, 124-129.

Lazarus, R. S. (1991a). *Emotion and adaptation*. New York: Oxford University Press.

Lazarus, R. S. (1991b). Progress on a cognitive-motivational-relational theory of emotion. *American Psychologist, 46*, 819-834.

LeDoux, J. E. (1995). Emotion: Clues from the brain. *Annual Review of Psychology, 46*, 209-235.

LeDoux, J. E., Iwata, J., Cicchetti, P., & Reis, D. J. (1988). Different projections of the central amygdaloid nucleus mediate autonomic and behavioral correlates of conditioned fear. *Journal of Neuroscience, 8*, 2517-2529.

LeDoux, J. E., Romanski, L., & Xagoraris, A. (1989). Indelibility of subcortical emotional memories. *Journal of Cognitive Neuroscience, 1*, 238-243.

Linden, W. J. v. d., & Hambleton, R. K. (1996). *Handbook of moderen item response theory*. New York: Springer-Verlag.

Lock, A., & Harris, P. (1996). Political marketing - vive la difference! *European Journal of Marketing, 30*, 21-31.

Maarek, P. J. (1995). *Political marketing and communication*. London: John Libby.

MacInnis, D. J., & de Mello, G. E. (2005). The concept of hope and its relevance to product evaluation and choice. *Journal of Marketing, 69*, 1-14.

Mackay, C. J. (1980). The measurement of mood and psychophysiological activity using self-report techniques. In I. Marting & P. Venebles (Eds.), *Techniques in psychophysiology* (pp. 501-562). New York: Wiley.

Mandler, G. (1962). Emotion. In R. Brown, E. Galanter, E. Hess & G. Mandler (Eds.), *New directions in psychology* (pp. 267-339). New York: Holt, Rinehart & Winston.

Mandler, G. (1984). *Mind and body*. New York: Norton.

Mano, H. (1997). Affect and persuasion: The influence of pleasantness and arousal on attitude formation and message elaboration. *Psychology and Marketing, 14*, 315-335.

Marshall, S. W. (2006). *Advertising message strategies and executional devices in television commercials from award-winning "effective" campaigns from 1999 to 2004*.Unpublished manuscript, University of Florida, Gainesville, Florida.

Martinelli, K. A., & Chaffee, S. H. (1995). Measuring new-voter learning via three channels of political information. *Journalism and Mass Communication Quarterly, 72*, 18-32.

McGuire, W. J. (1989). Why are attitudes important? In A. R. Pratkanis, S. J. Breckler & A. G. Greenwald (Eds.), *Attitude structure and function* (pp. 37-69). Hillsdale, New Jersey: Lawrence Erlbaum Associates.

Mehrabian, A. (1977). A questionnaire measure of individual differences in stimulus screening and associated differences in arousability. *Environmental Psychology and Nonverbal Behavior, 1*, 89-103.

Mehrabian, A. (1995). Framework for a comprehensive description and measurement of emotional states. *Genetic, Social, and General Psychology Monographs, 121*, 339-361.

Mehrabian, A., & Russell, J. A. (1974). *An approach to environmental psychology b*. Cambridge, MA: Oelgesschlager, Gunn. and Hain.

Menon, M. K., Goodnight, J. M., & Wayne, R. J. (2006). Assessing advertising content in a hospital advertising campaign: An application of Puto and Wells (1984) measure of informational and transformational advertising content. *Journal of Hospital Marketing & Public Relations, 17*, 21-44.

Merritt, S. (1984). Negative political advertising: Some empirical findings. *Journal of Advertising, 13*, 27-38.

Mewborn, R. C., & Rogers, R. W. (1979). Effects of threatening and reassuring components of fear appeals and the physiological and verbal measures of emotions and attitudes. *Journal of Experimental and Social Psychology, 15*, 242-253.

Mitchell, R. L. C., Elliott, R., Barry, M., Cruttenden, A., & Woodruff, P. W. R. (2003). The neural response to emotional prosody, as revealed by functional magnetic resonance imaging. *Neuropsychologia, 41*, 1410-1421.

Mittal, B. (1999). The advertising of service: Meeting the challenge of intangibility. *Journal of Service Research, 2*, 98-116.

Morris, J. D. (1995). Observations: SAM: The Self-Assessment Manikin: An efficient cross-cultural measurement of emotional response. *Journal of Advertising Research, 35*, 63-68.

Morris, J. D., Bradley, M. M., Sutherland, J., & Wei, L. (1993). *Assessing cross cultural transferability of standardized global advertising: An emotional response approach.* Paper presented at the Annual Conference of the Association of Education in Journalism and Mass Communications, Kansas City.

Morris, J. D., Bradley, M. M., Waine, C. A., & Lang, J. B. (1992). *Assessing affective reactions to advertisements with the self-assessment manikin (SAM).* Paper presented at the Southern Marketing Association Conference.

Morris, J. D., Klahr, N. J., Shen, F., Villegas, J., Wright, P., He, A. G., et al. (2008). fMRI for emotional responses to TV commercials: A dimensional approach for locating emotion processors in human brain. *Human Brain Mapping*.

Morris, J. D., Roberts, M. S., & Baker, G. F. (1998). The effects of music on emotional response, brand attitude, and purchase intent in an emotional advertising condition. In J. W. Alba & J. W. Hutchinson (Eds.), *Advances in consumer research* (Vol. 25, pp. 518-526). Provo, UT: Association for Consumer Research.

Morris, J. D., Strausbaugh, K. L., & Nthangeni, M. (1996). Emotional response to advertisements (or commercials) across culture. In G. B. Wilcox (Ed.), *Proceedings of the 1996 Conference of the American Academy of Advertising* (pp. 47-54). Austin, TX: American Academy of Advertising.

Morris, J. D., & Waine, C. A. (1993). Managing the creative effort: Pre- production and post-production measures of emotional responses. In E. Thorson (Ed.), *Proceedings of the 1993 Conference of the American Academy of Advertising* (pp. 158-176). Columbia, MO.

Morris, J. D., Waine, C. A., & Lang, J. B. (1993). Assessing emotional responses to advertisements with (SAM) the self-assessment manikin. In *Proceedings of the Allied Southern Business Association 1993 Annual Meeting*: Allied Southern Business Association.

Morris, J. D., Woo, C., Geason, J. A., & Kim, J. (2002). The power of affect: Predicting intention. *Journal of Advertising Research, 42*, 7-17.

Morris, J. D., Woo, C., & Singh, A. J. (2005). Elaboration likelihood model: A missing intrinsic emotional implication. *Journal of Targeting, Measurement & Analysis for Marketing, 14*, 79-98.

Natchez, P. B., & Bupp, I. C. (1968). Candidates, issues, and voters. *Public Policy, 17*, 409-437.

Newhagen, J. E., & Reeves, B. (1991). Emotion and memory responses for negative political advertising: A study of television commercials used in the 1988 presidential election. In F. Biocca (Ed.), *Television and political advertising: Psychological processes* (Vol. 1, pp. 197-220). Hillsdale, New Jersey: Lawrence Erlbaum Associates.

Newman, B. I. (2001). An assessment of the 2000 US presidential election: A set of political marketing guidelines. *Journal of Public Affairs, 1*, 210-216.

Niffenegger, P. B. (1989). Strategies for success from the politcal marketers. *Journal of Consumer Marketing, 6*, 45-51.

Nimmo, D. (1999). The permanent campaign: Marketing as a governing tool. In B. I. Newman (Ed.), *Handbook of political marketing* (pp. 73-86). Thousand Oaks, CA: Sage.

O'Cass, A. (1996). Political marketing and the marketing concept. *European Journal of Marketing, 30*, 45-61.

Oishi, S. (2006). The concept of life satisfaction across cultures: An IRT analysis. *Journal of Research in Personality, 40*, 347-462.

O'Keefe, M. T., & Sheinkopf, K. G. (1974). The voter decides: Candidate image or campaign issue. *Journal of Broadcasting, 18*, 403-412.

Omura, G. S. (1979). Role of attribute generality in cognitions of political candidates. *Advances in Consumer Research, 6*, 635-640.

Ortony, A., & Turner, T. J. (1990). What's basic about basic emotions? *Psychological Review, 97*, 315-331.

Osgood, C. E., Suci, G. J., & Tannenbaum, P. H. (1957). *The measurement of meaning*. Urbana, IL: University of Illinois Press.

Panksepp, J. (1989). The neurobiology of emotions. In T. Manstead & H. Wagner (Eds.), *Handbook of social psychophysiology* (pp. 5-26). New York: Wiley.

Petty, R. E., & Cacioppo, J. T. (1986). The elaboration likelihood model of persuasion. In L. Berkowitz (Ed.), *Advances in experimental social psychology* (Vol. 19, pp. 123-205). New York: Academic Press.

Petty, R. E., Cacioppo, J. T., & Goldman, R. (1981). Personal involvement as a determinant of argument-based persuasion. *Journal of Personality and Social Psychology, 41*, 847-855.

Plutchik, R. (1980). A general psychoevolutionary theory of emotion. In R. Plutchik & H. Kellerman (Eds.), *Emotion:Theory, research, and experience* (Vol. 1, pp. 3-33). New York: Academic.

Plutchik, R. (1982). A psycho evolutionary theory of emotions. *Social Science Information, 21*, 529-553.

Plutchik, R. (1984). Emotions: A general psychoevolutionary theory b. In K. R. Scherer & P. Ekman (Eds.), *Approaches to emotion* (pp. 197-219). Hillsdale, NJ: Lawrence Erlbaum Associates.

Porter, M. E. (1985). *Competitive advantage*. New York: The Free Press.

Puto, C. P., & Wells, W. D. (1984). Informational and transformational advertisng: The differential effects of time. *Advances in Consumer Research, 11*, 638-643.

Quinn, P., & Kivijarv, L. (2005). US political media buying 2004. *International Journal of Advertising, 24*, 131-140.

Resnik, A., & Stern, B. L. (1977). An analysis of information content in television advertising. *Journal of Marketing, 41*, 50-53.

Richins, M. L. (1997). Measuring emotions in consumption experience. *Journal of Consumer Research, 24*, 127-146.

Ridout, T. N., Shah, D. V., Goldstein, K. M., & Franz, M. M. (2004). Evaluating measures of campaign advertising exposure on political learning. *Political Behavior, 26*, 201-225.

Roddy, B. L., & Garramone, G. M. (1988). Appeals and strategies of negative political advertising. *Journal of Broadcasting & Electronic Media, 32*, 415-427.

Rogers, E. M. (1997). *A history of communication study: A biographical approach*. New York: Free Press.

Roseman, I. J. (1984). Cognitive determinants of emotion : A structural theory. *Review of Personality and Social Psychology, 5*, 11-36.

Roseman, I. J., Antoniou, A. A., & Jose, P. E. (1996). Appraisal determinants of emotions: Constructing a more accurate and comprehensive theory. *Cognition & Emotion, 10*, 241-277.

Russell, J. A. (1978). Evidence of convergent validity on the dimension of affect. *Journal of Personality and Social Psychology, 36*, 1152-1168.

Russell, J. A. (1980). A circumplex model of affect. *Journal of Personality and Social Psychology, 42*, 1161-1178.

Russell, J. A., & Mehrabian, A. (1977). Evidence for a three-factor theory of emotions. *Journal of Research in Personality, 11*, 273-294.

Samejima, F. (1969). Estimation of latent ability using a response pattern of graded scores. *Psychometrika Monograph, 17*, 1-100.

Scherer, K. R., & Wallbott, H. G. (1994). Evidence for universality and cultural variation of differential emotion response patterning. *Journal of Personality and Social Psychology, 66*, 310-328.

Schiffman, L. G., Sherman, E., & Kirpalani, N. (2002). Trusing souls: A segmentation of the voting public. *Psychology & Marketing, 19*, 993-1007.

Schleuder, J. (1990). Effects of commercial complexity, the candidate, and issue vs. image strategies in political ads. *Advances in Consumer Research, 17*, 159-168.

Schlinger, M. J. (1979). A profile of responses to commercials. *Journal of Advertising Research, 19*, 37-46.

Schlosberg, H. (1952). The description of facial expression in terms of two dimensions. *Journal of Experimental Psychology, 44*, 229-237.

Shama, A. (1975). Applications of marketing concepts to candidate marketing. *Advances in Consumer Research, 2*, 793-801.

Shama, A. (1976). The marketing of political candidates. *Journal of the Academy of Marketing Science, 4*, 764-777.

Shapiro, M. A., & Rieger, R. H. (1992). Comparing positive and negative political advertising on radio. *Journalism Quarterly, 69*, 135-145.

Shaver, P., Schwartz, J., Kirson, D., & O' Connor, C. (1987). Emotion knowledge: Further exploration of a prototype approach. *Journal of Personality and Social Psychology, 52*, 1061-1086.

Shen, F. (2007). *Measuring issue and image in political advertising: An informational/transformational approach.* Paper presented at the Annual Convention of Association for Education in Journalism and Mass Communication, Washintgton, D. C.

Shen, F., & Kim, K. (2006). *Videostyle in Presidential Campaigns 2000 & 2004: An informational versus transformational approach.* Paper presented at the Association for Education in Journalism and Mass Communication, San Francisco, California.

Simon, H. A. (1982). Comments. In M. S. Clarke & S. T. Fiske (Eds.), *Affect and cognition: The seventeenth annual Carnegie symposium on cognition* (pp. 333-342). Hillsdale, NJ: Erlbaum.

Singh, J. (2004). Tackling measurement problems with Item Response Theory: Principles, characteristics, and assessment, with an illustrative example. *Journal of Business Research, 57*, 184-208.

Singh, J., Howell, R. D., & Rhoads, G. K. (1990). Adaptive designs for Likert-type data: An approach for implementing marketing surveys. *Journal of Marketing Research, 27*, 304-321.

Sonner, B. S. (1998). The effectiveness of negative political advertising: A case study. *Journal of Advertising Research, 38*, 37-42.

Swaminathan, V., Zinkhan, G. M., & Reddy, S. K. (1996). The evolution and antecedents of transformational adverrtising: A conceptual model. *Advances in Consumer Research, 23*, 49-55.

Teasdale, J. D. (1993). Emotion and two kinds of meaning: Cognitive therapy and applied cognitive science. *Behavior Research Theory, 31*, 339-354.

Teasdale, J. D., & Barnard, P. J. (1993). *Affect, cognition, and change: Remodelling depressive thought*. Hove, England: Lawrence Erlbaum Associates.

Teasdale, J. D., Howard, R. J., Cox, S. G., Ha, Y., Brammer, M. J., Williams, S. C. R., et al. (1999). Functional MRI study of the cognitive generation of affect. *American Journal of Psychology, 156*, 209-215.

Thorson, E., Christ, W. G., & Caywood, C. (1991). Effects of issue-image strategies, attack and support appeals, music, and visual content in political commercials. *Journal of Broadcasting & Electronic Media, 35*, 465-486.

Thorson, E., Reeves, B., & Schleuder, J. (1985). Message complexity and attention to television. *Communication Research, 12*, 427-454.

Thorson, E., Reeves, B., & Schleuder, J. (1987). Attention to local and global complexity in television messages. In M. McLaughlin (Ed.), *Communication Yearbook 10*. Beverly Hills, CA: Sage.

Tomkins, S. S. (1980). Affect as amplification: Some modifications in theory. In R. Plutchik & H. Kellerman (Eds.), *Emotion: Theory, research and experience* (pp. 141-164). New York: Academic Press.

Vakratsas, D., & Ambler, T. (1999). How advertising works: What do we really know? *Journal of Marketing, 63*, 26-43.

Vavreck, L. (2001). The reasoning voter meets the strategic candidate: Signals and specificity in campaign advertising, 1998. *American Politics Research, 29*, 507-529.

Watson, D., & Tellegen, A. (1985). Toward a consensual structure of mood. *Psychological Bulletin, 98*, 219-235.

Watson, D., Wiese, D., Vaidya, J., & Tellegen, A. (1999). The two general activation systems of affect: Structural findings, evolutinory considerations, and psychological evidence. *Journal of Personality and Social Psychology, 76*, 820-838.

Weaver-Lariscy, R. A., & Tinkham, S. F. (1996). Advertising message strategies in U.S. congressional campaigns: 1982, 1990. *Journal of Current Issues and Research in Advertising, 18*, 53-66.

Weiner, B. (1985). An attributional theory of achievement motivation and emotion. *Psychological Review, 92*, 548-573.

Wells, W. D. (1988). Lectures and dramas. In P. Cafferata & A. Tybout (Eds.), *Cognitive and affective responses to advertising* (pp. 13-20). Lexington, MA: D. C. Heath.

West, D. M. (1993). *Air wars: Television advertising in election campaigns, 1952-1992*. Washington, DC: Congressional Quarterly.

West, D. M. (1994). Political advertising and news coverage in the 1992 California U.S. Senate campaigns. *The Journal of Politics, 56*, 1053-1075.

Witte, K. (1995). Generating effective risk messages: How scary should your risk communication be? In B. R. Burleson (Ed.), *Communication Yearbook* (Vol. 18, pp. 229-254). Thousand Oaks, CA: Sage.

Wring, D. (1997). Reconciling marketing with political science: Theories of political marketing. *Journal of Marketing Management, 13*, 651-663.

Yoon, K., Pinkleton, B., & Ko, W. (2005). Effects of negative political advertising on voting intention: An exploration of the roles of involvement and source credibility in the development of voter cynicism. *Journal of Marketing Communications, 11*, 95-112.

Zajonc, R. B. (1984a). The interaction of affect and cognition. In K. R. Scherer & P. Ekman (Eds.), *Approaches to emotion* (pp. 239-246). Hillsdale, NJ: Lawrence Erlbaum.

Zajonc, R. B. (1984b). On the primacy of affect. *American Psychologist, 39*, 117-123.

Zeithaml, V. A., & Bitner, M. J. (1996). *Service marketing*. New York: McGraw-Hill.

BIOGRAPHICAL SKETCH

Feng Shen was born in China. He received his Bachelor of Arts degree in english at Shanghai International Studies University (Shanghai, China) in 1995. After five years of industry experience with public health and marketing campaigns in China, he came to the United States and completed a Master of Science degree in communication at Cornell University, Ithaca, New York in 2002. After spending one year in China managing international investment, he joined the Ph.D. program at the University of Florida, Gainesville, Florida in 2005. He has been collaborating primarily with Dr. Jon Morris on several research projects. In 2006 and 2007, he taught Advertising Research at the University of Florida. He has now accepted a position as an Assistant Professor of Marketing at Erivan K. Haub School of Business, Saint Joseph's University, Philadelphia, Pennsylvania.