EVALUATION OF HEAT RECOVERY DEVICES WITH CARBON DIOXIDE VENTILATION CONTROLS

By

PATRICK WILLIAM JOHNS

A THESIS PRESENTED TO THE GRADUATE SCHOOL OF THE UNIVERSITY OF FLORIDA IN PARTIAL FULFILLMENT OF THE REQUIREMENTS FOR THE DEGREE OF MASTER OF SCIENCE

UNIVERSITY OF FLORIDA

2003

ACKNOWLEDGMENTS

As my advisor, Dr. Herbert Ingley has helped me follow an organized path in the completion of my Master of Science degree. I would like to thank him for his time and guidance that he has given me. Dr. Ingley provides generous amounts of time to all his students and I am appreciative that I was able to act as his graduate student. I thank Dr. Yogi Goswami and Dr. Sherif Sherif for serving as my committee members and the time they have provided.

My greatest appreciation is to my family and friends who have supported me with my education and so much more. I also acknowledge the funding that Florida Power & Light Company has provided for this research. Finally, I acknowledge Larry Nelson for all the support he has given.

TABLE OF CONTENTS

APPENDIX

LIST OF TABLES

LIST OF FIGURES

NOMENCLATURE

AHU	air handling unit
CAV	constant air volume
CO_2	carbon dioxide
DCV	demand control ventilation
DDC	direct digital control
FTU	fan terminal unit
HAP	hourly analysis program
HRD	heat recovery device
HVAC	heating, ventilation, and air conditioning
Q	airflow rate [cfm]
T	dry-bulb temperature [°F]
TMY	typical meteorological year
T(°R)	temperature [°R]
VAV	variable air volume
W	humidity ratio
h	enthalpy [Btu/lb_{da}]
hr	hour
min	minute
p	pressure [psia]

yr	year

Greek

μ	degree of saturation
ϕ	relative humidity [%]
ν	specific volume [ft^3/lb_{da}]
ρ	density [lb/ft^3]
η	efficiency

subscripts

EA	exhaust air
OA	outdoor air
OA_Supply	outdoor air supply
R	room air
air	based on air
d	dew point
da	dry air
fan	based on fan
motor	based on motor
s	saturated
static	based on static (pertaining to static pressure)
w	partial based on water vapor
ws	saturation vapor

superscripts

*	based on wet-bulb

Abstract of Thesis Presented to the Graduate School
of the University of Florida in Partial Fulfillment of the
Requirements for the Degree of Master of Science
EVALUATION OF HEAT RECOVERY DEVICES WITH
CARBON DIOXIDE VENTILATION CONTROLS

By

Patrick William Johns

August 2003

Chair: H. A. Ingley
Major Department: Mechanical and Aerospace Engineering

The purpose of this study was to determine the cost effectiveness of combining the use of heat recovery devices with carbon dioxide ventilation controls. The cost effectiveness of using these systems together was compared with the effectiveness of operating each system separately. This study modeled a commercial office building with current software to simulate annual energy costs for five different Florida cities.

Each scenario was applied to the model to determine the reduction of annual energy cost. A spreadsheet was also used to model each heat recovery device to compensate for deficiencies in the commercial computer software also used for this study. The software did not produce savings due to reductions in the heating load. This was partially due to the inability to schedule chiller operation.

The actual operating schedule for the case-study building did not promote significant energy reduction associated with carbon dioxide controls. This operating schedule was changed to allow chiller operation during the evening hours. This change

in building operation created a different reference case for the heat recovery and carbon dioxide control savings. The heat recovery devices were modeled with the original reference case that did not involve evening operation. The carbon dioxide controls were modeled against a different reference that did allow the evening operation. Each of these reference cases produced different annual energy costs, which resulted in the remodeling of the heat recovery devices. The heat recovery devices were remodeled with evening operation so that an estimate of savings due to operating both systems could be determined.

It was concluded that the heat recovery devices with enthalpy exchange are cost effective for several areas in Florida and could possibly be considered for others. The carbon dioxide control was also determined to be effective for some areas. The combination of using both these systems was not found to be cost effective for Florida cities with the modeling technique that this research used. It has been recommended that additional research be conducted for a more accurate modeling of simultaneous use of both systems.

CHAPTER 1
BACKGROUND

This chapter provides the technical background supporting the thesis on heat recovery devices and carbon dioxide controls as tools for saving energy. Previous work described in the literature on heat recovery devices, carbon dioxide controls, and energy analysis software has been reviewed and provides a benchmark for the current research. This literature review resulted in the development of the research objectives that are addressed within this report.

Heat Recovery Devices

Heat recovery devices have demonstrated their capability of reducing energy cost by the preconditioning of ventilation air. These devices are categorized as sensible or enthalpy heat exchangers (Crowther, 2001). The ventilation air exchanges heat with the exhaust air from the building to reduce or raise, depending on whether the season is summer or winter, its temperature and/or the enthalpy. The rates of ventilation airflows are generally based on the requirements of ASHRAE Standard 62-2001, *Ventilation for Acceptable Indoor Air Quality* (Wellford, Aug. 2002). Some common sensible devices are plate exchangers, heat-pipes, and sensible wheels. Typical enthalpy exchangers are enthalpy wheels and permeable-membrane plates.

A heat recovery device (HRD) can be an important addition to the heating, ventilation and air conditioning (HVAC) system of a building because 30% or more of the cooling or heating load can be attributed to ventilation (Crowther, 2001). By reducing the load due to ventilation great amounts of energy can be saved. Each HRD

has its own advantages and disadvantages that must be considered when designing an HVAC system. According to an article in *HPAC Engineering*, heat recovery devices (specifically enthalpy wheels) should be selected by assessing the tradeoff between energy effectiveness, pressure drop, and first cost (Wellford, Aug. 2002). This can be stated for all HRDs with additional selection criteria including maintenance, additional moving parts, and size.

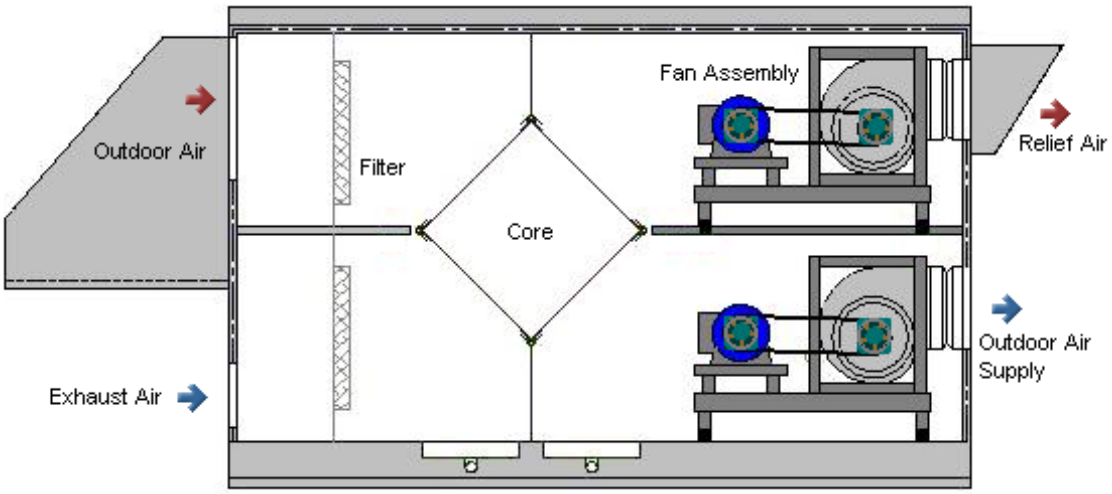

Figure 1-1. Plate/membrane HRD labeled diagram (permission of use from Florida Power & Light Company).

The plate and permeable-membrane are two types of cross-flow HRDs. These two devices require no moving parts, are easy to clean and install, but will require a large mechanical space (Crowther, 2001). The permeable-membrane uses adsorption and convection to remove heat and water from the warmer and more humid air stream (Zhang et al., 2000). Desorption and convection adds heat and mass into the cooler dryer air stream. For membrane type heat exchangers the vapor pressure is normally the driving force for moisture transfer. During cooling, the vapor pressure of the ventilation air would be greater than the exhaust air and would cause the water molecules to pass through the membrane. Membranes can consist of many milli-pores that only allow the

water molecules to pass thru and can stop others, such as the ammonia molecule. The plate exchanger does not use water diffusion, which is why this is a sensible only device. The cross flow exchangers tend to have small pressure drops with thermal effectiveness values ranging from 50 to 80% and up to 85% for the permeable-membranes. A diagram of an HRD is shown in Figure 1-1. This type of HRD can use a plate or permeable-membrane, which slides into the core. Figure 1-1 also labels the airstreams and their direction of flow. The core is the actual plate or membrane used. The inside of an HRD is shown in Figure 1-2 and the core is the main aspect of this image.

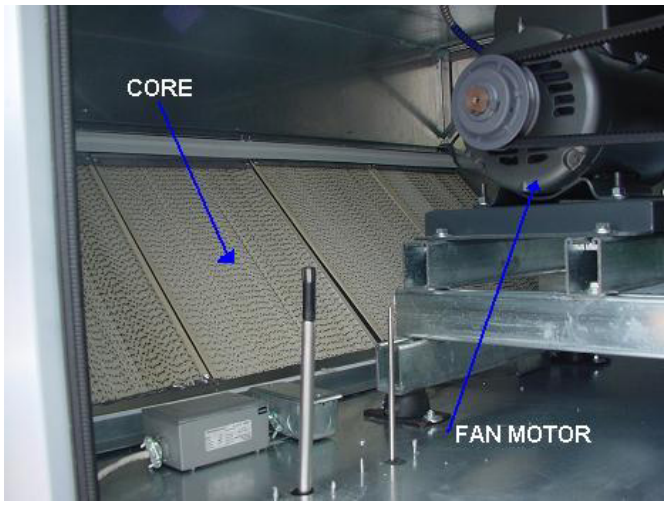

Figure 1-2. Image of an HRD core and fan motor on the inside of the unit.

Heat-pipe heat exchangers use an intermediate fluid to exchange heat between building exhaust air and ventilation air. The heat-pipe device does not occupy much space, but this is a sensible only device (Crowther, 2001). Figure 1-2 illustrates the heat and mass transfer that occurs in a heat pipe (heat pipe figures used with the permission of Heat Pipe Technology). The intermediate fluid will vaporize in the pipe when the hotter air passes over the pipe (Mathur, 2000). This is shown in Figure 1-3 as the liquid (A) boils and becomes a vapor (B). The intermediate fluid then condenses on the cold-air

side of the pipe to heat the air. At point C in the heat pipe diagram the heat is released to the cold air stream (C) and becomes a liquid that moves by gravity (D) to the liquid pool.

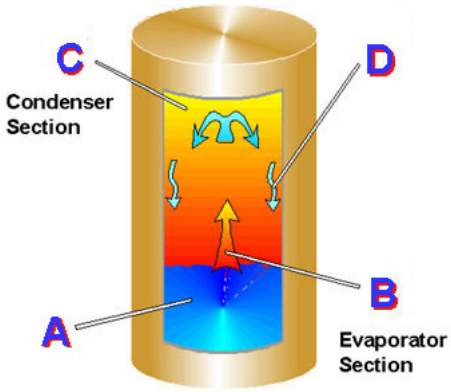

Figure 1-3. Heat and mass transfer occurring in a heat pipe (permission of use from Heat Pipe Technology).

Heat pipes are becoming more advanced. Heat Pipe Technology has implemented an air bypass damper for the outdoor air to flow through for situations of moderate outdoor temperatures. This is done because at these moderate temperatures there is no savings from passing the air across the heat pipe. A good visual of this design is shown in Figure 1-4. This figure illustrates winter operation and the arrangement of the bypass damper. Thermal effectiveness values up to 50% have been recorded for the heat-pipe HRD's (Shao et al., 1998). However, other reports state that the effectiveness can reach 70% (Mahon et al., 1983).

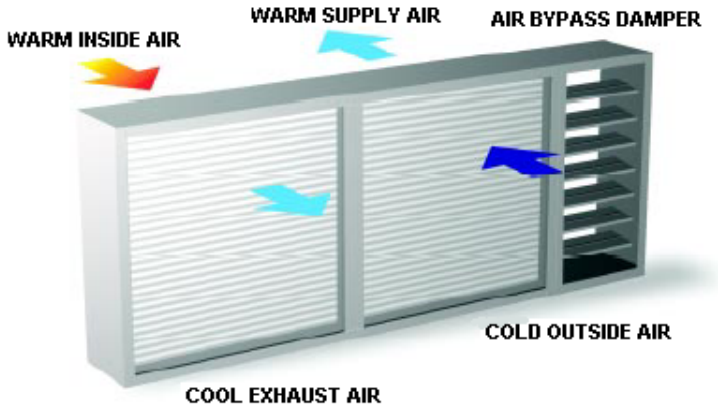

Figure 1-4. Heat pipe with air bypass damper arrangement.

The sensible and enthalpy wheels do just as their names imply by exchanging sensible or sensible and latent heat, respectively. The wheels do not affect air handling unit (AHU) cabinet length significantly and have low pressure drops, but require moving parts. Cross-contamination is also an issue with these wheels (Crowther, 2001). The wheels tend to use the same type of heat transfer mechanisms as the cross-flow HRDs. However, the wheels rotate between the building exhaust air and ventilation air. Due to the possibility of cross-contamination, the wheels are not used when there may be toxins or fumes in the building exhaust air. If ventilation air contamination is an issue then a cross-flow HRD is a better choice. The sensible wheels have effectiveness values ranging from 50 to 80% and up to 85% for the enthalpy wheels (Crowther, 2001). A diagram of a heat wheel is shown in Figure 1-5.

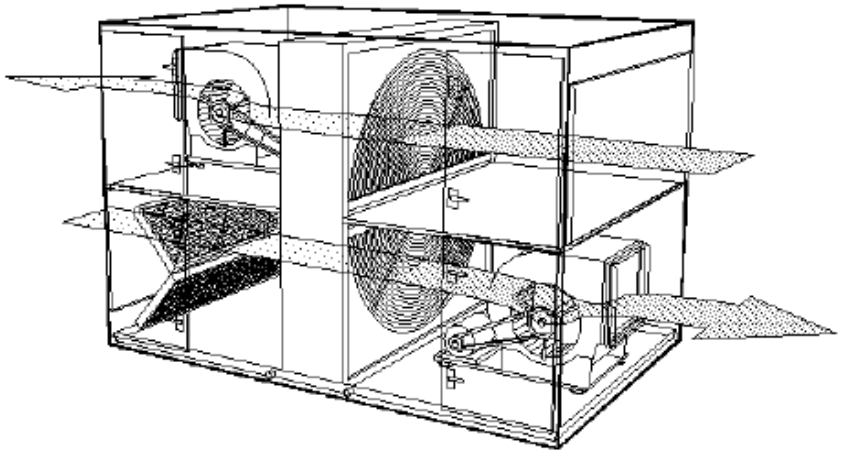

Figure 1-5. Heat wheel diagram illustrating airflows (permission of use from Xetex, Inc.).

Wheels, plates and membranes tend to be placed in similar looking units. The heat pipe is generally smaller. Figure 1-6 is a labeled photo of what a unit could look like with the duct attached. This image has been used with permission by Florida Power &

Light Company. The photo provides a good visual of the outdoor air hood that keeps debris and any other foreign objects from entering the unit.

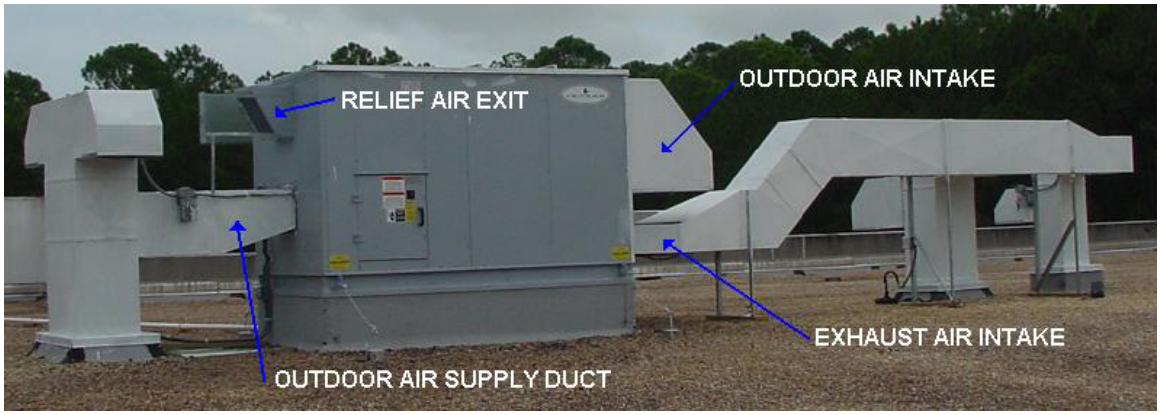

Figure 1-6. Diagram of an actual heat recovery unit assembly with labeled airflows.

The maintenance for a HRD is dependent on construction and the methods of heat transfer that are incorporated. It is very important to keep a schedule for maintenance on the HRD so that it operates at the optimum efficiency. Common tasks are to replace filters, clean the device with a manufacturer's suggested cleaner, check moving parts, and other tasks required by the manufacturer (Wellford, Oct. 2002).

Carbon Dioxide and Demand Control Ventilation

ASHRAE Standard 62-2001 states that if ventilation air holds indoor spaces to CO_2 concentrations below 700 ppm above outdoor air concentrations then the space should be properly ventilated (ANSI/ASHRAE, 2001). This specification results in 15-25 cfm/person (8-13 L/s·person) of ventilation needed for physical activities in the 1-2 met units. A met is the unit of measure for the metabolic rate a sedentary person. One met is equal to 18.4 Btu/h·ft^2 (50kcal/h·m^2). Common practice is to use 20 cfm/person of ventilation air to satisfy ASHRAE Std. 62. The ventilation air will then be a constant flow for each space even when there may not be any occupants. This ventilation load on

the cooling coil results in wasted energy and is why a new system has been recently devised, demand control ventilation (DCV) with CO_2 monitoring.

DCV monitors the amount of CO_2 in the space and controls the amount of ventilation per person in real-time (Schell, 2001). The measurement of the CO_2 is generally accomplished with infrared sensors. The CO_2 absorbs light at a specific wavelength and a sensor relates the light intensity to the CO_2 concentration (Schell, 2001). The sensors can be placed within the space or within the return air from that particular space.

The CO_2 sensors require frequent calibration with calibration periods occurring approximately every six months. However, some CO_2 products may require recalibration every three months. The calibration periods seem to be functions of the particular sensor and manufacturer. Self-calibrating sensors have also been discussed as an option. These sensors will recalibrate in the evening when all occupants are gone and the only contribution of CO_2 is due to the outdoor reference concentration (Schell, 2001). A problem with this method of calibration is that the ventilation system would have to be run in the evening, which is normally when the system is turned off to save on energy. However, the sequence of operation could be defined to only run the system long enough to recalibrate.

Sensors can be placed on a wall in the space or the return air duct. A wall-mounted sensor may look something like Figure 1-7. This sensor has digital display that provides the parts per million (ppm) of CO_2, but there are cheaper models that do not have displays. Figure 1-8 displays a sensor that probes a duct to take measurements. Placement of the sensor in the duct returns an average CO_2 concentration of all the zones

as opposed to wall placement, which have more control over specific space ventilation (Schell, 2001). Schell also makes note to not place these sensors near doors, windows, air registers, or any place a person would most likely stand. Carbon dioxide control can be very simple. The strategy of using a sensor in the return duct simply enables a control over total ventilation air by modulating this air quantity based on an average CO_2 value. The control becomes more complicated when integrated with variable air volume (VAV) control.

Figure 1-7. Wall-mountable CO_2 sensor (permission of use from AirTest).

Figure 1-8. Duct-mountable CO_2 sensor illustration showing the probe (permission of use from AirTest).

The CO_2 and thermostat must work together to provide enough ventilation and maintain the space at a comfortable temperature. Consider this example to better understand how CO_2 control and a thermostat would work. A room may contain a few

people with no windows or the blinds being closed. There may not be much heat from the occupants and the window load could be low enough that the thermostat would be satisfied. The VAV box would want to close because the room does not need as much air to condition the space. However, the CO_2 sensors would notice that the room was occupied and would minimize the VAV box turndown. The controls would make sure the VAV box would still provide enough ventilation for the occupancy. This may result in some reheating of the air. Reheat is an energy cost but will be required to provide the proper ventilation to the space.

Energy Analysis Software

The energy analysis software used to model the office building is Carrier's Hourly Analysis Program (HAP) version 4.10b. Spreadsheets are used in conjunction with the model calculating the savings from each HRD and a simple payback. A brief background follows for a better understanding of the methodologies regarding these two computer programs.

Carrier HAP

In the HVAC industry, engineers use computer software to model buildings. These models are created so that the building load can be calculated. This load data are then used to size the HVAC equipment. HAP is used to calculate the load for commercial buildings (Carrier Corporation, 2002). For these load calculations, HAP uses a transfer function method, one of the methods ASHRAE recognizes for load calculation. Not only does Carrier's HAP estimate the load and provide data for design equipment but it also simulates the energy use and cost for the modeled building. This software is very comprehensive because it simulates the building for every hour of the year.

The design of the equipment consists of using the cooling and heating loads to determine airflow, coil, fan, and chiller sizes (Carrier Corporation, 2002). The hour-by-hour energy simulations are run for both HVAC and non-HVAC systems. HAP simulates the HVAC systems with Typical Meteorological Year (TMY) data to estimate the energy cost of the building. These data are produced for the most typical months using long-term weather observations. The cost of this energy determined from the simulated data is determined by applying utility local rates. The engineer's modeling of a building becomes a great aid in the design of HVAC systems and can be easily changed for many building scenarios. More information about Carrier's HAP can be found in the next chapter.

Savings Spreadsheets

This section is a brief discussion of the spreadsheets used for savings calculations. More detail is provided within the methodologies in the next chapter. The spreadsheets model the annual savings for an HRD and the simple payback associated with each device. To calculate the savings, the weather data for a given city must be reduced using psychrometric equations. These equations are taken from the most recent ASHRAE Fundamentals Handbook, 2002. These equations are listed in Appendix A.

The savings spreadsheets were made for this particular application and have the potential to be used to determine the effectiveness of a specific HRD in any city where dry and wet-bulb temperature data are known. These calculations are done for each of the 8,760 hours in a year just as Carrier's HAP does. This results in a detailed program that is also very flexible, with many of the components of an HRD system being treated as variables. These variables and other information about these spreadsheet methodologies are explained in Chapter Two of this thesis.

Research Objectives

The basis of this thesis is to determine if it is cost effective to use HRDs with CO_2 ventilation controls. A two-story office building that uses a VAV system with one AHU per floor and a rooftop unit for the computer room was selected for the case study. Data for five cities listed in ASHRAE Std. 90.1-2001 for Florida were studied. These cities are major metropolitan areas: Tallahassee, Jacksonville, Tampa, Orlando and Miami. Tallahassee has the most heating degree-days and least cooling degree-days for Florida. Miami has the least heating and most cooling degree-days for a large metropolitan area in Florida. With these five cities there is a diverse set of situations.

The approach was to model the subject building with Carrier's HAP using CO_2 sensors, each type of HRD, and then with both HRDs and CO_2 controls in operation simultaneously. The relative savings associated with each scenario was determined. The cost effectiveness of using each scenario based on a simple payback calculation was then determined as another comparison between each circumstance. Finally, the practicality of using HRDs with CO_2 controls was addressed while noting any restrictions or requirements of operation. With the conclusion to these research objectives, guidelines for the use of heat recovery devices and CO_2 demand control will be developed.

CHAPTER 2
ANALYSIS METHODOLOGIES

The analysis of savings related to HRDs and CO_2 DCV was modeled with the Carrier HAP v.4.10b software. The modeling of an office building with several scenarios of different HRDs and CO_2 control strategies produces estimates of savings for each scenario. As a part of the model, a spreadsheet was created for each city chosen. The spreadsheets calculate the savings and payback for each HRD. This chapter provides the methodology devised to determine the savings and cost effectiveness.

Computer Model

The Carrier HAP computer model was used to analyze cooling and heating loads for the selected office building. This model was verified by data that was collected from the actual building. The monthly kilowatt-hour data metered at the building was compared to the computer model results to prove the validity of the model. Once verified, the model was executed for the building with different HRDs and then with a CO_2 controls strategy. Finally, a scenario combining the CO_2 sensors with each HRD was executed. A savings report was created to compare the savings for each model. The following will discuss the modeling process of different building components.

The office building was modeled for each particular city stated in the research objectives. For the control most resembling actual control in the building, the zones were assigned as if they were their own spaces. This translates into some rooms (spaces) being modeled as many individual spaces. Some zones do provide the same control to two or three different rooms, which results in 63 rooms for 49 zones in the building. Each space

requires specific inputs to calculate the load for that particular space. Some examples of inputs are listed below:

- Floor area
- Ceiling height
- Lighting and equipment loads
- Occupancy and activity levels
- Schedules of occupants, lights and equipment
- Wall, roof, window and floor dimensions and thermal properties
- Infiltration rates

All wall, roof, window and floor dimensions and thermal properties were needed to calculate the building load. This information was determined by analyzing the drawings and plans for the case-study building. The wall construction in the subject two-story office building is comprised of precast concrete, two inch sprayed on insulation, metal studs and drywall. To calculate the heat transfer through the walls the overall heat transfer coefficient had to be found. The R-values for each wall component, the exterior film coefficient, and internal film coefficient were found in the 2001 ASHRAE Fundamental Handbook. Equation 2.1 used these R-values to calculate the U-factor for that particular wall.

$$\text{U-factor} = \frac{1}{\sum_{i}^{n} R_i - \text{value}} \tag{2.1}$$

The horizontal roof is comprised of built-up roofing on one and a half-inch light concrete and a four-inch insulation board. With this information the U-factor for the roof can be calculated with Equation 2.1. The windows are one-inch insulating glass (approximately 40% of the exterior walls are glass). The floor is a four-inch slab-on-grade. All wall, floor, roof, and window dimensions were measured from the drawings to account for all surfaces that transfer heat. Other information, such as the wattage of

lighting, was taken from the drawings. The wattage for the lights was broken up for each particular zone. Each zone has a particular number of different light fixtures and the lighting schedule was used to determine the wattage of each. The total wattage for each zone was then calculated by summing all the light fixtures for that particular area.

A site visit was made to verify all the building construction and other characteristics. The interior wall construction and lighting was surveyed to assure the building was properly modeled. During the site visit new construction was noted. There were new interior wall constructions and local occupancy for each particular zone had changed. The lighting and other systems were as the drawings indicated. This field verification of the building was very important in the modeling of the studied building.

The systems were modeled with each floor of the two-story building being assigned an AHU. Both AHUs use chilled water for cooling and provide air to a VAV system with ducted return. The majority of the VAV boxes are parallel fan powered boxes with electric resistance for reheat. There is also a rooftop unit that provides air through a constant air volume (CAV) system to a computer room on the second floor. For an understanding of each floor's layout, the duct layouts are shown in figures 2-1 and 2-2. The fan-powered boxes are identified by the fan terminal unit (FTU) symbol. The boxes that are noted with VAV do not have fans.

The ventilation airflow rate is set for the original design conditions, which designated 125 occupants. The building does not currently have this many occupants, but the ventilation airflow rate is set for the original design. The new occupancy was taken during the site visit. A head count was made and a total of approximately 90 people occupied the building. This level of occupancy was modeled with an excess of

ventilation entering the building. The modeled occupancy schedule is from 6 AM till 6 PM and the HVAC systems start an hour before the building is in use. The chilled water is supplied from one of two identical 40-ton air-cooled screw chillers with the other acting as a back up. The chiller information was taken from the manufacturer's specification sheets. Finally, all these systems were assigned to a building with specific electric rates. The utility rates were designated by Florida Power & Light Company as the GSD-1 rate. This rate charges $0.0428/kWh of electrical consumption and $8.16/kW of demand for each month. The tax rate applied in this utility rate is 10%. A monthly customer charge of $32.54 is applied regardless of the consumption or demand levels.

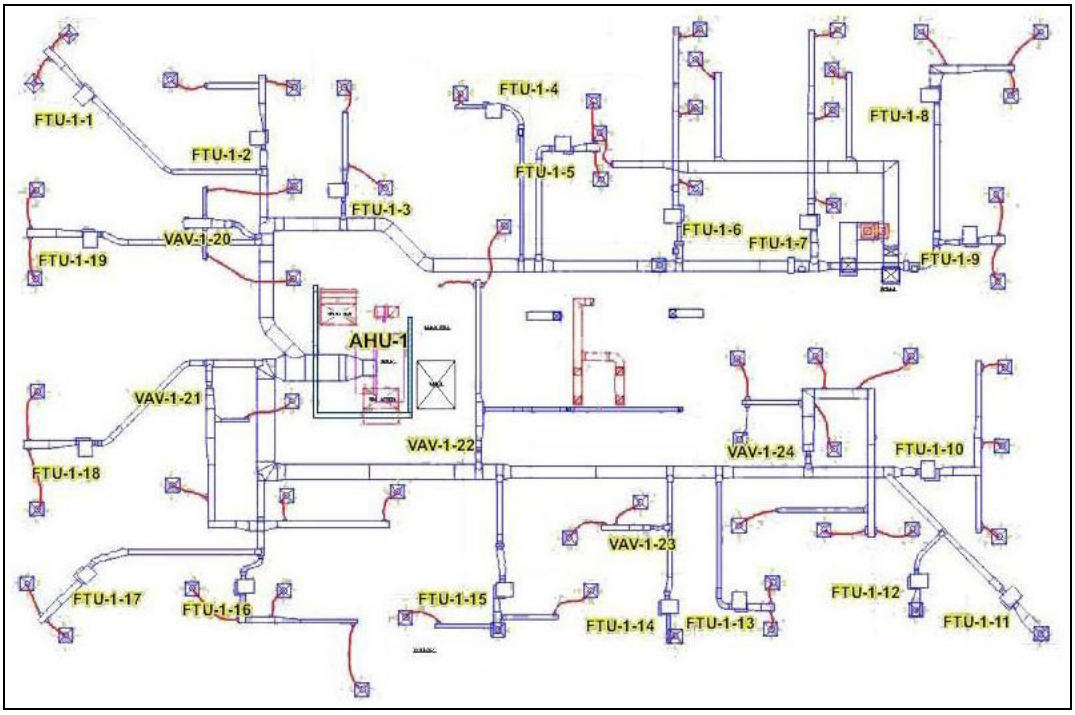

Figure 2-1. First floor duct layout displaying the locations of the 24 VAV boxes.

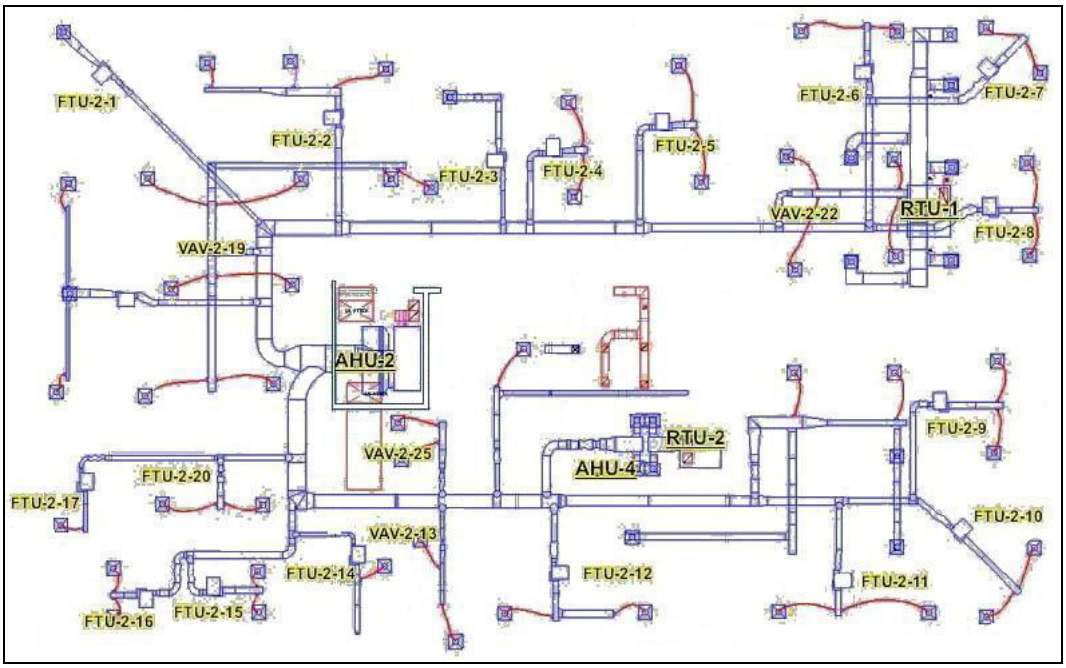

Figure 2-2. Second floor duct layout consisting of 25 VAV boxes.

Addition of HRDs

To input an HRD into the HAP model certain criteria are needed. The devices need to be noted as a sensible or sensible and latent device. The plate and heat-pipe units were entered as sensible devices. The enthalpy wheel and permeable-membrane were modeled as sensible and latent devices. The effectiveness and power consumed differs for all the HRD's. For the effectiveness and power consumed, commonly used HRDs of each type were chosen based on the design ventilation airflow rate. The effectiveness and power can be easily changed and are stated within the analysis and results chapter.

Effectiveness is calculated differently for sensible and total heat exchangers. The sensible effectiveness values were computed using the following equation:

$$\text{Thermal Effectiveness}(\%) = \frac{T_{OA} - T_{OA\_Supply}}{T_{OA} - T_{EA}} \tag{2.2}$$

Sensible effectiveness uses the dry-bulb temperatures of the outdoor air (OA), outdoor air supply (OA_Supply), and exhaust air (EA). Figure 2-3 is a diagram of these flow orientations, as they would be in a plate or membrane HRD.

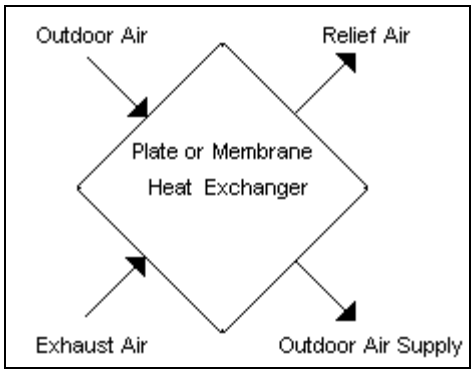

Figure 2-3. HRD illustration of the orientation of the airflows for equation 2.2.

The outdoor air supply is the preconditioned outdoor air that mixes with the return air before entering the AHU. The exhaust air is normally taken from the bathrooms or general exhaust and then exits the HRD to the atmosphere. For the total heat exchangers that transfer sensible and latent heat, dry-bulb temperatures are replaced with enthalpies at the same states, see equation 2.3.

$$\text{Thermal Effectiveness}(\%) = \frac{h_{OA} - h_{OA\_Supply}}{h_{OA} - h_{EA}} \tag{2.3}$$

An HRD schedule can be created if the system is to only operate during particular months of the year. By changing the schedule, the system could be turned off in the winter or summer, but the schedule for this model was left enabled to operate year-round. For simplicity the HAP model allows for the duplication of the model. This allows several copies of the same model in one file and the HRD can be changed very easily without recreating the same model many times.

CO_2 Ventilation Controls

Carrier's HAP controls the amount of ventilation to a space based on the occupancy level. This is not the most effective way to control ventilation. The ventilation should be controlled by the amount of CO_2 in a space. HAP uses a constant design airflow (cfm/person) that will only change with the change of occupancy. This does not work properly unless people leave the building. After discussion with Carrier's technical staff, discovery of a future model of HAP has been reported to model the CO_2 control method in a more proper manner that measures CO_2 levels.

HAP requires a design airflow, minimum airflow (%), and damper leakage rate (%). As stated previously, the design airflow is defined by using flow rate per person (cfm/person). The model uses this value and the number of occupants that the air system serves to determine the air flow rate. The minimum airflow is the percentage that VAV boxes must stay open. This minimum setting may provide the following two benefits. The electric heat strips that are in the VAV boxes must have a nominal amount of air passing over them to prevent failure. Normal practice is to use a 40% minimum opening for the boxes just for heat strip protection. The second benefit to constrain the minimum flow is to provide the minimum outside air requirement. The damper leakage rate is the percentage of outdoor air leaks in when dampers are closed due to the building being unoccupied. This value is assumed to be zero for the model.

Energy Spreadsheet Model

The energy spreadsheet model was originally created to deal with heating savings, which were not estimated properly using the HAP software. The spreadsheet model does not work directly with data supplied by the HAP model. This is an independent program that does use the same TMY data that HAP uses. The spreadsheet specializes in HRDs

and can be easily run for different units very quickly. The spreadsheet is comparable to the HAP model for HRD savings. With the HAP model not predicting any heating savings the comparison between each computer program must be done purely by cooling savings. In order to validate the spreadsheet model, spreadsheet results for cooling only were compared to HAP results for cooling. The HAP energy savings results were calculated by the difference in annual energy costs between the building modeled with and without an HRD.

The spreadsheet model allows for the balance point temperature of the building to be changed so that chillers can be turned off at this outdoor temperature, which is how the subject building operates. The internal loads of the building can create enough heat to reduce the need for the heating systems to operate. The outdoor temperature at which heating is finally needed is the balance point temperature.

This spreadsheet calculates the ventilation load savings and does not model a particular building or CO_2 control system. The spreadsheets will help compare each HRD individually with annual savings and simple payback being the calculated results. The simple payback does not take into account savings from reduction in equipment size due to HRD use. The use of an HRD will allow the load on the cooling coil to drop and the amount of energy needed from the chiller to be reduced. This may result in a smaller chiller size with a cheaper first cost. The simple payback is modeled as if the HRD was used in a retrofit situation and the reduction of other equipment size is not a factor.

The first page of each of the five spreadsheets contains all the psychrometric data for every hour for a typical year. The dry and wet-bulb temperatures are taken from TMY data and the rest of the psychrometric data is calculated with equations taken from

the 2001 ASHRAE Fundamentals Handbook (see Appendix A). The TMY data are text files that include average dry and wet-bulb temperatures for a particular city. The TMY data are typically used in load-calculating software and is used in HAP. The dry and wet-bulb temperatures and enthalpies are then taken to the next page of the spreadsheet where the savings are calculated for each hour. This savings page calculates kilowatt-hour and peak kilowatt savings for cooling and heating. Each HRD can be modeled by changing the variables located at the top of the savings sheet. These variables include:

- Effectiveness (%)
- Ventilation airflow rate (cfm)
- Air density (lb_m/ft^3)
- Building balance point (°F)
- Exhaust air enthalpy for cooling and heating (Btu/lb_{da})
- Fan and motor efficiency (%)
- Fan static pressure drop (psia)
- Cooling and heating power (kW/ton)

The building will only operate in the heating mode when the outdoor air temperature drops below the balance point. This creates a dead band region from the balance point up to the point where the ventilation air supply enthalpy or temperature is above the same exhaust condition. Whether it is a sensible or total HRD determines whether this condition is considered as enthalpy or temperature. This dead band region is where it actually costs money to have the HRD in operation. To resolve this issue a bypass could be put in place for dead band periods. A bypass will not be considered for this thesis. The spreadsheet is set up to run a bypass for a given system, but the cost of a bypass system has not been researched. The bypass system will involve different components depending on the type of HRD. The cost must include dampers, sensors, controls and any additional ductwork. Other issues with controls and how these will

match with the CO_2 controls have not been addressed and may produce more costs that have not been researched.

The final page of the spreadsheet tabulates the monthly totals of kilowatt-hours and the peak kilowatt value for that month. With these consumption and demand values, the annual savings were determined using the utility rates discussed in the Computer Model section. The first cost and installation cost of the HRD system is then used to calculate the simple payback (years) for each system. This simple payback is calculated by comparing the operating cost of a constant ventilation airflow system that uses no preconditioning of the outdoor air to the operating cost with an HRD. Equation 2.4 calculates the simple payback and is also listed in Appendix A as Equation A.16.

$$\text{Simple Payback (yrs)} = \frac{\text{Total Cost Savings per year}}{\text{Total Cost}} \tag{2.4}$$

The paybacks prescribed are for retrofits. The cost of an HRD for new construction would be slightly offset by the fact that the refrigeration equipment could be sized down. The retrofit payback that is being calculated is actually larger than what it would be for new construction.

CHAPTER 3
RESULTS AND DISCUSSION

This chapter discusses the results created with both computer models for each scenario involving HRDs and CO_2 DCV. The sections are categorized by scenario type. The first section is dedicated to HRD's operating alone and the results from the HAP model and the spreadsheet model. The use of a CO_2 control system is addressed next. The final section discusses the scenarios involving an HRD with a CO_2 control system.

Heat Recovery Devices

Each HRD was first simulated in the HAP model that was created for the case-study office building. The case-study building was modeled in HAP for each of the five Florida cities as a reference for each HRD to be compared to for annual savings. The annual savings for each HRD is only associated with savings due to cooling. The HAP model does not take into account any savings for heating mode. The reason for this has not been identified, but the model also cannot be set to shut off the chillers when the outdoor air drops below the balance point. This operation of shutting down chillers is how the case-study building conducted energy management, but this is not a standard for all buildings.

Assuming equal electric rates for all five Florida cities, the annual energy cost, annual electrical consumption and maximum demand cost was compared between each city without the use of an HRD. The annual energy cost and electrical consumption is listed in Table 3-1. This comparison is used to create an idea of how the case-study building would operate in any of the given Florida cities. For a more detailed comparison

of these cities, Tables 3-2 and 3-3 compare the monthly electrical consumption and maximum demand for each of the five cities.

Table 3-1. Annual energy cost and electrical consumption for five Florida cities without the use of an HRD.

Florida City	Annual Energy Cost ($)	Annual Electrical Consumption (kWh)	Energy Cost ($/ft^2)	Electrical Consumption (kWh/ft^2)
Tallahassee	55,037	747,656	2.13	28.9
Jacksonville	54,604	745,059	2.11	28.8
Tampa	53,791	742,988	2.08	28.7
Orlando	53,933	742,978	2.08	28.7
Miami	54,081	748,261	2.09	28.9

Table 3-2. Monthly electrical consumption for five Florida cities without the use of an HRD.

Month	Electrical Consumption (kWh)				
	Tallahassee	Jacksonville	Tampa	Orlando	Miami
Jan.	66,782	65,759	63,199	63,269	62,541
Feb.	57,249	56,420	55,403	54,720	55,299
March	59,702	58,564	59,111	59,225	60,336
April	59,528	59,852	59,681	59,818	61,296
May	63,357	63,910	64,790	64,980	65,085
June	60,302	60,494	61,025	61,230	60,977
July	66,732	66,784	67,034	67,503	67,643
Aug.	64,981	65,503	65,956	65,478	66,286
Sept.	61,179	61,270	62,375	62,029	63,397
Oct.	62,398	62,257	64,092	64,003	64,866
Nov.	59,776	59,568	58,656	58,826	59,500
Dec.	65,671	64,677	61,666	61,895	61,036

The costs associated with the office building are very similar for Tampa and Orlando. This is to be expected due to the close distance between the cities and that they are almost on the same latitude line. The other cities vary in operating energy and annual cost. It is important to note that for each city the energy costs due to cooling and heating account for 26% of the annual cost. This is a large percentage and leaves a lot of room for reducing annual energy cost. This leads to operating the building with each HRD to find the savings associated with each.

Table 3-3. Monthly maximum demand for five Florida cities without the use of an HRD applied.

Month	Maximum Demand (kW)				
	Tallahassee	Jacksonville	Tampa	Orlando	Miami
Jan.	211.7	197.4	172.8	174.0	159.8
Feb.	174.2	165.8	162.8	160.7	165.9
March	180.6	160.9	158.7	165.3	165.6
April	163.7	170.7	164.5	165.2	169.6
May	171.7	174.1	172.7	177.1	172.5
June	183.7	189.7	177.9	182.5	177.9
July	183.1	180.2	180.5	185.1	179.2
Aug.	180.5	186.4	180.4	180.7	180.6
Sept.	176.9	179.9	174.6	175.5	180.3
Oct.	163.1	159.2	175.8	167.3	176.5
Nov.	171.9	167.1	164.9	162.8	163.0
Dec.	201.2	196.1	162.1	167.7	161.4

The effectiveness values and power consumed by each HRD was needed for modeling purposes. Different vendors were contacted for selection data. These data include the effectiveness values that are needed. The permeable-membrane is not a device that can be purchased at this time. The values for this HRD are taken from uncertified data provided by the vendor.

Since this is a retrofit, additional fans were required to overcome the pressure drop of the HRD. The fan power was calculated for each HRD with the following equation.

$$\text{Fan Power (kW)} = \frac{Q \cdot p_{static} \cdot 0.746}{6356 \cdot \eta_{fan} \cdot \eta_{motor} \cdot \rho_{air} \cdot \nu} \tag{3.1}$$

The pressure drop is substituted in for the p_{static} value to calculate the fan power. The fan power equation also consists of the air flow rate, Q (cfm), efficiencies, η, air density, ρ_{air} (lb/ft^3), and specific volume, ν (ft^3/lb). This power must be doubled because there are two fans in the HRD. The effectiveness values and power are listed in Table 3-4 for each HRD. The effectiveness values are sensible effectiveness for the heat pipe and plate, but the heat wheel and permeable-membrane have the total effectiveness values listed.

Table 3-4. HRD effectiveness and power consumption values.

Heat Recovery Device	Effectiveness (%)	Power Consumed (kW)
Permeable-membrane	70	1.1
Enthalpy wheel	69	1.3
Heat pipe	58	0.48
Plate	61	1.1

For the enthalpy wheel and membrane, the two that use sensible and latent heat exchange, the effectiveness values are relatively the same but notice that the enthalpy wheel requires more power. This is due to the need for power to rotate the wheel at all times. The heat pipe has a low effectiveness value, which is a flag that this will not produce much savings, especially since this is only for the sensible exchange. The plate has a slightly higher effectiveness, but this consumes considerable power. With these data the model was then run for each city with each HRD.

The first result compared for each HRD was the annual energy cost. The annual energy cost for the building is listed for each HRD and without an HRD in Table 3-5. These results show that the membrane is the best HRD to use according to annual energy cost reduction. The heat pipe and plate do not reduce the annual energy cost significantly. The plate tends to increase the energy cost and only reduces the cost slightly in Tallahassee and Jacksonville where the temperatures become colder. It can be stated that the use of HRDs that only exchange sensible heat should not be used in Florida. This confirms information that has already been stated by some vendors. Figure 3-1 designates the geographical locations in the U.S. where sensible HRD's should be used according to Venmar Company. With permission from Tom Barrow Co., this figure was taken from the Venmar web page. This figure designates sensible HRD's as HRV units. The darker of the two regions is where enthalpy HRDs should be used and the lighter regions designate HRV unit use.

Table 3-5. Annual energy cost for the case-study building with each HRD.

Florida City	Annual Energy Cost ($)				
	No HRD	Membrane	Enthalpy wheel	Heat pipe	Plate
Tallahassee	55,037	54,427	54,474	54,950	55,020
Jacksonville	54,604	53,945	53,996	54,513	54,587
Tampa	53,791	53,095	53,153	53,715	53,806
Orlando	53,933	53,158	53,219	53,836	53,935
Miami	54,081	53,084	53,156	54,034	54,157

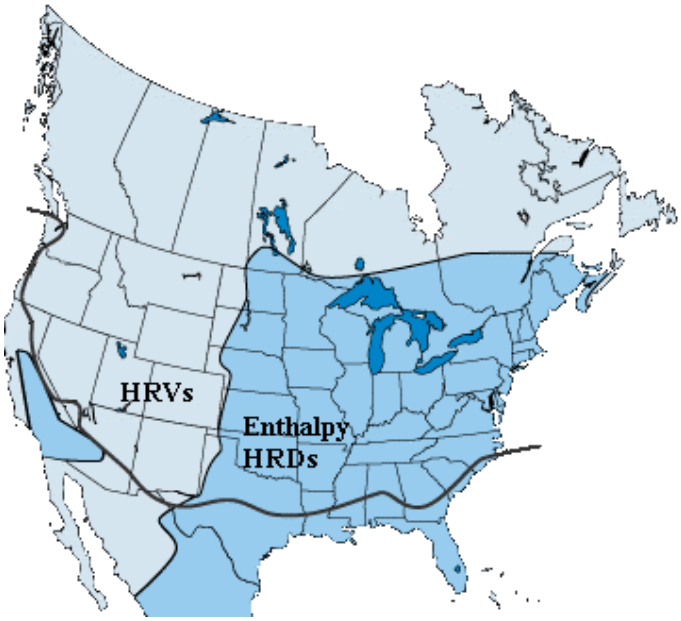

Figure 3-1. Geographical locations for designation of recommended HRDs.

The data that have been presented have only taken into account the savings due to cooling. As stated previously, the heating savings does not show up in the HAP model. For the total savings associated with each HRD, the energy spreadsheet model was run. To compare these two models the spreadsheet heating savings was deleted to only account for cooling. These data compare well for the enthalpy exchangers, but the sensible device data do not match. The data are shown in Table 3-6 with the HAP model data being assumed as the correct data in the percent difference calculation.

Table 3-6. Cost savings data comparisons for each cooling model.

Florida City	HRD	Spreadsheet ($)	HAP ($)	% Difference
Tallahassee	Membrane	562	610	7.8
	Enthalpy wheel	508	563	9.8
	Heat pipe	0	87	100
	Plate	-112	17	758
Jacksonville	Membrane	557	659	15
	Enthalpy wheel	502	608	17
	Heat pipe	2	91	98
	Plate	-112	17	758
Tampa	Membrane	725	696	4.2
	Enthalpy wheel	666	638	4.4
	Heat pipe	20	76	74
	Plate	-97	-15	547
Orlando	Membrane	752	775	3.0
	Enthalpy wheel	692	714	3.1
	Heat pipe	53	97	45
	Plate	-64	-2	310
Miami	Membrane	1018	997	2.1
	Enthalpy wheel	954	925	3.0
	Heat pipe	84	47	79
	Plate	-31	-76	59

The percent difference between the spreadsheet and the HAP model, for energy cost, ranges from 2.1 to 17% for the enthalpy exchangers. The high-end difference is not technically an issue with the spreadsheet. Contact with Carrier resulted in the knowledge that the software does not allow for simulations of reclaim devices that are counter productive. In terms of the HRD use, this means that the penalty due to operating in the dead band region is not taken into account. This becomes more of an issue for larger dead band regions and is most likely the issue with the Jacksonville and Tallahassee HAP data. Why the sensible HRD values are not closer between models is not completely understood. Carrier has been contacted and this issue is being addressed. A part of this may be due to the void of penalty in the HAP model. Regardless of this difference, the HAP model has shown that the use of sensible HRDs is not effective. The spreadsheet

readdresses this by accounting for heating. The heating savings does increase the total savings, but this does not mean the simple payback is reasonable.

The spreadsheet model calculates the total cost savings based on electrical consumption and demand. The utility rate for electrical consumption and monthly demand are taken from the previously mentioned FP&L's GSD-1 rate. The consumption rate is $0.0428/kWh and the monthly demand rate is $8.16/kW. These rates are applied to the total consumption and total maximum demand for each month to produce the total cost savings. These total cost savings for each HRD are shown in Table 3-7 for all five Florida cities.

Table 3-7. Total annual cost savings for each HRD in all five Florida cities.

Florida City	HRD	Total Annual Cost Savings ($)
Tallahassee	Membrane	2,532
	Enthalpy wheel	2,436
	Heat pipe	1,055
	Plate	965
Jacksonville	Membrane	2,247
	Enthalpy wheel	2,155
	Heat pipe	895
	Plate	796
Tampa	Membrane	1,918
	Enthalpy wheel	1,831
	Heat pipe	634
	Plate	522
Orlando	Membrane	1,684
	Enthalpy wheel	1,602
	Heat pipe	533
	Plate	420
Miami	Membrane	1,666
	Enthalpy wheel	1,586
	Heat pipe	433
	Plate	320

The spreadsheet yields the same conclusions as the HAP results. The enthalpy HRDs produce considerably more cost reduction than the sensible devices. This defends

Figure 3-1 more in regards to sensible devices not being used in the southeast. These cost savings values were then used to calculate the simple payback associated with each HRD. The vendors gave the estimated cost for each unit when selection data were provided. Some costs for fans, filters and other components have been estimated and added onto the price of the HRD. The installation cost for most of these units is similar because the devices come as a packaged unit that would have similar duct arrangements, controls, and weight to be hoisted onto the roof. The total cost combines the first cost and installation and was then used in the simple payback. The simple payback must be less than the life of the system for it to have any benefit. For a new construction installation, a payback between one and three years is generally an indication of a cost effective system. The payback would be slightly longer for a retrofit. This must be taken into account when observing Table 3-8 for the simple payback for each HRD in all five cities.

The total costs of the enthalpy wheel and membrane units were estimated as the same price and both devices payback within the same year. These results show that for a retrofit application, an enthalpy wheel or membrane could be used and both devices will provide similar savings and simple payback. The payback is less for the cities located above 28.4° latitude for Florida. The north Florida outdoor temperatures are colder during the winter and provide more opportunities for savings due to heating. The life of most of these systems can be from 10-15 years or longer. The heat pipe and plate produce paybacks less than 9.5 years. This re-enforces that sensible devices should not be used in Florida. The permeable-membrane HRD types are not commercially available at the moment. However, this product will be available in the near future.

In new construction, the first cost would be less when using an HRD because booster fans may not be needed in the units and ductwork requirements may be less. As previously mentioned, partial cost of the HRD could be offset by reduction in other HVAC systems, such as chiller size. For example, if a system were selected and sized for Orlando with a membrane HRD, then the chiller size could be reduced by 7 tons. The chiller in operation for the case-study building has a capacity of 40 tons. A reduction of 7 tons results in an 18% reduction in chiller capacity. This is a significant reduction and in some cases will offset a significant fraction of the price of an HRD in new construction. This reduction was calculated for the Florida city with the least chiller size reduction. The reduction will result in a much shorter payback and should be considered when the retrofit scenario data are reviewed.

Table 3-8. Simple payback for each HRD retrofit in all five Florida cities.

Florida City	HRD	Estimated Total Cost ($)	Simple Payback (yrs)
Tallahassee	Membrane	13,750	5.4
	Enthalpy wheel	13,750	5.6
	Heat pipe	10,000	9.5
	Plate	12,500	13.0
Jacksonville	Membrane	13,750	6.1
	Enthalpy wheel	13,750	6.4
	Heat pipe	10,000	11.2
	Plate	12,500	15.7
Tampa	Membrane	13,750	7.2
	Enthalpy wheel	13,750	7.5
	Heat pipe	10,000	15.8
	Plate	12,500	24.0
Orlando	Membrane	13,750	7.4
	Enthalpy wheel	13,750	7.8
	Heat pipe	10,000	18.8
	Plate	12,500	29.7
Miami	Membrane	13,750	8.3
	Enthalpy wheel	13,750	8.7
	Heat pipe	10,000	23.1
	Plate	12,500	31.2

Carbon Dioxide Demand Control Ventilation

There are some issues with modeling the CO_2 controls in Carrier's HAP. As addressed in Chapter 2, the program sets the ventilation flow rate by occupancy level and a design airflow rate. There is no monitoring of CO_2 to create demand control. This means that there will be no significant savings unless people leave the building and there is significant diversity in the occupancy schedule. With HAP's method of controlling ventilation flow, the savings could be under estimated. If the outdoor air's concentration is less than 350 parts per million of CO_2 and the occupants are not very active and in good health, then the controls could lower the ventilation flow rate even with full occupancy. This can not be modeled with the current modeling technique that HAP uses.

Another issue with the model is that the ventilation airflow has been defined by the original occupancy of the building. The current occupancy is considerably less than the initial design called for and would result in the HVAC systems providing excess ventilation. A comparison of a CO_2 controlled case with the excess ventilation case would result in great savings that is not due to the CO_2 controls. For a better benchmark for comparison, a model was created by using the appropriate ventilation flow rate for the current occupancy level. The building is estimated to have 91 occupants which results in 1,820 cfm of ventilation flow. To give reference to how much savings would have been falsely attributed to the CO_2 controls if compared to the excess ventilation case, the excess and non-excess ventilation loads were compared. Equation 3.2 was used to calculate the ventilation load (tons), which is based on the difference in outdoor and room enthalpy. The resulting difference in these loads for Orlando is 2.8 tons under design conditions.

$$\text{Ventilation Load} = \frac{Q \cdot \rho_{air} \cdot 60(\text{min/hr}) \cdot (h_{OA} - h_R)}{12{,}000} \tag{3.2}$$

With both of these issues in mind another change was made in the modeling strategy. The case-study building shuts off all systems during the evenings and this provides significant savings to the owner. Not all buildings operate this way, many buildings operate their HVAC systems in the evening also. These systems may run to serve security or janitorial occupants, or to maintain the quality of the materials in the building. If ventilation is not controlled then there can be a large excess of ventilation. CO_2 monitoring can provide significant savings for commercial buildings by reducing this excess ventilation. Therefore, a modification for CO_2 control modeling was conducted with cooling operating during unoccupied times. This is compared with the modified constant ventilation scenario that also operates during off hours.

The HAP model is the only CO_2 modeling done for this research so there is no comparison required with a spreadsheet model. The new scenario was produced in HAP for each of the five cities and the results are illustrated in Table 3-9.

Table 3-9. CO_2 annual energy cost for a continuously operating system.

	Annual Energy Cost ($)		Annual Cost
Florida City	No CO_2 Control	CO_2 Control	Savings ($)
Tallahassee	62,000	61,757	243
Jacksonville	61,643	61,279	364
Tampa	61,291	60,752	539
Orlando	61,294	60,767	527
Miami	62,107	61,266	841

Miami is the best candidate for a CO_2 control system. Tallahassee and Jacksonville do not fair as well due to their colder climates. The simple payback for a control system was calculated for each city. The prices for CO_2 sensors are from AirTest's catalog of

CO_2 sensors. These sensors can come with integrated temperature control and other accessories. This is not needed due to the building already being equipped with thermostats and direct digital control (DDC). For CO_2 sensor first cost, an arrangement of two sensors, one for each AHU return air duct, was assumed to provide sufficient control. The cost also accounts for connections and installation. It was assumed that this would be adequate because of the building size. This type of control would not work for most large buildings because averaging over many more spaces might allow for a space to become under ventilated more easily. This would be an average CO_2 level for all the zones associated with that AHU. For more detailed control, wall-mounted sensors would be used in many zones to control the ventilation in each zone separately. The wall-mounted sensors cost is equal to the duct-mounted, but there would be more sensors in total. Based on AirTest technical staff, the sensors have a cost of $409 with the installation being estimates as double the first cost. Table 3-10 lists the savings, total cost and simple payback for a control system used in each of the five Florida cities.

Table 3-10. Simple payback for a CO_2 control system operating in a continuously operating system.

Florida City	Annual Cost Savings ($)	Total Control System Cost ($)	Payback (yrs)
Tallahassee	243	2,500	10.3
Jacksonville	364	2,500	6.9
Tampa	539	2,500	4.6
Orlando	527	2,500	4.7
Miami	841	2,500	3.1

The simple payback results conclude that a CO_2 system, as described above, is not a reasonable choice for this size of a building located in Tallahassee and most likely not reasonable for a building in Jacksonville. The life of a system is normally 10 to 15 years and the Tallahassee payback is much too long. The Jacksonville scenario is half the life

of the system. The other cities do have favorable payback and would be definite candidates for a CO_2 control system. Cost effective simple paybacks are normally considered in a range from one to three years.

For a building that saves energy by shutting the HVAC systems off during the evenings, there may not be a significant need for CO_2 control unless there are large variations in the occupancy levels throughout the day. This variation in occupancy schedule could not be modeled with the resources at hand and should be tested in the future when more updated software becomes available. However, a building of this size and construction could use DCV effectively for cities in and south of central Florida if the HVAC systems run 24 hours a day.

Heat Recovery with a CO_2 Control System

The previous sections have concluded that heat recovery devices that exchange total heat are cost effective for cities north of 28° latitude for Florida. The case-study building would not be a great candidate for a CO_2 control system, but a similar building under continuous HVAC operation would be south of 28.4° latitude for Florida. At first glance the combination of these systems would only be cost effective for areas around 28° latitude in Florida. Due to the CO_2 modeling of a different operating procedure, this assumption cannot be taken. The combination of both systems was modeled with 24 hour HVAC system operation. This is the same modeling technique applied to the CO_2 demand control. The HRDs were remodeled for the evening operation so that all three scenarios could be compared properly. The issue of modeling these systems under a new operational schedule is that there is no data for verification.

There were many assumptions for a HAP model using the continuous scenario with the selected HRDs and CO_2 controls. The ventilation flow rate for HRDs was decreased because ventilation was not modeled in excess. The decrease in airflow through the HRD would require a new selection, but for a rough estimate it was assumed that the effectiveness and pressure drops are the same. However, the power consumed was recalculated for each HRD. The HAP model does not calculate any heating savings and this is a big issue for this analysis. To try and compare the use of only HRDs, only CO_2 control and the combination of both for the case-study building these assumptions were used.

Based on the previous modeling results, modeling was conducted for Tampa since this is in a region where we know HRDs and CO_2 controls are cost effective. The simple paybacks were calculated with the membrane HRD without heating and then an estimated heating cost savings was added based off previous spreadsheet models. The data for the simple paybacks are not completely accurate to actual operational data. The simple payback for a building with a membrane HRD was within half a year of using both CO_2 controls and a membrane HRD. The simple payback estimates were between six to seven years, but these are still not as short as 4.6 years that CO_2 controls produce alone. Based on this estimate it would be more cost effective to only use the ventilation controls. However, the building has been changed and many assumptions were taken when this conclusion was made. I would not take this as a guideline in choosing whether to use an HRD or CO_2 controls. The rough estimate may still be a good indicator that the use of both is not effective for Florida cities. Table 3-11 provides the simple paybacks for use

of HRDs, CO_2 controls and both systems with the case involving 24-hour building operation and adjusted ventilation flow.

Table 3-11. Simple paybacks for all three scenarios with 24-hour building operation and adjusted ventilation flow.

Tampa	Membrane HRD	CO_2 control	Both HRD and CO_2 control
Simple payback (yrs)	6.6	4.6	7.2

For selection of which system to use, the previous sections should be used. A more detailed solution is needed to fully determine whether or not both types of systems should be used in conjunction. The CO_2 modeling should also be readdressed when the next Carrier software comes available. More recommendations will be listed in the next chapter.

CHAPTER 4
CONCLUSIONS

Conclusions to this thesis are discussed in full detail below, but for something the main conclusions are listed as the following:

1. Heat recovery devices that exchange only sensible heat are not cost effective for Florida.

2. Heat recovery devices that exchange sensible and latent heat are cost effective for regions in northern Florida (cities above 28.4° latitude).

3. Heat recovery devices that exchange sensible and latent heat could be considered for areas in central and south Florida (cities below and at 28.4° latitude).

4. Carbon dioxide demand control ventilation is cost effective for regions in and south of central Florida (cities below and at 28.4° latitude).

5. Carbon dioxide demand control ventilation could be considered for northeast Florida (cities above 28.4° latitude), but control should not be considered for northwest Florida.

6. Using both energy conservation systems is not cost effective for Florida, but more research should be conducted before this combination is abandoned.

Due to the rising costs of energy, there is a continued emphasis to develop energy conservation measure to reduce building energy bills. Two systems that have received considerable attention in today's marketplace are heat recovery devices and carbon dioxide demand control ventilation. Both of these systems have been proven to reduce a building's annual energy, but the use of them together has not been extensively studied. This thesis evaluated this situation by analyzing each energy conservation system separately and then combined for five Florida cities. All three scenarios were then compared by the amount of energy saved and the simple payback associated with each.

A central Florida commercial office building was selected for the case study and was modeled and verified with actual data collected at the site to aid in this study.

The heat recovery devices were studied by modeling four different devices. These devices exchange heat, mass or both between ventilation air and building exhaust. A plate heat exchanger and heat pipe, which exchange only sensible heat, were studied and results determined that these devices were not cost effective to operate in Florida. An enthalpy wheel and permeable-membrane heat exchanger, which exchange both heat and moisture, were analyzed for the same cities and were found to be cost effective for most of northern Florida. Sensible devices were concluded not to be effective for Florida and enthalpy devices could be considered for most cities in Florida with best effectiveness in the north.

The carbon dioxide demand control for this case-study building would not produce much savings with the HVAC system operating schedule that was applied. Another issue that affected the results was the fact that the building was operating with ventilation due to a decline in occupancy over the years. After validating the computer model with the actual building schedule and metered data, the model input was revised. For modeling purposes the operating schedule and ventilation flow rate were changed so that the systems would function at night and the savings would only be a function of the control and not exaggerated. The model would have shown that the control system reduced the original design ventilation flow rate to the rate needed for the new occupancy. This savings would not be observed in a building that had a proper ventilation design and is not a function of occupancy changing throughout the day. The analysis of the carbon dioxide control, under the new operating schedule, resulted in positive cost effectiveness

for cities in and south of central Florida. Cities that are in northeast Florida, near Jacksonville, could be considered for this type of control, but northwest cities probably should not consider it.

Combining the two types of systems was not as accurate as studying each separately. This was because each system was modeled differently due to the demand Carrier HAP control model changing the operating schedule and ventilation flow rate. This change created a different reference for each study. To try and determine some type of effectiveness, the heat recovery devices were modeled again for one city so that the reference would be the same. This was done for central Florida due to both systems being cost effective separately in this region. Assumptions had to be made for the remodeling of the heat recovery devices, which made this part of the study less accurate. With all the systems analyzed under the new schedule and ventilation flow rate, it was determined that using both energy reduction systems was just as effective as using only recovery devices. This should only be considered for most Florida cities and not other states. It may be that these types of systems are effective, but until more detailed research is done, the idea of using heat recovery with demand control should not be abandoned.

Future study of a building with carbon dioxide demand control ventilation has been recommended. The building in this study should operate under general 24-hour HVAC operation for better modeling. Other recommendations have been given and should be addressed or considered in any future research.

CHAPTER 5
RECOMMENDATIONS FOR FUTURE WORK

There are a few issues related to this work that should be considered for future research. The following recommendations have been divided into issues regarding modeling and the case-study building. Some of these recommendations are now being studied by other researchers.

Modeling Recommendations

The modeling recommendations address both Carrier's HAP model and the energy spreadsheet model. The HAP model did not produce any heating savings. At first it was thought that the outdoor temperature did not reach a cold enough temperature for HAP to evaluate savings. To test if this was the issue, the building simulation was run for several northern cities and the HRDs still did not provide any heating savings. This issue is being addressed with Carrier technical staff to find if this is a limitation with this specific model or if the software is not operating correctly. Another matter that Carrier is being asked to study is why the spreadsheet model and HAP model do not agree on energy savings associated with sensible HRDs. Both of these issues need to be solved so the spreadsheet heating savings can be verified and sensible HRDs can be modeled correctly.

It is recommended that the CO_2 modeling be reproduced when a new simulation technique that measures CO_2 levels becomes available. Carrier has new software being issued in the near future that will provide this modeling technique. With a better modeling technique, an improved understanding of energy savings due to CO_2 control will be created.

The spreadsheets are specific to a given city and have been formatted so that four days of data fill a given page. The formatting was difficult when producing a spreadsheet with the TMY data. These spreadsheets could be beneficial to engineers once heating savings are verified. If this spreadsheet is reformatted to facilitate the input of TMY data then practicing engineers could use this as a useful tool in evaluating heat recovery devices. Other recommendations for the spreadsheets are listed below:

- Allow operating schedule to be a variable
- Provide for continuous chiller operation
- Verify bypass operation with field data
- Add costs associated with a bypass system
- Compare results with other energy savings estimates (ex: bin temperature method)

Case Study Recommendations

The case-study building that was used for this thesis did not have a CO_2 control system. It would be extremely useful if a building that uses CO_2 control could be studied with this model and then retrofitted with a heat recovery device to evaluate the effectiveness of HRDs with CO_2 controls. This study could be used to verify future modeling techniques involving CO_2. If possible there should also be studies done with different types of control systems. Systems involving several wall-mounted sensors should be compared with return air duct sensor systems. This would provide helpful design information to engineers.

There were issues when comparing the use of HRDs, CO_2 control and then both systems together. This was due to the modeling of two different HVAC system operating schedules. When a building is chosen for future research, the operating schedules of the building should be noted because simulations may become an issue. A building with a more general operating schedule, where the system runs during the evenings, should be

studied because it should be more representative of the operation of large commercial office buildings or retail stores.

The current case-study building was modeled with HAP and verification was made through electrical consumption data collected at the site. Further verification should be made over the upcoming summer months. This operation will provide extreme outdoor air conditions for the HRD to condition and will give a chance for a new bypass system to be modeled. This scenario would then allow the spreadsheet bypass operation to be verified.

APPENDIX A
SPREADSHEET EQUATIONS

This appendix lists the equations used to develop the savings spreadsheets. Some equations may differ in the spreadsheet due to if statements. The values for some of the equations in the savings section are variables and can be changed for different systems. All psychrometric equations are from the 2001 ASHRAE Fundamentals Handbook.

Psychrometric Equations

The dry and wet-bulb temperatures are taken from the TMY data and converted from Fahrenheit to Rankine, using equation A.1. These temperatures are used to calculate the saturation pressure associated with each. If the temperature is below 32°F then equation A.2 is used, equation A.3 is used for temperatures greater than 32°F.

$$T(^{\circ}R) = T + 459.67 \tag{A.1}$$

$$\ln(p_{ws}) = C_1/T + C_2 + C_3 \cdot T + C_4 \cdot T^2 + C_5 \cdot T^3 + C_6 \cdot T^4 + C_7 \cdot \ln(T) \tag{A.2}$$

$$\ln(p_{ws}) = C_8/T + C_9 + C_{10} \cdot T + C_{11} \cdot T^2 + C_{12} \cdot T^3 + C_{13} \cdot \ln(T) \tag{A.3}$$

C_1 = -10214.165
C_2 = -4.8932428
C_3 = -0.53765794 E-02
C_4 = 0.19202377 E-06
C_5 = 0.35575832 E-09
C_6 = -0.90344688E-13
C_7 = 4.1635019
C_8 = -10440.397
C_9 = -11.29465
C_{10} = -0.027022355
C_{11} = 0.1289036 E-04
C_{12} = -0.24780681 E-08
C_{13} = 6.5459673

The following equations are used to calculate the relative humidity and enthalpy of the air. See the nomenclature section for a list of all symbols.

$$W_s^* = 0.62198 \cdot \frac{p^*_{ws}}{p - p^*_{ws}} \tag{A.4}$$

$$W = \frac{\left(1093 - 0.556 \cdot T^*\right) \cdot W_s^* - 0.24 \cdot \left(T - T^*\right)}{1093 + 0.444 \cdot T - T^*} \tag{A.5}$$

$$W_s = 0.62198 \cdot \frac{p_{ws}}{p - p_{ws}} \tag{A.6}$$

$$\mu = \left.\frac{W}{W_s}\right|_{T,p} \tag{A.7}$$

$$\phi = \left(\frac{\mu}{1 - (1 - \mu) \cdot (p_{ws}/p)}\right) \cdot 100 \tag{A.8}$$

$$\nu = \frac{0.7543 \cdot T(^\circ R) \cdot \left(1 + 1.6078 \cdot W\right)}{29.92} \tag{A.9}$$

$$h = 0.240 \cdot T + W \cdot \left(1061 + 0.444 \cdot T\right) \tag{A.10}$$

The final two calculations within the psychrometric section of the spreadsheet are for the water vapor partial pressure and dew point temperature. The dew point calculation is iterative and A.12 should be used when temperatures are above 32°F and A.13 when below.

$$p_w = \frac{p \cdot W}{\left(0.62198 + W\right)} \tag{A.11}$$

$$\begin{aligned} T_d = {} & 100.45 + 33.193 \cdot \ln(p_w) + 2.319 \cdot \left(\ln(p_w)\right)^2 + 0.17074 \cdot \left(\ln(p_w)\right)^3 \\ & + 1.2063 \cdot p_w^{0.1984} \end{aligned} \tag{A.12}$$

$$T_d = 90.12 + 26.142 \cdot \ln(p_w) + 0.8927 \cdot \left(\ln(p_w)\right)^2 \tag{A.13}$$

Savings Equations

There are several equations used to calculate the kilowatt-hour savings for every hour of the year. First, equation 2.1 is used to calculate the outdoor air supply enthalpy or temperature with all other states and the effectiveness are known. The process is to evaluate the savings in tons for cooling or heating and then determine the kilowatt value for that hour. The average kilowatt over a one-hour interval results in an average kilowatt-hour value for that hour. The following equations are for the enthalpy and sensible heat exchangers. Equation A.14 can be used to evaluate the savings associated with cooling and heating. The reduction for cooling/heating is calculated in tons and the electrical savings is expressed in kilowatt-hours. The kW/ton value used in A.15 is the amount of power required for every ton of cooling produced by the cooling coil. For heating the kW/ton value is the amount of energy an electric heat strip or any other heat source would require.

$$\text{Reduction of Cooling/Heating} = \frac{\rho_{air} \cdot 60 \cdot Q \cdot \left(h_{OA} - h_{OA\_Supply}\right)}{12{,}000} \tag{A.14}$$

$$\text{Electrical Savings} = (\text{reduction}) \cdot (\text{kW/ton}) - \left(\frac{Q \cdot p_{static} \cdot 0.746}{6356 \cdot \eta_{fan} \cdot \eta_{motor} \cdot \rho_{air} \cdot \nu}\right) \tag{A.15}$$

The electrical savings is corrected for the fan power that may be needed if additional fan power is required for a retrofit application. The spreadsheet allows for a different equation to be used instead of A.15 so that a known power may be subtracted instead of the fan power calculation. The monthly electrical consumption (kWh) and electrical demand (kW) savings values are recorded for evaluating the total savings. The consumption and demand are assessed different utility costs and added to determine the

total cost savings. A first cost of the HRD including installation is calculated using a unit price per cfm of ventilation air. With these values a simple payback is determined.

$$\text{Simple Payback (yrs)} = \frac{\text{Total Cost Savings per year}}{\text{Total Cost}} \tag{A.16}$$

APPENDIX B
CARRIER HAP AND SPREADSHEET DATA

This appendix provides sample data for different cities and scenarios for the HAP and spreadsheet models. The following information is the HAP air system output data for the first floor air Jacksonville handling unit:

Air System Information

Air System Name	**AHU-1**	Number of zones	**24**
Equipment Class	**CW AHU**	Floor Area	**12754.1** ft²
Air System Type	**VAV**		

Sizing Calculation Information

Zone and Space Sizing Method:

Zone CFM	**Peak zone sensible load**	Calculation Months	**Jan to Dec**
Space CFM	**Individual peak space loads**	Sizing Data	**Calculated**

Central Cooling Coil Sizing Data

Total coil load	**30.9** Tons	Load occurs at	**Jul 1600**
Total coil load	**370.8** MBH	OA DB / WB	**93.5 / 76.9** °F
Sensible coil load	**310.8** MBH	Entering DB / WB	**79.4 / 63.2** °F
Coil CFM at Jul 1600	**10512** CFM	Leaving DB / WB	**51.9 / 50.5** °F
Max block CFM at Aug 1600	**10644** CFM	Coil ADP	**48.9** °F
Sum of peak zone CFM	**11179** CFM	Bypass Factor	**0.100**
Sensible heat ratio	**0.838**	Resulting RH	**43** %
ft²/Ton	**412.8**	Design supply temp.	**55.0** °F
BTU/(hr-ft²)	**29.1**	Zone T-stat Check	**23 of 24 OK**
Water flow @ 10.0 °F rise	**74.20** gpm	Max zone temperature deviation	**0.3** °F

Supply Fan Sizing Data

Actual max CFM at Aug 1600	**10644** CFM	Fan motor BHP	**13.96** BHP
Standard CFM	**10633** CFM	Fan motor kW	**10.41** kW
Actual max CFM/ft²	**0.83** CFM/ft²	Fan static	**4.00** in w.g.

Outdoor Ventilation Air Data

Design airflow CFM	**1250** CFM	CFM/person	**28.28** CFM/person
CFM/ft²	**0.10** CFM/ft²		

This data and the following second floor Jacksonville air handling unit data are for the modeled case-study office building with no HRD or CO_2 ventilation controls. This data provides very important information for system design.

Air System Information

Air System Name	**AHU-2**	Number of zones	**25**
Equipment Class	**CW AHU**	Floor Area	**12845.0** ft²
Air System Type	**VAV**		

Sizing Calculation Information

Zone and Space Sizing Method:

Zone CFM	**Peak zone sensible load**	Calculation Months	**Jan to Dec**
Space CFM	**Individual peak space loads**	Sizing Data	**Calculated**

Central Cooling Coil Sizing Data

Total coil load	**31.4** Tons	Load occurs at	**Aug 1600**
Total coil load	**376.2** MBH	OA DB / WB	**93.5 / 76.9** °F
Sensible coil load	**316.5** MBH	Entering DB / WB	**79.5 / 63.2** °F
Coil CFM at Aug 1600	**10632** CFM	Leaving DB / WB	**52.0 / 50.5** °F
Max block CFM at Aug 1600	**10787** CFM	Coil ADP	**48.9** °F
Sum of peak zone CFM	**11389** CFM	Bypass Factor	**0.100**
Sensible heat ratio	**0.841**	Resulting RH	**43** %
ft²/Ton	**409.7**	Design supply temp.	**55.0** °F
BTU/(hr-ft²)	**29.3**	Zone T-stat Check	**25 of 25** OK
Water flow @ 10.0 °F rise	**75.29** gpm	Max zone temperature deviation	**0.0** °F

Supply Fan Sizing Data

Actual max CFM at Aug 1600	**10787** CFM	Fan motor BHP	**14.14** BHP
Standard CFM	**10776** CFM	Fan motor kW	**10.55** kW
Actual max CFM/ft²	**0.84** CFM/ft²	Fan static	**4.00** in w.g.

Outdoor Ventilation Air Data

Design airflow CFM	**1250** CFM	CFM/person	**26.15** CFM/person
CFM/ft²	**0.10** CFM/ft²		

The following is a design load summary for the first floor Jacksonville air handling unit. This HAP output provides loads due to heat transfer through walls, windows, the roof and loads created by people, equipment and lighting. Table B-1 tabulates this data for both design cooling and heating conditions. Table B-2 is the design load summary for the second floor Jacksonville air handling unit.

Table B-1. First floor air handling unit design load summary for Jacksonville.

	DESIGN COOLING			**DESIGN HEATING**		
	COOLING DATA AT Jul 1600 COOLING OA DB / WB 93.5 °F / 76.9 °F			**HEATING DATA AT DES HTG HEATING OA DB / WB 29.0 °F / 24.4 °F**		
ZONE LOADS	**Details**	**Sensible (BTU/hr)**	**Latent (BTU/hr)**	**Details**	**Sensible (BTU/hr)**	**Latent (BTU/hr)**
Window & Skylight Solar Loads	3528 ft²	66149	-	3528 ft²	-	-
Wall Transmission	2830 ft²	3737	-	2830 ft²	14988	-
Roof Transmission	0 ft²	0	-	0 ft²	0	-
Window Transmission	3528 ft²	31482	-	3528 ft²	82438	-
Skylight Transmission	0 ft²	0	-	0 ft²	0	-
Door Loads	25 ft²	590	-	25 ft²	582	-
Floor Transmission	12754 ft²	0	-	12754 ft²	16592	-
Partitions	992 ft²	4434	-	992 ft²	0	-
Ceiling	0 ft²	0	-	0 ft²	0	-
Overhead Lighting	21637 W	34900	-	0	0	-
Task Lighting	1350 W	4606	-	0	0	-
Electric Equipment	11479 W	37298	-	0	0	-
People	44	8810	9948	0	0	0
Infiltration	-	0	0	-	0	0
Miscellaneous	-	0	0	-	0	0
Safety Factor	0% / 0%	0	0	0%	0	0
>> Total Zone Loads	**-**	**192005**	**9948**	**-**	**114600**	**0**
Zone Conditioning	-	215513	9948	-	99365	0
Plenum Wall Load	32%	4522	-	0	0	-
Plenum Roof Load	0%	0	-	0	0	-
Plenum Lighting Load	45%	33222	-	0	0	-
Return Fan Load	10512 CFM	0	-	8400 CFM	0	-
Ventilation Load	1250 CFM	21598	49980	1250 CFM	48249	0
Supply Fan Load	10512 CFM	34623	-	8400 CFM	-20824	-
Space Fan Coil Fans	-	341	-	-	-6419	-
Duct Heat Gain / Loss	0%	0	-	0%	0	-
>> Total System Loads	**-**	**309819**	**59928**	**-**	**120372**	**0**
Central Cooling Coil	-	310807	59948	-	-61189	0
Terminal Reheat Coils	-	-991	-	-	181549	-
>> Total Conditioning	**-**	**309816**	**59948**	**-**	**120360**	**0**

Tables B-3 through B-7 are the annual energy costs of each Florida City for the case-study building with each HRD applied. All five of these tables are output from the HAP model. In each city the building was run with and without an HRD and the data for all six scenarios can be compiled into one table to assess the savings associated with each HRD due to cooling.

Table B-2. Second floor air handling unit design load summary for Jacksonville.

	DESIGN COOLING			**DESIGN HEATING**		
	COOLING DATA AT Aug 1600 COOLING OA DB / WB 93.5 °F / 76.9 °F			**HEATING DATA AT DES HTG HEATING OA DB / WB 29.0 °F / 24.4 °F**		
ZONE LOADS	**Details**	**Sensible (BTU/hr)**	**Latent (BTU/hr)**	**Details**	**Sensible (BTU/hr)**	**Latent (BTU/hr)**
Window & Skylight Solar Loads	3552 ft²	66789	-	3552 ft²	-	-
Wall Transmission	2682 ft²	2049	-	2682 ft²	10915	-
Roof Transmission	12827 ft²	3028	-	12827 ft²	25932	-
Window Transmission	3552 ft²	31704	-	3552 ft²	83020	-
Skylight Transmission	0 ft²	0	-	0 ft²	0	-
Door Loads	0 ft²	0	-	0 ft²	0	-
Floor Transmission	0 ft²	0	-	0 ft²	0	-
Partitions	642 ft²	2416	-	642 ft²	0	-
Ceiling	0 ft²	0	-	0 ft²	0	-
Overhead Lighting	20356 W	32920	-	0	0	-
Task Lighting	952 W	3248	-	0	0	-
Electric Equipment	11560 W	37563	-	0	0	-
People	47	9064	9607	0	0	0
Infiltration	-	0	0	-	0	0
Miscellaneous	-	0	0	-	0	0
Safety Factor	0% / 0%	0	0	0%	0	0
>> Total Zone Loads	**-**	**188782**	**9607**	**-**	**119867**	**0**
Zone Conditioning	-	215679	9607	-	90475	0
Plenum Wall Load	32%	3616	-	0	0	-
Plenum Roof Load	70%	7065	-	0	0	-
Plenum Lighting Load	45%	31254	-	0	0	-
Return Fan Load	10632 CFM	0	-	8900 CFM	0	-
Ventilation Load	1250 CFM	21267	50069	1250 CFM	47304	0
Supply Fan Load	10632 CFM	34949	-	8900 CFM	-23393	-
Space Fan Coil Fans	-	719	-	-	-5199	-
Duct Heat Gain / Loss	0%	0	-	0%	0	-
>> Total System Loads	**-**	**314549**	**59676**	**-**	**109187**	**0**
Central Cooling Coil	-	316538	59707	-	-63253	0
Terminal Reheat Coils	-	-1991	-	-	172413	-
>> Total Conditioning	**-**	**314547**	**59707**	**-**	**109160**	**0**

Table B-3. Tallahassee annual cost for the case study with and without each HRD.

Component	FPL Office ($)	FPL Office (HeatPipe) ($)	FPL Office (Membrane) ($)	FPL Office (Plate) ($)	FPL Office (Wheel) ($)
Air System Fans	4,114	4,158	4,273	4,221	4,308
Cooling	11,472	11,384	10,806	11,383	10,817
Heating	3,264	3,263	3,263	3,263	3,263
Pumps	1,519	1,517	1,515	1,518	1,515
Cooling Tower Fans	0	0	0	0	0
HVAC Sub-Total	**20,369**	**20,323**	**19,857**	**20,385**	**19,902**
Lights	11,014	11,000	10,982	11,003	10,983
Electric Equipment	23,655	23,627	23,587	23,632	23,589
Misc. Electric	0	0	0	0	0
Misc. Fuel Use	0	0	0	0	0
Non-HVAC Sub-Total	**34,669**	**34,627**	**34,570**	**34,635**	**34,572**
Grand Total	**55,037**	**54,950**	**54,427**	**55,020**	**54,474**

Table B-4. Jacksonville annual cost for the case study with and without each HRD.

Component	FPL Office ($)	FPL Office (HeatPipe) ($)	FPL Office (Membrane) ($)	FPL Office (Plate) ($)	FPL Office (Wheel) ($)
Air System Fans	4,141	4,187	4,304	4,253	4,341
Cooling	11,745	11,654	11,055	11,653	11,065
Heating	2,690	2,689	2,689	2,690	2,689
Pumps	1,512	1,511	1,507	1,511	1,507
Cooling Tower Fans	0	0	0	0	0
HVAC Sub-Total	**20,089**	**20,041**	**19,555**	**20,106**	**19,603**
Lights	10,965	10,952	10,926	10,954	10,927
Electric Equipment	23,551	23,521	23,464	23,527	23,466
Misc. Electric	0	0	0	0	0
Misc. Fuel Use	0	0	0	0	0
Non-HVAC Sub-Total	**34,516**	**34,472**	**34,390**	**34,481**	**34,393**
Grand Total	**54,604**	**54,513**	**53,945**	**54,587**	**53,996**

Table B-5. Tampa annual cost for the case study with and without each HRD.

Component	FPL Office ($)	FPL Office (HeatPipe) ($)	FPL Office (Membrane) ($)	FPL Office (Plate) ($)	FPL Office (Wheel) ($)
Air System Fans	4,182	4,239	4,370	4,318	4,411
Cooling	12,416	12,316	11,644	12,316	11,656
Heating	1,595	1,595	1,593	1,595	1,593
Pumps	1,495	1,493	1,490	1,494	1,490
Cooling Tower Fans	0	0	0	0	0
HVAC Sub-Total	**19,688**	**19,643**	**19,096**	**19,722**	**19,150**
Lights	10,835	10,825	10,802	10,829	10,804
Electric Equipment	23,268	23,246	23,197	23,254	23,199
Misc. Electric	0	0	0	0	0
Misc. Fuel Use	0	0	0	0	0
Non-HVAC Sub-Total	**34,103**	**34,072**	**33,999**	**34,083**	**34,003**
Grand Total	**53,791**	**53,715**	**53,095**	**53,806**	**53,153**

Table B-6. Orlando annual cost for the case study with and without each HRD.

Component	FPL Office ($)	FPL Office (HeatPipe) ($)	FPL Office (Membrane) ($)	FPL Office (Plate) ($)	FPL Office (Wheel) ($)
Air System Fans	4,131	4,192	4,318	4,276	4,361
Cooling	12,609	12,497	11,790	12,497	11,804
Heating	1,500	1,499	1,497	1,499	1,497
Pumps	1,498	1,497	1,493	1,497	1,493
Cooling Tower Fans	0	0	0	0	0
HVAC Sub-Total	**19,738**	**19,685**	**19,098**	**19,770**	**19,154**
Lights	10,864	10,850	10,821	10,854	10,823
Electric Equipment	23,331	23,301	23,239	23,310	23,243
Misc. Electric	0	0	0	0	0
Misc. Fuel Use	0	0	0	0	0
Non-HVAC Sub-Total	**34,194**	**34,151**	**34,060**	**34,164**	**34,065**
Grand Total	**53,933**	**53,836**	**53,158**	**53,935**	**53,219**

The HAP data shown in Table B-8 are the results for the CO_2 controls with the compared reference case that uses the changed operating schedule. Table B-8 is the Jacksonville annual energy cost associated with the new reference case using evening operation and the same case using CO_2 ventilation controls.

Table B-7. Miami annual cost for the case study with and without each HRD.

Component	FPL Office ($)	FPL Office (HeatPipe) ($)	FPL Office (Membrane) ($)	FPL Office (Plate) ($)	FPL Office (Wheel) ($)
Air System Fans	4,253	4,331	4,464	4,435	4,513
Cooling	13,434	13,329	12,417	13,330	12,434
Heating	857	856	852	857	853
Pumps	1,492	1,491	1,484	1,492	1,484
Cooling Tower Fans	0	0	0	0	0
HVAC Sub-Total	**20,035**	**20,008**	**19,218**	**20,113**	**19,283**
Lights	10,816	10,810	10,759	10,815	10,761
Electric Equipment	23,230	23,216	23,107	23,228	23,111
Misc. Electric	0	0	0	0	0
Misc. Fuel Use	0	0	0	0	0
Non-HVAC Sub-Total	**34,046**	**34,026**		**34,043**	**33,873**
Grand Total	**54,081**	**54,034**	**53,084**	**54,157**	**53,156**

Table B-8. Jacksonville annual cost for the changed operating schedule with and without CO_2 controls.

Component	FPL Office(1820) ($)	FPL Office(CO2) ($)
Air System Fans	5,629	5,638
Cooling	17,238	16,814
Heating	3,651	3,650
Pumps	3,571	3,576
Cooling Tower Fans	0	0
HVAC Sub-Total	**30,089**	**29,679**
Lights	10,025	10,039
Electric Equipment	21,529	21,561
Misc. Electric	0	0
Misc. Fuel Use	0	0
Non-HVAC Sub-Total	**31,554**	**31,600**
Grand Total	**61,643**	**61,279**

To determine the savings with the spreadsheet the psychrometric data for each hour and each city was produced. A sample section of this data is shown in Table B-9. This is the data for Tallahassee on January 1st. This table had to be reformatted from the spreadsheet due differences in margins. The spreadsheet formats are considerably neater. The column providing the temperatures in Rankine had to be deleted for formatting issues.

Table B-9. Tallahassee psychrometric data for January 1st.

1-Jan	Dry Bulb	Wet Bulb	$P_{ws}(t^*)$	W_s^*	W	$P_{ws}(t)$	W_s	U	RH	V	H	P_w	T_d
Hour	(F)	(F)	(psia)			(psia)			(%)	(ft^3/lb_{da})	(Btu/lb_{da})	(psia)	(F)
0	42.9	41.1	0.127	0.005	0.005	0.136	0.006	0.862	86.3	12.8	15.7	0.118	39.1
100	39.3	35.6	0.102	0.004	0.004	0.118	0.005	0.699	70.0	12.7	13.2	0.083	30.3
200	38	34.6	0.098	0.004	0.003	0.113	0.005	0.714	71.6	12.6	12.8	0.081	29. 6
300	37.1	34	0.096	0.004	0.003	0.109	0.005	0.733	73.4	12.6	12.6	0.080	29.3
400	36	33.2	0.093	0.004	0.003	0.104	0.004	0.752	75.3	12.6	12.2	0.078	28.9
500	34.1	31.9	0.088	0.004	0.003	0.096	0.004	0.794	79.5	12.5	11.7	0.077	28.3
600	31.9	30.2	0.082	0.003	0.003	0.088	0.004	0.823	82.4	12.5	11.0	0.073	27.0
700	32.9	30.8	0.084	0.004	0.003	0.092	0.004	0.792	79.3	12.5	11.230	0.073	27.1
800	37	33.7	0.095	0.004	0.003	0.108	0.005	0.716	71.7	12.6	12.437	0.078	28.6
900	41	36.5	0.106	0.005	0.004	0.127	0.005	0.650	65.2	12.7	13.628	0.082	30.1
1000	44.3	38.4	0.114	0.005	0.004	0.144	0.006	0.578	58.0	12.8	14.5	0.083	30.4
1100	47	39.6	0.120	0.005	0.003	0.159	0.007	0.506	50.9	12.8	15.007	0.081	29.7
1200	49.7	40.8	0.126	0.005	0.003	0.176	0.008	0.444	44.7	13.0	15.6	0.079	29.0
1300	51.7	41.7	0.130	0.006	0.003	0.190	0.008	0.405	40.8	13.0	16.0	0.077	28.6
1400	53.1	42.4	0.134	0.006	0.003	0.200	0.009	0.384	38.7	13.0	16.3	0.077	28.5
1500	54.4	43.1	0.137	0.006	0.003	0.209	0.009	0.368	37.1	13.0	16.7	0.078	28.7
1600	52.2	42.2	0.133	0.006	0.003	0.193	0.008	0.411	41.4	13.0	16.2	0.080	29.4
1700	46.5	39.6	0.120	0.005	0.004	0.156	0.007	0.532	53.5	12.8	15.0	0.084	30.5
1800	40.8	36.8	0.107	0.005	0.004	0.126	0.005	0.686	68.8	12.7	13.8	0.086	31.3
1900	36.8	34.5	0.098	0.004	0.004	0.107	0.005	0.799	80.0	12.6	12.8	0.086	31.2
2000	34.4	32.3	0.090	0.004	0.003	0.098	0.004	0.805	80.6	12.5	11.9	0.079	29.0
2100	32.1	30.1	0.081	0.003	0.003	0.089	0.004	0.794	79.54	12.5	11.0	0.071	26.3
2200	30.6	28.6	0.076	0.003	0.003	0.083	0.004	0.785	78.6	12.4	10.3	0.065	24.4
2300	30.1	28.2	0.074	0.003	0.003	0.081	0.003	0.792	79.3	12.4	10.2	0.064	24.0

Table B-10 illustrates a page in the spreadsheet that logs the consumption and demand values from the savings page to determine total savings and calculate a simple payback. This table is set up for the membrane HRD in Tallahassee. Table B-11 is a section of the savings page of the Tallahassee spreadsheet. All the numbers that are in double lined boxes are variables and can be changed for different HRD systems. The static pressure that must be overcome by the fan must be doubled to account for both fans.

Table B-10. Tallahassee membrane savings and payback table.

Savings	Max kW per month		Total kWh per month		System Peak kW Reduction
Tallahassee, Florida	Cooling	Heating	Cooling	Heating	
January	1.15	46.6	-983	2.57 E+03	38.8
February	0.23	34.1	-1.25 E+03	2.34 E+03	32.8
March	4.47	28.5	-763	1.04 E+03	24.1
April	3.79	26.2	-436	205	3.73
May	9.09	17.5	649	74.0	8.38
June	11.1	0	1.26 E+03	0	11.1
July	10.4	0	2.12 E+03	0	8.44
August	10.4	0	1.95 E+03	0	8.74
September	8.49	0	1.33 E+03	0	7.07
October	5.35	16.3	-34.21	47.0	5.35
November	3.32	37.9	-948	1.42 E+03	36.6
December	3.29	40.9	-940	2.51 E+03	34.3

	Total kWh Cooling	Heating	Total
	1,950	10,210	12,160
Energy Save	$ Saving=>	$ 0.0428	$ 521
Total Demand	247	$ 8.16	$ 2,010
	$ Saving Total===>		**$ 2,531**
Systems kW Peak Summer 4pm =>			11.1
Systems kW Peak Winter 8am =>			38.8
Cost System	$ 3.50	per cfm	$ 8,750
Installation	$ 2.00	per cfm	$ 5,000
	Total Cost ===>		**$ 13,750**
	Payback =====>		**5.4 Years**

Table B-11. Tallahassee sample data of the consumption and demand values associated with a membrane HRD.

ERV Efficiency (%)	70	Exhaust Air	T_{db} (F)	T_{wb} (F)	H (Btu/lb_{da})	Fan Effic.	0.6	Bypass Mode	0	1=On 0=Off
Air Flow (cfm)	2500	Cooling	75	63	28.4321	Motor Effic.	0.9			
Air Density (lb/ft^3)	0.075	Heating	70	58	25.0059	Static Press.	2	Aux. Power	1	1=Fan 0=Other
Balance Point (F)	50							Other Power	0	kW
Cooling (kW/ton)	1.165		**Outdoor**	**Supply**		**Tons of Savings**				
Heating (kW/ton)	3.516			**Cooling**	**Heating**					
1-Jan	**Dry Bulb**	**Wet Bulb**	**H**	**H**	**H**	**Cooling**	**Heating**	**Cooling**	**Heating**	**System**
Hour	**(F)**	**(F)**	**(Btu/lbda)**	**(Btu/lb_{da})**	**(Btu/lb_{da})**	**(tons)**	**(tons)**	**(kWh)**	**(kWh)**	**Peak (kW)**
0	42.9	41.1	15.7	24.6	22.2	0.000	6.10	0.000	0.000	
100	39.3	35.6	13.2	23.9	21.5	0.000	7.72	0.000	0.000	
200	38	34.6	12.8	23.7	21.3	0.000	8.00	0.000	0.000	
300	37.1	34	12.6	23.7	21.3	0.000	8.17	0.000	0.000	
400	36	33.2	12.2	23.6	21.2	0.000	8.38	0.000	0.000	
500	34.1	31.9	11.7	23.4	21.0	0.000	8.74	0.000	29.6	
600	31.9	30.2	11.0	23.2	20.8	0.000	9.20	0.000	31.2	
700	32.9	30.8	11.2	23.3	20.9	0.000	9.04	0.000	30.6	
800	37	33.7	12.4	23.6	21.2	0.000	8.25	0.000	27.8	27.8
900	41	36.5	13.6	24.0	21.6	0.000	7.47	0.000	25.1	
1000	44.3	38.4	14.5	24.2	21.8	0.000	6.92	0.000	23.2	
1100	47	39.6	15.0	24.4	22.0	0.000	6.56	0.000	21.9	
1200	49.7	40.8	15.6	24.6	22.2	0.000	6.20	0.000	20.7	
1300	51.7	41.7	16.0	24.7	22.3	-8.17	0.000	-10.6	0.000	
1400	53.1	42.4	16.3	24.8	22.4	-7.95	0.000	-10.4	0.000	
1500	54.4	43.1	16.6	24.9	22.5	-7.73	0.000	-10.1	0.000	
1600	52.2	42.2	16.2	24.8	22.4	-8.02	0.000	-10.5	0.000	
1700	46.5	39.6	15.0	24.4	22.0	0.000	6.56	0.000	21.9	
1800	40.8	36.8	13.8	24.0	21.6	0.000	7.38	0.000	24.8	
1900	36.8	34.5	12.8	23.7	21.3	0.000	8.03	0.000	0.000	
2000	34.4	32.3	11.9	23.5	21.1	0.000	8.63	0.000	0.000	

LIST OF REFERENCES

American National Standard Institue/American Society of Heating, Refrigeration and Air-Conditioning Engineers (ANSI/ASHRAE), 2001, Ventilation for Acceptable Indoor Air Quality, Standard 62-2001. ASHRAE STANDARD.

Carrier Corporation, 2002, HAP Quick Reference Guide. Carrier Software Systems Network, USA.

Crowther H, December 2001, "Enthalpy Wheel for Energy Recovery," HPAC Engineering, pp. 39-55.

Mahon H, Kiss M, Leimer H, 1983, Efficient Energy Management, Prentice-Hall, Englewood Cliffs, New Jersey, pp. 325-336.

Mathur G, 2000, "Controlling Space Humidity with Heat-Pipe exchangers," 35th Intersociety Energy Conversion Engineering Conference, The American Institute of Aeronautics and Astronautics, Las Vegas, NV, vol. 2, pp. 835-842.

Wellford B, October 2002, "O&M for Enthalpy-Recovery systems," HPAC Engineering, pp. 58-59.

Wellford B, August 2002, "Sizing and Selecting Enthalpy-Recovery Ventilation Systems," HPAC Engineering, pp. 50-52.

Schell M, Int-Hout D, Feb. 2001, "Demand Control Ventilation using CO_2," ASHRAE Journal, vol. 43, pp. 18-29.

Shao L, Riffat S, Gan G, 1998,"Heat Recovery with Low Pressure Loss for Natural Ventilation," Energy and Buildings, vol. 28, pp. 179-184.

Zhang Y, Jiang Y, Zhang L, Deng Y, Jin Z, 2000, "Analysis of Thermal Performance and Energy Savings of Membrane based Heat Recovery Ventilator," Energy, vol. 25, pp. 515-527.

BIOGRAPHICAL SKETCH

Patrick William Johns was born in Florida in 1979. While residing in Ocala he received his A.A. from Central Florida Community College in 1997. In the fall of 1999, he entered the Mechanical Engineering Department of the University of Florida. In 2001 he completed his B.S.M.E. He enrolled as a graduate student at the University of Florida in spring of 2002.