MASS SYNTHESIS FOR MULTIPLE BALANCING CRITERIA OF COMPLEX, PLANAR MECHANISMS

by

JOHN L. ELLIOTT

A DISSERTATION PRESENTED TO THE GRADUATE COUNCIL OF
THE UNIVERSITY OF FLORIDA
IN PARTIAL FULFILLMENT OF THE REQUIREMENTS FOR THE
DEGREE OF DOCTOR OF PHILOSOPHY

UNIVERSITY OF FLORIDA

1980

ACKNOWLEDGEMENTS

Firstly, the author would like to express his appreciation for the guidance and support of Professor Delbert Tesar throughout his graduate career. Secondly, he would like to thank the members of his committee for the assistance that they have rendered in his pursuit of an education. He would also like to thank Dr. Dennis Riddle and Professor Gary Matthew and their wives for the encouragement in this undertaking. Lastly, he would like to express his appreciation to Keilah Matthew for her kind persistence in the preparation of this dissertation.

TABLE OF CONTENTS

LIST OF TABLES

LIST OF FIGURES

Abstract of Dissertation Presented to the
Graduate Council of the University of Florida
in Partial Fulfillment of the Requirements for the
Degree of Doctor of Philosophy

MASS SYNTHESIS FOR MULTIPLE BALANCING CRITERIA OF
COMPLEX, PLANAR MECHANISMS

By

John L. Elliott

June, 1980

Chairman: Delbert Tesar
Major Department: Mechanical Engineering

This dissertation explores the general area of the balancing of complex, planar mechanisms. Methods are developed for the theoretical balancing for the dynamic properties of any balanceable mechanism. The dynamic properties directly covered are kinetic energy, inertia driving torque, inertia power, linear momentum, shaking force, total angular momentum, shaking moment, and rocking moment of the mechanism.

The objective of this work is to develop a method for the closed form determination of the mass parameters and mass content of a mechanism to satisfy some specified balancing condition, either zero or non-zero. The development of such a method for balancing mechanisms would possibly lead to the improved performance of mechanisms as machine components through improvement of their non-linear dynamic properties. The specific problem addressed is the development of an expression for each of the dynamic properties in a linearly independent form. Once this is accomplished, then the components of this expression could be used for the closed form balancing of a mechanism.

This work builds on the method of linearly independent vectors for shaking force balancing as developed by Lowen et al., and previous work by the author. A matrix formulation of the dynamic properties of the

planar mechanism is developed and is used to remove the linear dependencies of the expressions for the dynamic properties of the general planar linkage. Once this has been done, the balancing conditions for the mechanism become apparent and balancing may be carried out in a straight-forward manner. These linear dependencies are eliminated through the use of algebra and simple planar geometry.

This work provides a simple method of developing the equations for the dynamic properties of planar mechanisms by simple algebraic substitution. The balancing conditions for the mechanism are derived from this equation in its reduced, linearly independent form. Predictors for the number of terms to be expected in this reduced form of the equation are presented. A theorem which definitely eliminates certain mechanisms from the possibility of complete balancing is included.

The method of balancing developed is applicable to any planar mechanism including pin-joints, sliding pairs and gear pairs. The underlying assumptions are that the kinematic description of the linkage exists and that some method for the dynamic analysis of the mechanism is available to a user attempting to balance for a specific set of non-zero values for the dynamic property.

Two examples are included. The first is an eight-bar which includes a ternary. The balancing equation for kinetic energy and driving torque due to inertia is developed. The second is a five-bar linkage. This mechanism is balanced for shaking force and shaking moment. The mechanism is analyzed before and after balancing to determine the effect of balancing for one property on the other dynamic properties of the mechanism. Computer programs for use and balancing mechanisms are contained in an appendix.

CHAPTER ONE

INTRODUCTION

1.1 Purpose

Mechanisms are non-linear devices. As such they exhibit non-linear dynamic properties. The energy content and momentum of mechanisms vary not only with their speed of operation but also with their position. This means that mechanisms exert varying forces and moments on their surroundings, which makes it difficult to predict the dynamic response of a mechanism and to size the bearings and prime movers to be used with mechanisms as machine components. If mechanisms could be designed to operate more smoothly, they would be more acceptable as machine components. It is the purpose of this dissertation to present a general method for the balancing of planar mechanisms by mass addition or redistribution to assure smoothness of operation.

1.2 Dynamic Properties

Principal dynamic properties of mechanisms include their kinetic energy, linear momentum, total momentum, the rocking moment exerted by the machine on its foundation, and the associated derivatives of these properties. Direct control of these properties would allow better design of machines and their components. Control of the energy content of a mechanism would allow firstly the reduction in fluctuation in order to put fewer demands on commonly available prime movers and secondly the adjustment of the shape of the input energy or torque curve requirement to suit

an available non-standard prime mover such as a spring. Since the shaking force of a mechanism is the first time derivative of the linear momentum of a mechanism, the direct control of linear momentum would make feasible a reduction in the shaking force which a mechanism exerted on its foundation for control of vibration. The control of the rocking moment that a mechanism exerts on its foundation would allow control of vibration and noise for the same reasons of smoothness of operation of the whole system.

1.3 Balancing

Balancing of mechanisms in this work will be defined as the ability to distribute or redistribute the mass parameters of the links of a mechanism to satisfy certain prescribed conditions. The mass parameters of a mechanism are the mass of each link, the moment of inertia of each link about its center of gravity and the location of the center of gravity of each link in a reference frame attached to the link. Thus there are four mass parameters associated with each moving link of a mechanism.

1.4 Recent History

Since the author's thesis [9] was finished in 1976, there have been several researchers active in the field of study which is the subject of this dissertation. Most of the research that has been carried on has been of an iterative nature only. There have, however, been contributions to the field of closed form balancing of mechanisms during that time. Bagci [1] derived the complete balancing conditions for the shaking force of the slider-crank and there is good agreement between his work and the work in [9]. He and Balasubramanian combined [2] to derive the complete shaking force balancing conditions for the common six-bar revolute linkages and the six-bars with one slider at ground.

In England, Walker and Oldham [27] developed from "the method of linearly independent vectors" of Berkof and Lowen [5], the shaking force balancing conditions for an open chain and showed that under the conditions that the free end is fixed to ground the force balancing of various mechanisms is obtained. This method is applicable to the general complex mechanism. It is possible to derive the balancing conditions for any of the dynamic properties of linkages using the method that Walker and Oldham used, but this appears to be more tedious than the approach used in this work. In a later paper [28], these authors again collaborated to determine whether a linkage could be fully force balanced, using the theorem of Tepper and Lowen [26], to determine the minimum number of counterweights necessary to balance a given linkage and the optimum placement of the counterweights in the linkage, the selection of the "best" link for the placement of the counterweights.

In 1978, Elliott, Tesar, and Matthew [11] explained a method for the partial balancing of any mechanism. That paper was restricted to the balancing (redistribution of mass) of a single coupler link since no attempt was made to eliminate the linear dependence of the vector description of the dynamic properties of the mechanism. This work, as well as the previous works by the author [9] and [10], is limited in that there has been no development of the required and allowable balancing conditions. Hence, the designer is restricted in a sense to the iterative application of the balancing conditions followed by analysis to determine if other properties of the mechanism have been negatively affected. The reader is referred to the works [6] and [15] by Berkof and Lowen for what may be an appropriate predictor technique as an aid to the designer. This work was originally done for use in prediction of the allowable and desirable

balancing conditions for the shaking moment of the four-bar with constant speed input that had been previously shaking force balanced. That these conditions are required for the complete shaking moment balancing of any four-bar has been amply demonstrated in [9]. The prediction graphs that have been developed [6] and [15] can be used since one of the other interesting results of the previous work by the author was the demonstration (as is pointed out by Berkof [4]) that the torque balancing conditions are satisfied if the shaking moment conditions are first satisfied (with the unfortunate requirement that negative inertia be provided). The important point to note here is that the inertia driving torque of the mechanism will be greatly reduced if one constructs the mechanism so that the centers of mass of the links of the mechanism lie on the center-lines of the links. Then it becomes obvious that the prediction technique developed by Berkof and Lowen for shaking moment may be extended to the balancing of more complex mechanisms even though it was originally done for a special class of mechanism.

In 1968, Ogawa and Funabashi [19] balanced a spatial mechanism for inertia driving torque. Their paper was a combination of theoretical work and experimental analysis to substantiate the theory. Two of the methods that were used in the balancing of the mechanism were reasonably well known: the additions of balancing dyads (auxiliary mechanism) and harmonic balancing using planetary gears. It should be noted that balancing using planetary gears had been attempted previously in order to control the shaking force and shaking moment of the mechanism rather than the inertia driving torque.

Carson and Stephens [7] present optimization criteria for the balancing of in-line four-bar linkages. These criteria define usable links

in that the radii of gyration of the links are related to the lengths of the links of the mechanism. Equations, graphs and monographs are presented so that the designer may determine if "real" links can be expected from a mechanism which has been shaking force balanced and root-mean-square shaking moment balanced.

Paul [20] presents a good summary of the balancing techniques available until 1978. These include balancing for harmonics, the method of shaking force balancing used by Berkof and Lowen [5] and an explanation and extension of a method of sizing a flywheel that was put forth by Wittenbauer in 1923. Paul's text deals mainly with the analysis and dynamics of mechanisms. A good description of Lagrangian mechanics is presented on a basic level.

CHAPTER TWO

DERIVATION

2.1 Purpose

As was explained in Chapter One, most of the balancing methods that have been used in the past have been either methods of approximation (mathematical or graphical) or methods of total balancing as applied to special configurations of mechanisms. These methods have required a complete understanding of the mechanism to be balanced. By contrast, a completely general method of balancing planar mechanisms will be presented in this dissertation. The general form of the equations for the balanceable dynamic properties of mechanisms will be derived in this chapter.

The work that will follow presumes that the description of the mechanism exists. That is, that the lengths and the orientations of the links of the mechanism are known. These may be from an existing mechanism or be the result of some synthesis on the part of the designer (see Ref. [12], [24] and [25]). It is possible to balance a mechanism if the mass parameters of the system are known, but this is not necessary. It is also presumed that a relatively efficient program for kinematic or dynamic analysis is available, such as that in Ref. [21]. Before any balancing for non-zero dynamic properties is attempted, the mechanism must first be analyzed and the data made available for use in the dynamic equations for balancing to be presented in this chapter.

2.2 Coordinate Systems

In the derivations to follow, a special notation and set of coordinate systems will be used. A fixed coordinate system (see Fig. 2.2.1) will be used to trace the motion of a point, p. This point will be designated with the letter pair (U_r, V_r). Each moving link will have attached to it a moving coordinate system. All of the dimensions of points located in the moving reference system will be presumed to be constant. A point fixed to the moving reference system will be designated with the letter pair (u_r, v_r). An attempt will be made always to fix the origin of the moving reference system to some point in a link whose motion (U_p, V_p) in the fixed reference system is known. These special reference systems will be used in order to continually remind the reader that the object of the work presented here is to synthesize the mass parameters in the moving reference system.

2.3 Basic Transformations

The work to follow will consist of the transformation of the classic equation for some dynamic property of a link to two unique forms. In order to accomplish this, the motion transformations for the position and velocity of a point will be needed (as well as the representation of the rotation of a link) in terms of other known motion parameters. These transformations will be given here for compactness of presentation.

Consider the representation of a link undergoing coplanar motion (Fig. 2.2.1). Points p and q are two points in the link whose motion, position and velocity, are known (U_p, V_p, $\dot{U}_p$, $\dot{V}_p$, U_q, V_q, $\dot{U}_q$, $\dot{V}_q$). The angular motion of the link is also known as γ_{pq}, $\dot{\gamma}_{pq}$. A third point, r, is located in the moving coordinate system attached to point p with the fixed dimensions u_r and v_r.

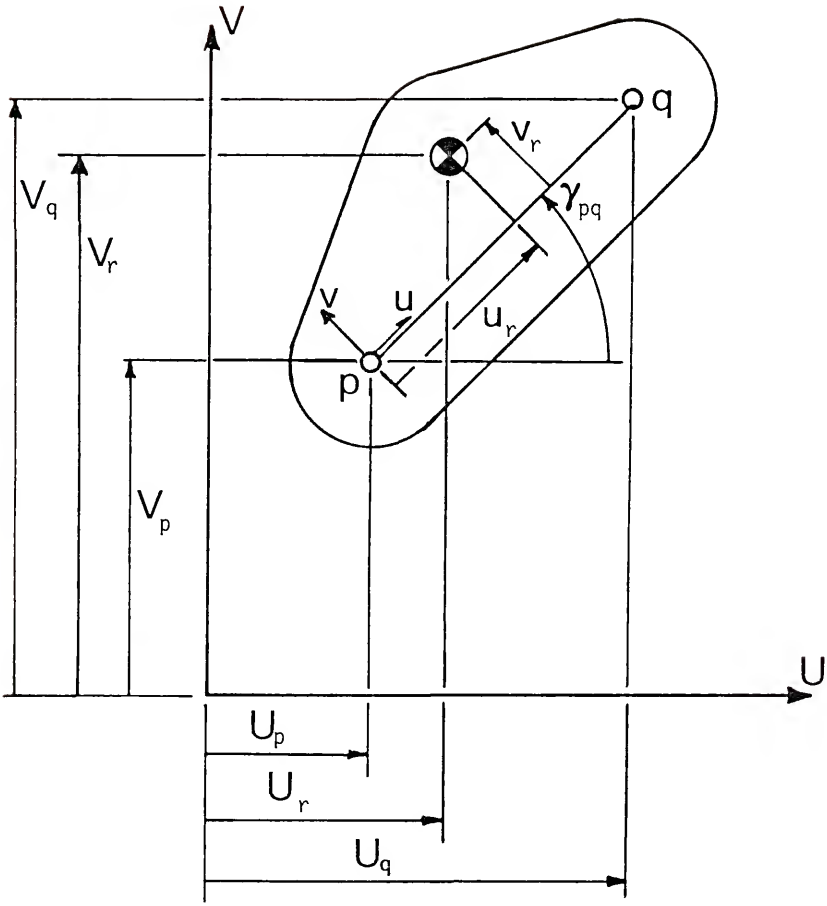

FIG. 2.2.1 General Link

Point q can be located relative to p with the following transform:

$$U_q = U_p + a_{pq}\cos\gamma_{pq}, \qquad (2.3.1)$$
$$V_q = V_p + a_{pq}\sin\gamma_{pq}.$$

The derivatives with respect to time of these functions yield

$$\dot{U}_q = \dot{U}_p - a_{pq}\sin\gamma_{pq}\dot{\gamma}_{pq}, \qquad (2.3.2)$$
$$\dot{V}_q = \dot{V}_p + a_{pq}\cos\gamma_{pq}\dot{\gamma}_{pq}.$$

The first pair of equations can be solved for $\cos\gamma_{pq}$ and $\sin\gamma_{pq}$ to yield

$$\cos\gamma_{pq} = (U_q - U_p)/a_{pq}, \qquad (2.3.3)$$
$$\sin\gamma_{pq} = (V_q - V_p)/a_{pq}$$

with their time derivatives as

$$-\sin\gamma_{pq}\dot{\gamma}_{pq} = (\dot{U}_q - \dot{U}_p)/a_{pq}, \qquad (2.3.4)$$
$$\cos\gamma_{pq}\dot{\gamma}_{pq} = (\dot{V}_q - \dot{V}_p)/a_{pq}.$$

Equations (2.3.4) can be squared and added to give

$$\dot{\gamma}^2_{pq} = \dot{\gamma}^2_{pq}(\cos^2\gamma_{pq} + \sin^2\gamma_{pq}) = [(\dot{U}_q - \dot{U}_p)^2 + (\dot{V}_q - \dot{V}_p)^2]/a^2_{pq}. \qquad (2.3.5)$$

If Eqs. (2.3.4) are multiplied by $-\sin\gamma_{pq}$ and $\cos\gamma_{pq}$ and added the result is

$$\dot{\gamma}_{pq} = \dot{\gamma}_{pq}(\cos^2\gamma_{pq} + \sin^2\gamma_{pq}) = [-\sin\gamma_{pq}(\dot{U}_q - \dot{U}_p) + \cos\gamma_{pq}(\dot{V}_q - \dot{V}_p)]/a_{pq}.$$

This equation can be made more useful if Eqs. (2.3.3) are substituted for $\sin\gamma_{pq}$ and $\cos\gamma_{pq}$

$$\dot{\gamma}_{pq} = [(U_q - U_p)(\dot{V}_q - \dot{V}_p) - (V_q - V_p)(\dot{U}_q - \dot{U}_p)]/a^2_{pq}. \qquad (2.3.6)$$

The position of r in the fixed coordinate system is given as

$$U_r = U_p + u_r\cos\gamma_{pq} - v_r\sin\gamma_{pq}, \tag{2.3.7}$$
$$V_r = V_p + u_r\sin\gamma_{pq} + v_r\cos\gamma_{pq}.$$

The time derivatives of these equations are

$$\dot{U}_r = \dot{U}_p - (u_r\sin\gamma_{pq} + v_r\cos\gamma_{pq})\dot{\gamma}_{pq}, \tag{2.3.8}$$
$$\dot{V}_r = \dot{V}_p + (u_r\cos\gamma_{pq} - v_r\sin\gamma_{pq})\dot{\gamma}_{pq}.$$

Substitution of Eqs. (2.3.3) into Eqs. (2.3.7) yields

$$U_r = U_p + [u_r(U_q - U_p) - v_r(V_q - V_p)]/a_{pq}, \tag{2.3.9}$$
$$V_r = V_p + [u_r(V_q - V_p) + v_r(U_q - U_p)]/a_{pq}$$

with their time derivatives

$$\dot{U}_r = \dot{U}_p + [u_r(\dot{U}_q - \dot{U}_p) - v_r(\dot{V}_q - \dot{V}_p)]/a_{pq}, \tag{2.3.10}$$
$$\dot{V}_r = \dot{V}_p + [u_r(\dot{V}_q - \dot{V}_p) + v_r(\dot{U}_q - \dot{U}_p)]/a_{pq}.$$

These are all of the transformations necessary in the derivations to follow. In Eq. (2.3.9) and Eq. (2.3.10), the transcendental functions of the link angle, γ_{pq}, have been eliminated.

2.4 Linear Momentum and Shaking Force

In [5], Berkof demonstrated that the shaking forces of a mechanism could be found as the time derivative of the linear momentum of the mechanism. The linear momentum of a link such as that shown in Fig. 2.4.1 can be written as

$$\underset{\sim}{L} = m(\dot{U}_G + i\dot{V}_G) \tag{2.4.1}$$

where $\dot{U}_G$ and $\dot{V}_G$ are the real and imaginary translational velocities of the

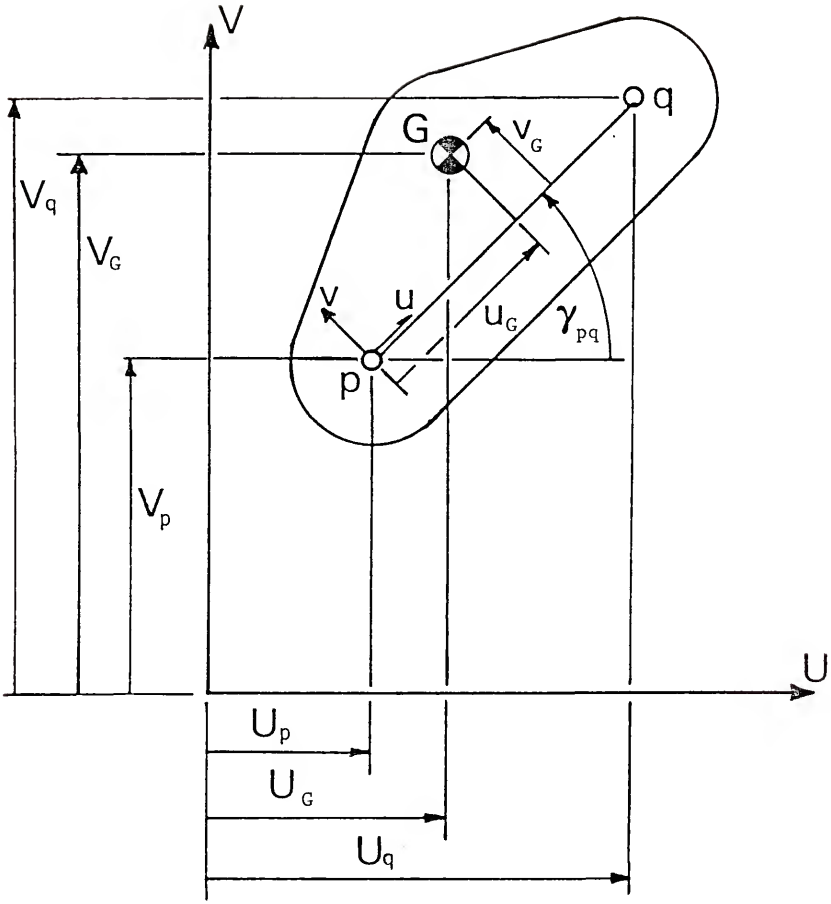

FIG. 2.4.1 A General Link with Mass Content

center of mass of the link. Substitution of Eqs. (2.3.8) into this equation yields

$$\underset{\sim}{L} = m[\dot{U}_p - u_G \sin \gamma_{pq} + v_G \cos \gamma_{pq})\gamma_{pq}$$
$$+ \underset{\sim}{i}\dot{V}_p + \underset{\sim}{i}(u_G \cos \gamma_{pq} - v_G \sin \gamma_{pq})\dot{\gamma}_{pq}].$$

If this equation is expanded and the constant coefficients are collected on the time-dependent variables, the result is

$$\underset{\sim}{L} = m(\dot{U}_p + i\dot{V}_p) + mu_G(\underset{\sim}{i}\cos \gamma_{pq} - \sin \gamma_{pq})\dot{\gamma}_{pq}$$
$$+ mv_G(-\cos \gamma_{pq} - \underset{\sim}{i}\sin \gamma_{pq})\dot{\gamma}_{pq}$$

which may be written as

$$\underset{\sim}{L} = Y_1^1 D_1^1 + Y_2^1 D_2^1 + Y_3^1 D_3^1 + Y_4^1 D_4^1 = \sum_{i=1}^{4} Y_i^1 D_i^1 \tag{2.4.2}$$

where

$Y_1^1 = m,$

$Y_2^1 = mu_G,$

$Y_3^1 = mv_G,$

$Y_4^1 =$ (a term to be defined in the next section),

$D_1^1 = \dot{U}_p + \underset{\sim}{i}\dot{V}_p,$

$D_2^1 = (\underset{\sim}{i}\cos \gamma_{pq} - \sin \gamma_{pq})\dot{\gamma}_{pq},$

$D_3^1 = (-\cos \gamma_{pq} - \underset{\sim}{i}\sin \gamma_{pq})\dot{\gamma}_{pq},$

$D_4^1 = 0.$

Here Y_4^1 and D_4^1 have been defined simply for notational convenience as will be seen later. This is the formulation of the linear momentum of a link expressed in terms of the motion of a single point in the link and the rotation of the link. Alternatively, Eqs. (2.3.10) may be substituted for the velocities of the center of gravity of the link in Eq. (2.4.1) to yield

the new form of the linear momentum equation

$$L = m[\dot{U}_p + \{u_G(\dot{U}_q - \dot{U}_p) - v_G(\dot{V}_q - \dot{V}_p)\}/a_{pq} + \underset{\sim}{i}\{u_G(\dot{V}_q - \dot{V}_p) + v_G(\dot{U}_q - \dot{U}_p)\}/a_{pq}].$$

This result may be expanded and rewritten as

$$\underset{\sim}{L} = m\ (1 - u_G/a_{pq})(\dot{U}_p + \underset{\sim}{i}\dot{V}_p) + m(v_G/a_{pq})(\underset{\sim}{i}\dot{V}_p - \dot{U}_p) + m(-v_G/a_{pq})(\underset{\sim}{i}\dot{V}_q - \dot{U}_q) + m(u_G/a_{pq})(\dot{U}_q + \underset{\sim}{i}\dot{V}_q)$$

which has the reduced form of

$$\underset{\sim}{L} = Y_1^2D_1^2 + Y_2^2D_2^2 + Y_3^2D_3^2 + Y_4^2D_4^2 = \sum_{i=1}^{4} Y_i^2D_i^2 \qquad (2.4.3)$$

where

$Y_1^2 = m(1 - u_G/a_{pq})$,

$Y_2^2 = m(v_G/a_{pq})$,

$Y_3^2 = m(-v_G/a_{pq})$,

$Y_4^2 = m(u_G/a_{pq})$,

$D_1^2 = \dot{U}_p + \underset{\sim}{i}\dot{V}_p$,

$D_2^2 = \dot{V}_p - \underset{\sim}{i}\dot{U}_p$,

$D_3^2 = \dot{V}_q - \underset{\sim}{i}\dot{U}_q$, and

$D_4^2 = \dot{U}_q + \underset{\sim}{i}\dot{V}_q$.

This is the equation for the linear momentum of a link written in terms of the motion of two points, p and q, in the link. Both Eqs. (2.4.2) and (2.4.3) are written in terms of constant terms (defined in terms of some of the mass parameters of the link and the length of the link) which are coefficients of time-dependent terms. The total linear momentum of a mechanism may be found as the sum of the momenta of the individual links.

As was stated at the beginning of this section, the shaking force of a mechanism may be found as the time derivative of the linear momentum of the mechanism. The time derivative of Eq. (2.4.2) is

$$\underset{\sim}{F}_s = \sum_{i=1}^{4} Y_i^1 \dot{D}_i^1 \tag{2.4.4}$$

where

$\underset{\sim}{F}_s$ = the vector sum of forces exerted on the link by its surroundings

$\dot{D}_1^1 = \ddot{U}_p + \underset{\sim}{i}\ddot{V}_p,$

$\dot{D}_2^1 = (\underset{\sim}{i}\cos\gamma_{pq} - \sin\gamma_{pq})\ddot{\gamma}_{pq} + (\underset{\sim}{i}\cos\gamma_{pq} + \sin\gamma_{pq})\dot{\gamma}_{pq}^2,$

$\dot{D}_3^1 = (-\cos\gamma_{pq} - \underset{\sim}{i}\sin\gamma_{pq})\ddot{\gamma}_{pq} + (\sin\gamma_{pq} - \underset{\sim}{i}\cos\gamma_{pq})\dot{\gamma}_{pq}^2,$

$\dot{D}_4^1 = 0.$

A similar treatment of Eq. (2.4.3) yields

$$\underset{\sim}{F}_s = \sum_{i=1}^{4} Y_i^2 \dot{D}_i^2 \tag{2.4.5}$$

where

$\dot{D}_1^2 = \ddot{U}_p + \underset{\sim}{i}\ddot{V}_p,$

$\dot{D}_2^2 = \ddot{V}_p - \underset{\sim}{i}\ddot{U}_p,$

$\dot{D}_3^2 = \ddot{V}_q - \underset{\sim}{i}\ddot{U}_q,$

$\dot{D}_4^2 = \ddot{U}_q + \underset{\sim}{i}\ddot{V}_q.$

So that the shaking force of the mechanism has been found as the sum of a series of terms, each of which is composed of a constant term, which are coefficients of time-dependent variables.

2.5 Angular Momentum and Shaking Moment

It was demonstrated by Elliott and Tesar [10], and elsewhere, [1] and [3], that the shaking moment of a linkage can be found as the derivative

with respect to time of the total angular momentum of a mechanism. The angular momentum of a link, such as that shown in Fig. 2.4.1, is given as

$$\underset{\sim}{H}_o = m(U_G\dot{V}_G - V_G\dot{U}_G) + mk^2\dot{\gamma}_{pq} \tag{2.5.1}$$

where the first term on the right-hand-side of the equation is recognized as the moment of momentum of the link about the origin of the fixed reference system and the second term is the angular momentum of the link due to its angular velocity. Substitution of Eqs (2.3.7) and (2.3.8) for U_G, V_G, $\dot{U}_G$, $\dot{V}_G$ in the above equation results in

$$\begin{aligned}\underset{\sim}{H}_o = m[&(U_p + u_G\cos\gamma_{pq} - v_G\sin\gamma_{pq})(\dot{V}_p + \{u_G\cos\gamma_{pq} - v_G\sin\gamma_{pq}\}\dot{\gamma}_{pq}) \\ &- (V_p + u_G\sin\gamma_{pq} + v_G\cos\gamma_{pq})(\dot{U}_p - \{u_G\sin\gamma_{pq} + v_G\cos\gamma_{pq}\}\dot{\gamma}_{pq})] \\ &+ mk^2\dot{\gamma}_{pq}.\end{aligned}$$

If the indicated multiplication is carried out and terms collected in terms of constant coefficients, the result is

$$\begin{aligned}\underset{\sim}{H}_o = {} & m(U_p\dot{V}_p - V_p\dot{U}_p) + mu_G[(U_p\dot{\gamma}_{pq} + \dot{V}_p)\cos\gamma_{pq} + (V_p\dot{\gamma}_{pq} - \dot{U}_p)\sin\gamma_{pq}] \\ & + mv_G[(V_p\dot{\gamma}_{pq} - \dot{U}_p)\cos\gamma_{pq} - (U_p\gamma_{pq} + \dot{V}_p)\sin\gamma_{pq}] + m\,(k^2 + u_G^2 + v_G^2)\dot{\gamma}\end{aligned}$$

which can be written as

$$H_o = Y_1^1D_1^3 + Y_2^1D_2^3 + Y_3^1D_3^3 + Y_4^1D_4^3 \tag{2.5.2}$$

where

$$\begin{aligned}Y_4^1 &= m(k^2 + u_G^2 + v_G^2), \\ D_1^3 &= U_p\dot{V}_p - V_p\dot{U}_p, \\ D_2^3 &= (U_p\dot{\gamma}_{pq} + \dot{V}_p)\cos\gamma_{pq} + (V_p\dot{\gamma}_{pq} - \dot{U}_p)\sin\gamma_{pq}, \\ D_3^3 &= (V_p\dot{\gamma}_{pq} - \dot{U}_p)\cos\gamma_{pq} - (U_p\dot{\gamma}_{pq} + \dot{V}_p)\sin\gamma_{pq}, \\ D_4^3 &= \dot{\gamma}_{pq}.\end{aligned}$$

The rest of the Y_i^1 are the same as those defined in Eq. (2.4.2). This is the equation for the total angular momentum of a link expressed in terms of a set of constants (the Y_i^1) multiplied by a set of time-dependent variables (the D_i^3). The total angular momentum of a mechanism can be found as the sum of the angular momenta of the links of the mechanism. An alternative form of the angular momentum of a link may be found by substituting Eqs. (2.3.9) and (2.3.10) for U_G, V_G, $\dot{U}_G$, $\dot{V}_G$ and Eq. (2.4.6) for $\dot{\gamma}$ in Eq. (2.5.1) to give

$$\begin{aligned} H_o = {} & m[\{u_G(U_q - U_p) + v_G(V_q - V_p)\}\{u_G(\dot{V}_q - \dot{V}_p) + v_G(\dot{U}_q - \dot{U}_p)\}/a_{pq}^2 \\ & - \{u_G(V_q - V_p) + v_G(U_q - U_p)\}\{u_G(\dot{U}_q - \dot{U}_p) - v_G(\dot{V}_q - \dot{V}_p)\}/a_{pq}^2] \\ & + mk^2[(U_q - U_p)(\dot{V}_q - \dot{V}_p) - (V_q - V_p)(\dot{U}_q - \dot{U}_p)]/a_{pq}^2. \end{aligned}$$

If the indicated multiplication is carried out and the collection of terms is done in the previous manner, the equation reduces to

$$H_o = Y_1^3 D_1^4 + Y_2^3 D_2^4 + Y_3^3 D_3^4 + Y_4^3 D_4^4 \tag{2.5.3}$$

where

$$\begin{aligned} Y_1^3 &= m(1-2u_G/a_{pq}) + m(k^2 + u_G^2 + v_G^2)/a_{pq}^2, \\ Y_2^3 &= m(u_G/a_{pq}) - m(k^2 + u_G^2 + v_G^2)/a_{pq}^2, \\ Y_3^3 &= m(v_G/a_{pq}), \\ Y_4^3 &= m(k^2 + u_G^2 + v_G^2)/a_{pq}^2, \\ D_1^4 &= U_p\dot{V}_p - V_p\dot{U}_p, \\ D_2^4 &= U_p\dot{V}_q + U_q\dot{V}_p - V_p\dot{U}_q - V_q\dot{U}_p, \\ D_3^4 &= U_p\dot{U}_q - U_q\dot{U}_p + V_p\dot{V}_q - \dot{V}_q V_p, \\ D_4^4 &= U_q\dot{V}_q - V_q\dot{U}_q. \end{aligned}$$

This is the equation for the total momentum of a link expressed in terms of the motion of two points, p and q, in the link. It is a collection of products of constant coefficients and time-dependent variables. The total momentum of a mechanism may be found as the sum of the momenta of the individual links of the mechanism.

As was stated at the beginning of this section, the shaking moment of a mechanism may be found as the derivative with respect to time of the total momentum of the mechanism. If the time derivative of Eq. (2.5.2) is taken, the result is

$$\underset{\sim}{M}_0 = \sum_{i=1}^{4} Y_i^1 \dot{D}_i^3 \tag{2.5.4}$$

where

$\underset{\sim}{M}_0$ = the shaking moment with respect to the origin of the fixed coordinate system,

$\dot{D}_1^3 = U_p\ddot{V}_p - V_p\ddot{U}_p,$

$\dot{D}_2^3 = (U_p\ddot{\gamma}_{pq} + V_p\dot{\gamma}_{pq}^2 + \ddot{V}_p)\cos\gamma_{pq} + (V_p\ddot{\gamma}_{pq} - U_p\dot{\gamma}_{pq}^2 - \ddot{U}_p)\sin\gamma_{pq},$

$\dot{D}_3^3 = (V_p\ddot{\gamma}_{pq} - U_p\dot{\gamma}_{pq}^2 - \ddot{U}_p)\cos\gamma_{pq} - (U_p\ddot{\gamma}_{pq} + V_p\dot{\gamma}_{pq}^2 + \ddot{V}_p)\sin\gamma_{pq}$, and

$\dot{D}_4^3 = \ddot{\gamma}_{pq}.$

For Eq. (2.5.3), the differentiation yields

$$\underset{\sim}{M}_0 = Y_1^3\dot{D}_1^4 + Y_2^3\dot{D}_2^4 + Y_3^3\dot{D}_3^4 + Y_4^3\dot{D}_4^4 \tag{2.5.5}$$

where

$\dot{D}_1^4 = U_p\ddot{V}_p - V_p\ddot{U}_p,$

$\dot{D}_2^4 = U_p\ddot{V}_q + U_q\ddot{V}_p - V_p\ddot{U}_q - V_q\ddot{U}_p,$

$\dot{D}_3^4 = U_p\ddot{U}_q - U_q\ddot{U}_p + V_p\ddot{V}_q - V_q\ddot{V}_p$, and

$\dot{D}_4^4 = U_q\ddot{V}_q - V_q\ddot{U}_q.$

This provides two formulations of the equation for the shaking moment of a mechanism; the first, Eq. (2.5.4), expressed in terms of the motion of a point, p, in a link and the rotation, γ_{pq}, of the link and the second, Eq. (2.5.5), expressed in terms of the motion of two points, p,q, in the link. Both of these equations, though algebraically different, will yield the same value for the shaking moment of a mechanism.

2.6 Kinetic Energy, Inertia Driving Torque and Power

The kinetic energy of a link (see Fig. 2.4.1) is given as

$$E^i = \tfrac{1}{2}m(\dot{U}_G^2 + \dot{V}_G^2) + \tfrac{1}{2}mk^2\dot{\gamma}_{pq}^2 . \tag{2.6.1}$$

The first term of this equation is the kinetic energy due to the linear velocity of the center of gravity of the link and the second term is the kinetic energy due to the angular velocity of the link. Substitution of Eq. (2.3.8) for $\dot{U}_G$ and $\dot{V}_G$ into the equation yields

$$E^i = \frac{1}{2}m[\{\dot{U}_p - (u_G\sin\gamma_{pq} + v_G\cos\gamma_{pq})\dot{\gamma}_{pq}\}^2$$
$$+ \{\dot{V}_p + (u_G\cos\gamma_{pq} - v_G\sin\gamma_{pq})\dot{\gamma}_{pq}\}^2] + \frac{1}{2}mk^2\dot{\gamma}_{pq}^2.$$

If this form is expanded and the appropriate collection of terms performed, the resulting equation is

$$E^i = m[\tfrac{1}{2}(\dot{U}_p^2 + \dot{V}_p^2)] + mu_G(-\dot{U}_p\sin\gamma_{pq} + \dot{V}_p\cos\gamma_{pq})\dot{\gamma}_{pq}$$
$$+ mv_G(\dot{U}_p\cos\gamma_{pq} - \dot{V}_G\sin\gamma_{pq})\dot{\gamma}_{pq} + m(k^2 + u_G^2 + v_G^2)(\tfrac{1}{2}\dot{\gamma}_{pq}^2)$$

which can be written as

$$E^i = \sum_{i=1}^{4} Y_i^1 D_i^5 \tag{2.6.2}$$

where the variable terms are

$$D_1^5 = \frac{1}{2}(\dot{U}^2 + \dot{V}^2),$$

$$D_2^5 = (-\dot{U}_p \sin \gamma_{pq} + \dot{V}_p \cos \gamma_{pq})\dot{\gamma}_{pq},$$

$$D_3^5 = (\dot{U}_p \cos \gamma_{pq} - \dot{V}_p \sin \gamma_{pq})\dot{\gamma}_{pq}, \text{ and}$$

$$D_4^5 = \frac{1}{2}\dot{\gamma}_{pq}^2.$$

This equation expresses the kinetic energy of a link in terms of the translation of a point in the link and the rotation of the link. Alternately, Eq. (2.3.10) may be substituted for $\dot{U}_G$ and $\dot{V}_G$ and Eq. (2.3.5) may be substituted for $\dot{\gamma}_{pq}^2$ in Eq. (2.6.1) to yield

$$\begin{aligned} E^i = \frac{1}{2}[&\{\dot{U}_p + (u_G(\dot{U}_q - \dot{U}_p) - v_G(\dot{V}_q - \dot{V}_p)\} \\ &+ \{\dot{V}_p + (u_G(\dot{V}_q - \dot{V}_p) + v_G(\dot{U}_q - \dot{U}_p)\}]/a_{pq}^2 \\ &+ mk^2[(\dot{U}_q - \dot{U}_p)^2 + (\dot{V}_q - \dot{V}_p)^2]/a_{pq}^2. \end{aligned}$$

When the terms are squared as indicated and the equation simplified by collecting terms, the result is

$$\begin{aligned} E^i = {} & m(1 - 2u_G/a_{pq}) + \left(\frac{m(k^2 + u_G^2 + v_G^2)}{a_{pq}^2}\right)[\tfrac{1}{2}(\dot{U}_p^2 + \dot{V}_p^2)] \\ & + m\left(\frac{u_G}{a_{pq}}\right) - \frac{m(k^2 + u_G^2 + v_G^2)}{a_{pq}^2}(\dot{U}_p\dot{U}_q + \dot{V}_p\dot{V}_q) \\ & + m\left(\frac{v_G}{a_{pq}}\right)(\dot{V}_p\dot{U}_q - \dot{U}_p\dot{V}_q) + m(k^2 + u_G^2 + v_G^2)[\tfrac{1}{2}(\dot{U}_p^2 + \dot{V}_q^2)] \end{aligned}$$

which can be rewritten in the economical form

$$E^i = Y_1^3 D_1^6 + Y_2^3 D_2^6 + Y_3^3 D_3^6 + Y_4^3 D_4^6 \tag{2.6.3}$$

where

$$D_1^6 = \frac{1}{2}(\dot{U}_p^2 + \dot{V}_p^2),$$

$$D_2^6 = \dot{U}_p\dot{U}_q + \dot{V}_p\dot{V}_q,$$

$$D_3^6 = \dot{U}_q\dot{V}_p - \dot{U}_p\dot{V}_q, \text{ and}$$

$$D_4^6 = \frac{1}{2}(\dot{U}_q^2 + \dot{V}_q^2).$$

This is the equation for the kinetic energy of a link experiencing coplanar motion expressed in terms of the motion of two points in the link.

The total kinetic energy of a mechanism may be found as the sum of the kinetic energies of the links of the system. The inertia driving torque, T_d^i, for a system may be found as the positional or geometric derivative of the kinetic energy of the system. For a single degree of freedom system, the geometric derivative of the kinetic energy for a single link with θ_i (the input position parameter) as reference may be found for Eq. (2.6.2) as

$$T_d^i = \left(\frac{d}{d\theta_i}\right)E^i = \sum_{i=1}^{4} Y_i^3\left(\frac{d}{d\theta_i}\right)D_i^5 = \sum_{i=1}^{4} Y_i^3(D_i^5)' \tag{2.6.4}$$

where

$$(D_1^5)' = (\dot{U}_p\dot{U}_p' + \dot{V}_p\dot{V}_p'),$$

$$(D_2^5)' = (\dot{V}_p\dot{\gamma}_{pq}' - \dot{U}_p\dot{\gamma}_{pq}\gamma_{pq}' + \dot{V}_p'\dot{\gamma}_{pq})\cos\gamma_{pq}$$
$$- (\dot{U}_p\dot{\gamma}_{pq}' + V_p\dot{\gamma}_{pq}\gamma_{pq}' + \dot{U}_p'\dot{\gamma}_{pq})\sin\gamma_{pq},$$

$$(D_3^5)' = (\dot{U}_p\dot{\gamma}_{pq}' - \dot{V}_p\dot{\gamma}_{pq}\gamma_{pq}' + \dot{U}_p'\dot{\gamma}_{pq})\cos\gamma_{pq}$$
$$- (\dot{V}_p\dot{\gamma}_{pq}' + \dot{U}_p\dot{\gamma}_{pq}\gamma_{pq}' + \dot{V}_p'\dot{\gamma}_{pq})\sin\gamma_{pq}, \text{ and}$$

$$(D_4^5)' = (\dot{\gamma}_{pq}'\dot{\gamma}_{pq}).$$

Also, for Eq. (2.6.3)

$$T_d^i = \sum_{i=1}^{4} Y_i^3 (D_i^6)' \tag{2.6.5}$$

where

$$(D_1^6)' = (\dot{U}_p \dot{U}_p' + \dot{V}_p \dot{V}_p'),$$
$$(D_2^6)' = (\dot{U}_p' \dot{U}_q + \dot{U}_p \dot{U}_q' + \dot{V}_p' \dot{V}_q + \dot{V}_p \dot{V}_q'),$$
$$(D_3^6)' = (\dot{U}_q' \dot{V}_p + \dot{U}_q \dot{V}_p' - \dot{U}_p' \dot{V}_q - \dot{U}_p \dot{V}_q'), \text{ and}$$
$$(D_4^6)' = (\dot{U}_q \dot{U}_q' + \dot{V}_q \dot{V}_q').$$

The power required to drive the mass of a mechanism may be found as the time derivative of the total kinetic energy of the system. For the individual links of the system, the time derivative of Eq. (2.6.2) is

$$p^i = \sum_{i=1}^{4} Y_i^1 \dot{D}_i^5 \tag{2.6.6}$$

where

$$\dot{D}_1^5 = \dot{U}_p \ddot{U}_p + \dot{V}_q \ddot{V}_q,$$
$$\dot{D}_2^5 = (\dot{V}_p \ddot{\gamma}_{pq} - \dot{U}_p \dot{\gamma}_{pq}^2 + \ddot{V}_p \dot{\gamma}_{pq}) \cos \gamma_{pq}$$
$$\quad - (\dot{U}_p \ddot{\gamma}_{pq} + \dot{V}_p \dot{\gamma}_{pq}^2 + \ddot{U}_p \dot{\gamma}_{pq}) \sin \gamma_{pq},$$
$$\dot{D}_3^5 = (\dot{U}_p \ddot{\gamma}_{pq} - \dot{V}_p \dot{\gamma}_{pq}^2 + \ddot{U}_p \dot{\gamma}_{pq}) \cos \gamma_{pq}$$
$$\quad - (\dot{V}_p \ddot{\gamma}_{pq} + \dot{U}_p \dot{\gamma}_{pq}^2 + \ddot{V}_p \dot{\gamma}_{pq}) \cos \gamma_{pq}, \text{ and}$$
$$\dot{D}_4^5 = \dddot{\gamma}\dot{\gamma}.$$

Also, for Eq. (2.6.3)

$$p^i = \sum_{i=1}^{4} Y_i^3 \dot{D}_i^6 \tag{2.6.7}$$

where

$\dot{D}_1^6 = \dot{U}_p\ddot{U}_p + \dot{V}_p\ddot{V}_p$,

$\dot{D}_2^6 = \ddot{U}_p\dot{U}_q + \dot{U}_p\ddot{U}_q + \ddot{V}_p\dot{V}_q + \dot{V}_p\ddot{V}_q$,

$\dot{D}_3^6 = \ddot{U}_q\dot{V}_p + \dot{U}_q\ddot{V}_p - \ddot{V}_p\dot{U}_q - \dot{V}_p\ddot{U}_q$, and

$\dot{D}_4^6 = \dot{U}_q\ddot{U}_q + \dot{V}_q\ddot{V}_q$.

Thus, in this section, the algebraic equations for each of the properties, kinetic energy, inertia driving torque, and power, have been formulated in two distinct forms. All of these equations are expressed in terms of a set of constant coefficients, the Y_i in terms of the link dimensions and mass parameters, multiplied by a set of time-dependent variables, the D_i in terms of the motion phenomena of the linkage.

2.7 Reaction Moment Equation

It is well known that the shaking moment, $\underset{\sim}{M}_o$, and the inertia driving torque, $\underset{\sim}{T}_d^i$, are related (see Ref. [4]) by the equation

$$\underset{\sim}{M}_o = \underset{\sim}{T}_d^i + \underset{\sim}{r}_i \times \underset{\sim}{F}_i$$

where

$\underset{\sim}{r}_i$ = the vector locating the fixed pivots of a mechanism, and

$\underset{\sim}{F}_i$ = the reaction forces to ground of the mechanism.

This equation can be solved to yield

$$\underset{\sim}{M}_o^r = \underset{\sim}{r}_i \times \underset{\sim}{F}_i = \underset{\sim}{M}_o - \dot{\underset{\sim}{T}}_d^i \tag{2.7.1}$$

where

$\underset{\sim}{M}_o^r$ = the reaction moment of the mechanism.

Figure 2.7.1 is a graphical representation of this equation. Earlier in this chapter, the equations for the shaking moment and inertia driving torque were found in two forms. If the definitions of shaking moment and inertia driving torque are substituted into Eq. (2.7.1), two forms of the reaction moment equation can be found. Using Eqs. (2.5.4) and (2.6.3) gives

$$\underset{\sim}{M}_0^r = \sum_{i=1}^{4} (Y_i^1 \dot{D}_i^3 - Y_i^1 (D_i^5)') = \sum_{i=1}^{4} Y_i^1 (\dot{D}_i^3 - (D_i^5)') \tag{2.7.2}$$

or, if Eqs. (2.5.5) and (2.6.4) are used, the formula takes the form

$$\underset{\sim}{M}_0^r = \sum_{i=1}^{4} Y_i^3 (\dot{D}_i^4 - (D_i^6)'). \tag{2.7.3}$$

The result is that the reaction moment of the link is expressed in two similar forms, both of which consist of constant coefficients multiplied by time-dependent variables. The total reaction moment of the mechanism may be found as the sum of the contributions of each of the links in the mechanism.

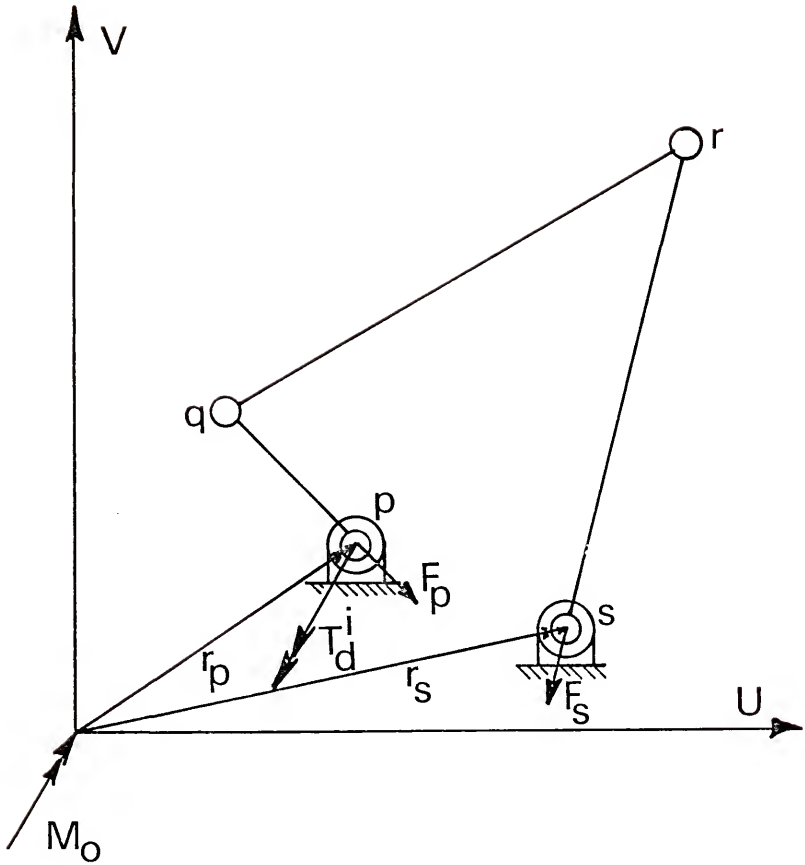

FIG. 2.7.1 Illustration of the Relation Between Dynamic Properties

CHAPTER THREE

METHODS

3.1 Purpose

Balancing, as it is defined for this dissertation, is the adjustment of the mass parameters of the links of a mechanism to suit prescribed conditions in one or more of the dynamic properties. The equations that were developed in Chapter Two can and have been separated into two parts: the first part is the collection of the terms that are constants, Y_i, and that are made up of the mass parameters of the mechanism and the kinematic parameters of the mechanism; the second part is a series of terms that are time-dependent variables, D_i. For any given mechanism, the time-dependent terms are fixed when the dimensions of the links of the mechanism are selected and the input state defined. Through control of the constant premultipliers, Y_i, of the time-dependent terms, one can control the dynamic properties of the mechanism. The methods to be developed in this chapter will allow one to have a closed form solution for the mass parameters that will satisfy the prescribed conditions and will show that the form of the equations that have been developed lends itself well to various schemes of optimization. The methods will be developed through the use of non-numerical examples. In Chapter Four, numerical examples of balanced mechanisms will be given.

3.2 Linear Dependence

In Ref. [5], it was demonstrated that conditions for shaking force balancing of simple linkages could be derived from the equation which locates the center of mass of the linkage if that equation were expressed in terms of a set of linearly independent vectors. This concept was extended to the shaking moment and inertia driving torque balancing of four-link mechanisms in [10]. Here it will be shown that the formulations of the equations for the dynamic properties of general planar linkages, as derived in Chapter Two, are expressed in terms of a set of linearly independent vectors. Therefore, it will be possible to derive a set of balancing conditions for any particular mechanism.

Figure 3.2.1 is a line representation of a four-bar linkage. The well-known vector loop equation for this linkage can be written for this mechanism as

$$a_1 e^{i\phi_1} + a_2 e^{i\phi_2} - a_3 e^{i\phi_3} - a_4 e^{i\phi_4} = 0 \tag{3.2.1}$$

where

a_i (i = 1, 2, 3, 4) are the constant link lengths of the linkage, and
$e^{i\phi_i}$ (i = 1, 2, 3, 4) are unit vectors which are determined by the positions of the linkage.

From the definition of linear independence, as given in Ref. [29], the unit vectors $e^{i\phi_i}$ will be linearly independent only if all the coefficients are zero to satisfy the controlling equation such as that of Eq. (3.2.1). If this is not the case, it may be concluded that the unit vectors, the $e^{i\phi_i}$, are linearly dependent. In Refs. [10] and [5], Eq. (3.2.1) was used to eliminate one of the time-dependent variables, ϕ_1,

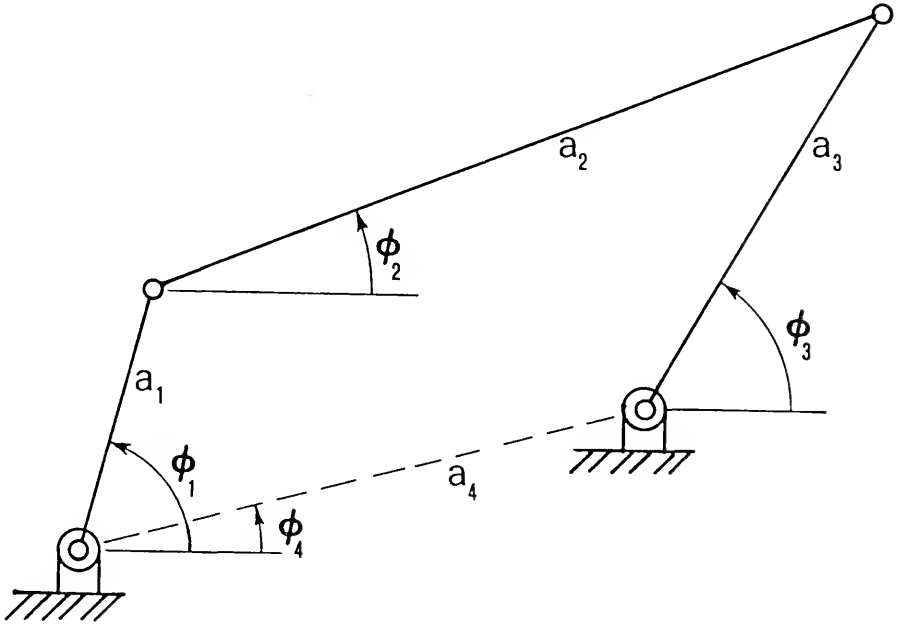

FIG. 3.2.1 Typical Four-Bar Linkage

ϕ_2, or ϕ_3, from an equation for a given dynamic property of a linkage. This equation was then expressed in terms of two of the vectors, $e^{i\phi_1}$ (i = 1, 2, 3) and $e^{i\phi_4}$ which is a constant. Then, this equation was found to be expressed in terms of a set of linearly independent vectors, i.e.,

$$a_1 e^{i\phi_1} + a_3 e^{i\phi_3} + a_4 e^{i\phi_4} = 0$$

which can only be satisfied, in general, if all the a_i are exactly equal to zero.

All of the equations for the dynamic properties of linkages, such as that shown in Fig. 3.2.1, which were derived in Chapter Two, are expressed in terms of the motion of the two pin-joints, 2 and 3, of the linkage. It is immediately obvious that

$$S = f(X_2, Y_2, X_3, Y_3) = f(\phi_1, \phi_2) = f(\phi_1, \phi_3)$$

where

S = a given dynamic property,

f = the resulting function, and

(X_2, Y_2, X_3, Y_3) = the motion of pin-joints 2 and 3.

From this observation, it is recognized that the equation for a dynamic property of a four-link mechanism, which is written in terms of the motion of the pin-joints, is expressed in terms of a set of linearly independent vectors. Since this was done in Chapter Two for all of the dynamic properties of general planar linkages, it is apparent that any of these equations, Eqs. (2.4.3), (2.5.3) and (2.6.3), will yield a set of balancing conditions if properly rearranged. In the following sections of this chapter, that manipulation will be explained.

3.3 Notation

A convenient system of notation is adopted as depicted in Fig. 3.3.1. A link with two pin-joints is represented by the letters p and q or the ordered pair, pq, which is representative of the two endpoints of the link. A reference system is fixed in the moving link with its origin attached at the p end of the link and the u-axis aligned along the center-line, pq, of the link. The importance of this orientation will be demonstrated later. A link that is a part of a sliding pair is designated with a similar pair of letters, rs. Where r is fixed to a pin-joint in the link, if one is available; otherwise, it may be any point in the link. In this work, the direction of rs is taken in the same direction as relative sliding between the associated sliding links. A moving coordinate system is fixed in the link with the origin attached to r. The u-axis of the moving coordinate system is aligned along rs. The use of this notation will result in the designation of each link in the system by a pair of numbers or letters.

The object of the synthesis procedures, that will be developed here, is to define the mass parameters of the link. Since this is required, the location of the center of the mass of the link will be defined in the moving system with the pair (u_{pq}, v_{pq}) for the pin-jointed link and similarly for the links of the sliding pair. The mass of the link will be identified as m_{pq}. The moment of inertia of the link about its center of gravity will be designated as $\overline{I}_{pq} = m_{pq}k_{pq}^2$.

3.4 The Method

In Chapter Two, it was demonstrated that any of the dynamic properties of a mechanism could be defined as the sum of that particular property for all of the links of the mechanism. Further, it was shown that each

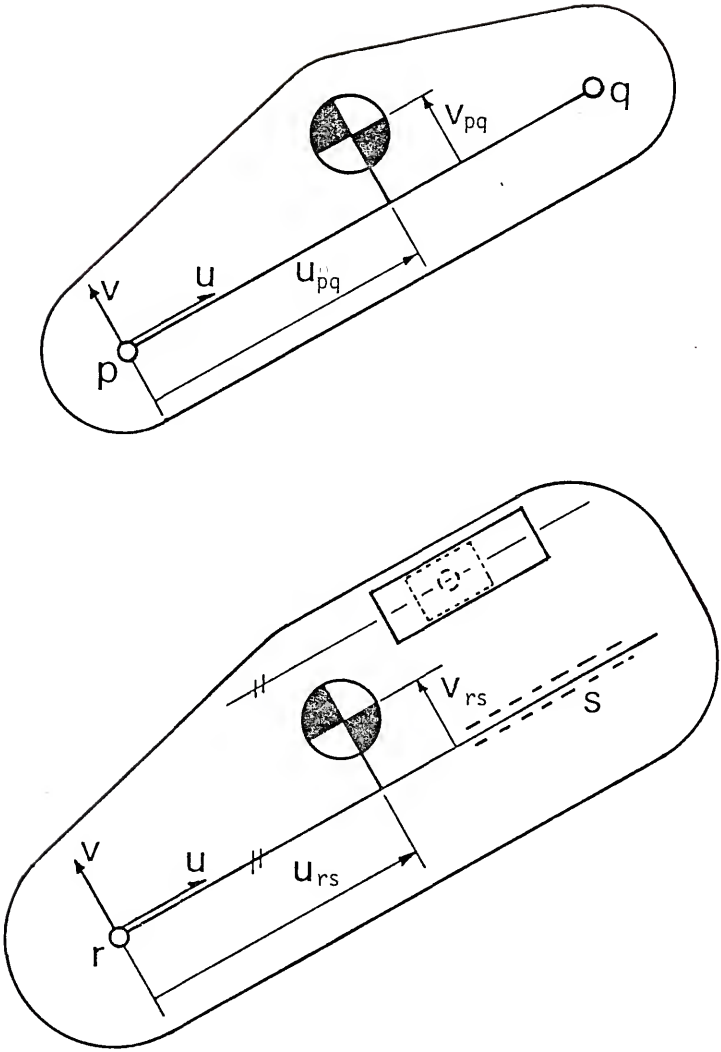

FIG. 3.3.1 Typical Links

of the dynamic properties of the individual links could be expressed as the sum of four terms where each of the terms is the product of a constant, Y_i, and a variable, D_i. If S represents any dynamic property, then

$$S = \sum_{pq} \sum_{i=1}^{4} Y_{ipq}^{j} D_{ipq}^{m} + \sum_{rs} \sum_{i=1}^{4} Y_{irs}^{l} D_{irs}^{n} \tag{3.4.1}$$

where

$\sum_{pq}$ stands for the sum over all of the links with pin-joints at each end,

Y_{ipq}^{j} are the Y_i^j from Chapter Two with the added subscripts to count over all the pinned links of the system,

D_{ipq}^{m} are the D_i^m from Chapter Two with the added subscripts to count over all the pinned links of the system,

$\sum_{rs}$ stands for the sum over all of the sliding links,

Y_{irs}^{l} are the Y_i^l from Chapter Two with the added subscripts, rs, to count over all the sliding links of the system,

D_{irs}^{n} are the D_i^n from Chapter Two with the added subscripts, rs, to count over all of the sliding links of the system,

m = 2, 4, or 6,

n = 1, 3, or 5, and

j = 2 or 3.

From this point on it is assumed that Y_{ipq} stands for any of the Y_{ipq}^{j} or Y_{irs}^{l} and that D_{ipq} stands similarly for the D_{ipq}^{m} or D_{irs}^{n}. The equation for any dynamic property can be written as

$$S = \sum_{pq} \sum_{i=1}^{4} Y_{ipq} D_{ipq}. \tag{3.4.2}$$

Now, it is presumed that the kinematic representation of the mechanism exists and that a kinematic analysis of the mechanism has been performed. If this is the case, then the D_{ipq} may be considered as knowns. Their functional form will not change so long as the kinematic dimensions of the mechanism and the input state(s) are not altered. If the Y_{ipq} of the mechanism are known, then a dynamic property of the mechanism can be evaluated for each position of the mechanism using Eq. (3.4.2). If this evaluation is performed for several positions of the mechanism, then the dynamic property could be evaluated in several positions and the results tabulated in matrix form as

$$[S] = [D][X]$$

where

[S] is a single column containing the values of a dynamic property for each position of the mechanism,

[X] is a single column made up of the various Y_{ipq} of the mechanism, and

[D] is a matrix of the variable D_{ipq} terms, each row of this matrix corresponds to a single position of the mechanism.

On the other hand, if the dynamic property in each position is known and it is desired to balance the mechanism by determining the Y_{ipq}, a simple process of matrix manipulation yields

$$[D]^{-1}[S] = [D]^{-1}[D][X] = [X] \tag{3.4.3}$$

where $[D]^{-1}$ is the inverse of the matrix [D]. The inverse of a matrix will exist if, and only if, the matrix is non-singular. This requires that [D] be a linearly independent matrix.

It was shown in Section 3.2 that the equations developed in Chapter Two for the dynamic properties of mechanisms are expressed in terms of a set of linearly independent vectors. However, a definition of linear independence from matrix algebra requires that the columns and rows of the matrix [D] be linearly independent. This means that no columns (rows) may be equal to any other columns (rows) of the matrix and that no columns (rows) of the matrix be made up of a linear combination of other columns (rows) of the matrix. For the mechanism shown in Fig. 3.4.1, the general equation for any dynamic property can be written as

$$\begin{aligned} S = {} & Y_{112}D_{112} + Y_{212}D_{212} + Y_{312}D_{312} + Y_{412}D_{412} \\ & + Y_{123}D_{123} + Y_{223}D_{223} + Y_{323}D_{323} + Y_{423}D_{423} \\ & + Y_{134}D_{134} + Y_{234}D_{234} + Y_{334}D_{334} + Y_{424}D_{424}. \end{aligned} \tag{3.4.4}$$

From Eqs. (2.4.2) and (2.7.3), it is possible to recognize special values for certain of the D_{ipq} for all dynamic properties (see Appendix A)

$$D_{112} = D_{434} = 0$$

and (see Appendix B)

$$D_{412} = D_{123};\ D_{423} = D_{134}.$$

The substitution of these definitions into Eq. (3.4.4) yields

$$\begin{aligned} S = {} & Y_{112}0 + Y_{212}D_{212} + Y_{312}D_{312} + Y_{412}D_{123} \\ & + Y_{123}D_{123} + Y_{223}D_{223} + Y_{323}D_{323} + Y_{423}D_{134} \\ & + Y_{134}D_{134} + Y_{234}D_{234} + Y_{334}D_{334} + Y_{434}0 \end{aligned}$$

where, in matrix form, each of the D_{ipq} would represent a column of the matrix [D]. In order for [D] to be nonsingular this form must be

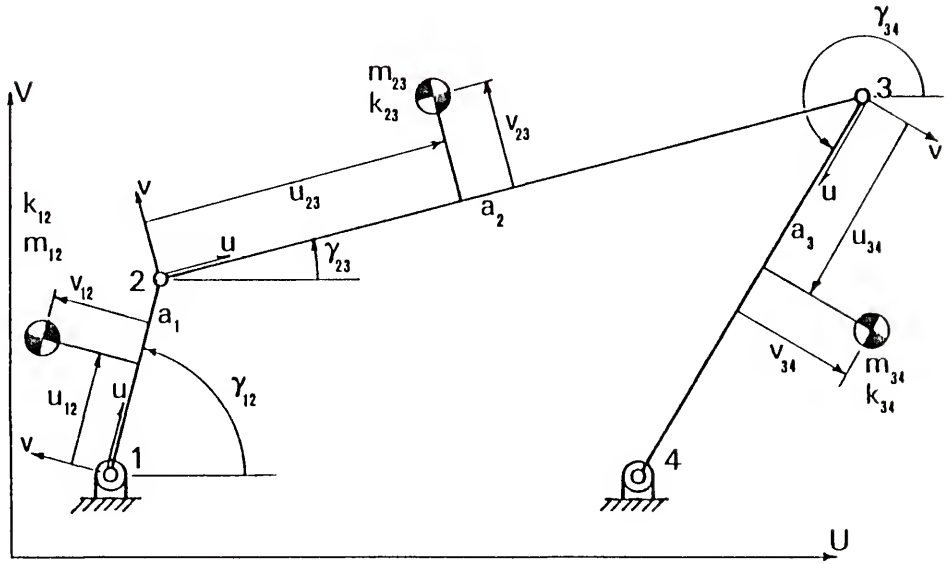

FIG. 3.4.1 A General Four-Bar with Mass Content

rearranged. The columns of zeros must be eliminated along with the corresponding constants, Y_{112} and Y_{434}, and the number of columns of the matrix must be reduced since, in two cases, adjacent columns will be equal to one another. If both of these requirements are fulfilled, the equation becomes

$$S = Y_{212}D_{212} + Y_{312}D_{312} + Y_{223}D_{223} + Y_{323}D_{323} + Y_{234}D_{234} + Y_{334}D_{334} + [Y_{412} + Y_{123}]D_{123} + [Y_{423} + Y_{134}]D_{134} \tag{3.4.5}$$

or

$$S = X_1D_{212} + X_2D_{312} + X_3D_{223} + X_4D_{323} + X_5D_{234} + X_6D_{334} + X_7D_{123} + X_8D_{134} \tag{3.4.6}$$

where

$X_1 = Y_{212}$,

$X_2 = Y_{312}$,

$X_3 = Y_{223}$,

$X_4 = Y_{323}$,

$X_5 = Y_{234}$,

$X_6 = Y_{334}$,

$X_7 = Y_{412} + Y_{123}$, and

$X_8 = Y_{423} + Y_{134}$.

This is the most compact representation of the general equation for dynamic properties of the simple four-link mechanism shown in Fig. 3.4.1. It is expressed in terms of a set of linearly independent vectors (the D terms) and all of the linear dependencies of the matrix form have been eliminated. The equation may be used in the matrix manipulation of Eq. (3.4.3) to find

the values of the components of [X] to satisfy a set of specified values of dynamic properties [S] to balance a mechanism. The equation for the dynamic property of any mechanism must be reduced in a similar manner to its linear independent form in order that it may be used to balance the mechanism. Other examples of the elimination of linear dependence will be illustrated in the next section so that the extension to more complex mechanisms will be apparent.

3.5 The Ternary

It was demonstrated in Section 3.2 that the formulation of the equations for dynamic properties, as given in Chapter Two, eliminates linear dependence for grounded loops of links. It is further necessary to eliminate linear dependence which is introduced by any closed loops in a system which is not grounded. A mechanism containing one of these loops is shown in Fig. 3.5.1. Observe that the loop 2367 is connected directly to ground only at pin-joint 1 and that a vector expression may be written for this loop in the form

$$a_{26}e^{i\phi_{26}} + a_{67}e^{i\phi_{67}} - a_{23}e^{i\phi_{23}} - a_{37}e^{i\phi_{37}} = 0$$

which is of the same form as Eq. (3.2.1). Note that the values for all of the constant a_{pq} are non-zero. This means that the vectors, $e^{i\phi_{26}}$, $e^{i\phi_{67}}$, $e^{i\phi_{23}}$ and $e^{i\phi_{37}}$, are linearly dependent. Therefore, at least one of these variables must be eliminated from any expression for a dynamic property of a mechanism in order to use that equation to arrive at a set of balancing conditions for the mechanism.

A second requirement (definition) of linear independence can be found in the field of linear algebra as: A square matrix is nonsingular (possesses an inverse) if, and only if, its columns are linearly independent

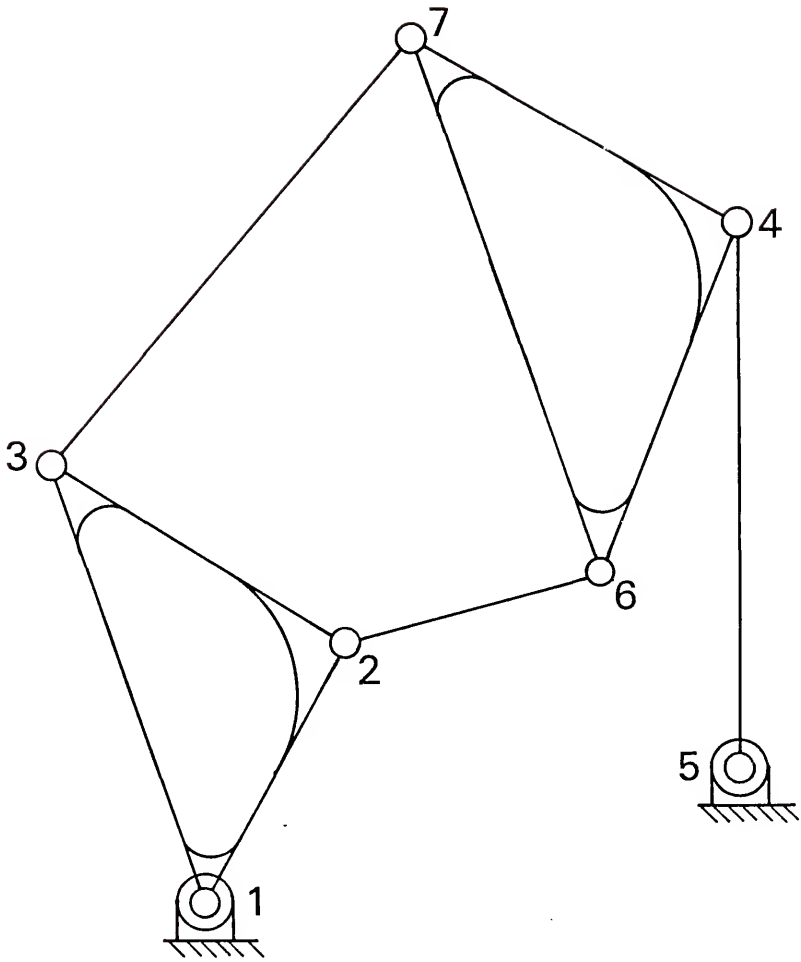

FIG. 3.5.1 Stephenson 2 Six-Bar Linkage

[18]. The columns of a matrix will be linearly dependent if any column can be formed as a linear combination of any other columns, i.e., if any column can be formed by multiplying one or more of the other columns by constants and adding the results. This requires that any column of a matrix which can be decomposed into a linear combination of other columns of the matrix must be so decomposed and the rank of the matrix reduced by distribution of the dependent column among its constituents.

In this dissertation, a matrix form of the dynamic equations will be used to balance mechanisms and therefore all linear dependence must be eliminated. The possible physical forms of a ternary link using pin-joints and sliding joints are shown in Fig. 3.5.2. Figure 3.5.2(a) is a ternary with three pin-joints. The linear dependence for the pin jointed ternary will be eliminated here for the condition of linear momentum for a general link.

The time dependent terms of the equation for linear momentum were defined in Eqs. (2.4.2) and (2.4.3). For the adjacent link, rs, the first term is

$$D^1_{1rs} = D^2_{1rs} = \dot{U}_r + \dot{V}_r.$$

If the transformations of Eq. (2.3.10) are substituted here, the result is

$$\begin{aligned} D^1_{1rs} = D^2_{1rs} = {} & \dot{U}_p + [u_r(\dot{U}_q - \dot{U}_p) - v_r(\dot{V}_q - \dot{V}_p)]/a_{pq} \\ & + \dot{V}_p + [u_r(\dot{V}_q - \dot{V}_p) + v_r(\dot{U}_q - \dot{U}_p)]/a_{pq}. \end{aligned}$$

From the definitions of the D^1_{ipq} in Eq. (2.4.3), it is evident that

$$\begin{aligned} D^1_{1rs} = D^2_{1rs} = {} & (1-u_r/a_{pq})D^2_{1pq} + (v_r/a_{pq})D^2_{2pq} \\ & + (-v_r/a_{pq})D^2_{3pq} + (u_r/a_{pq})D^2_{4pq}. \end{aligned}$$

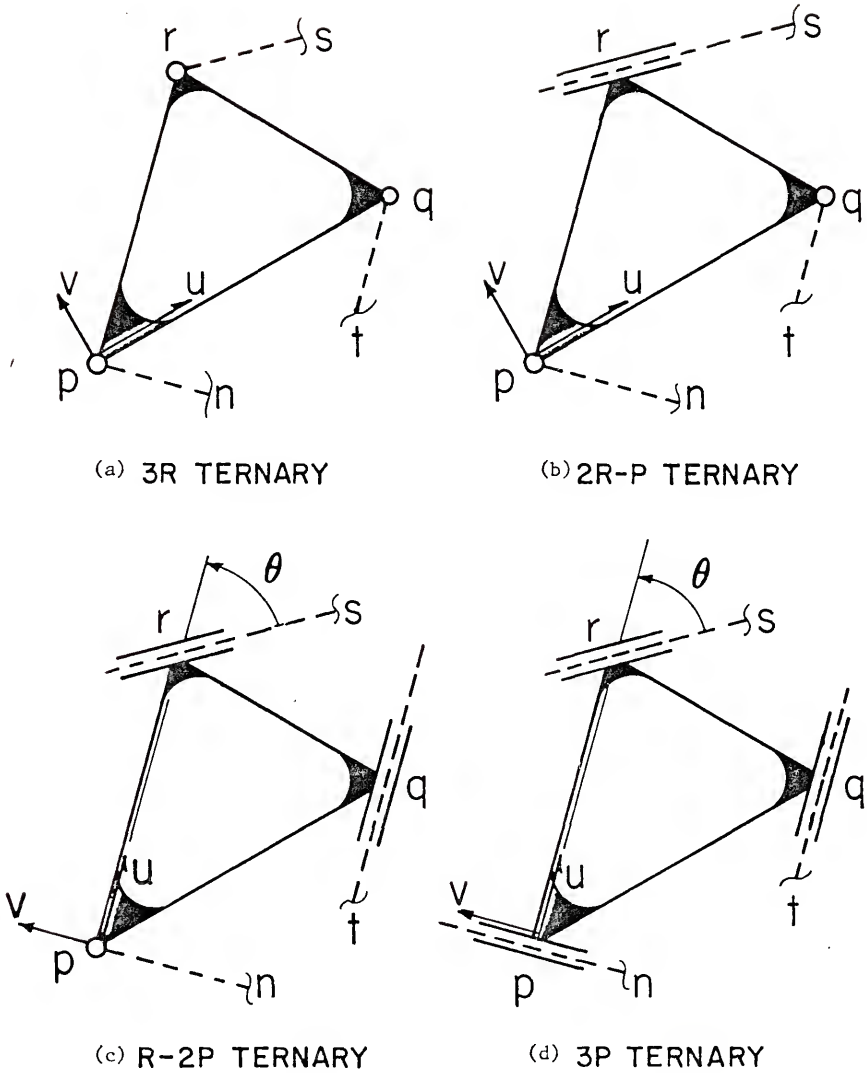

FIG. 3.5.2 Possible Ternaries

Thus, it is demonstrated that $D^1_{1rs} = D^2_{2rs}$ is a linear combination of the D^2_{ipq}, i = 1, 2, 3, 4. Because of the definition of linear dependence, this type of decomposition must be accomplished for all such terms in order to arrive at a linearly independent matrix formulation of the dynamic properties of a mechanism. Table 3.5.1 is a listing of decomposition for the third point of all four possible ternary links. The ternaries are those shown in Fig. 3.5.2. The sub-cases for each ternary correspond to the various ways that the three joints of the ternary can be ordered. Case I.1 is the ordering used in the derivation above with pq as the "base" of the ternary and r as the third point. Case I.2 is for the use of pr as the base and q as the third point, while Case I.3 uses qr as the base and p as the third point. In all cases, the ordering of the designation may be reversed, i.e., pq and qp are both legitimate bases for the ternary. All of the cases for the three pin-joint ternary use the same decomposition if the subscripts p, q, and r are suitably rearranged.

The case system and corresponding ordering of points that were used for Ternary I will be used for each of the other ternaries. For Ternary II, Case II.1 is unique and Cases II.2 and II.3 use the same transformation with reordering of subscripts. For Ternary III, Case III.2 is unique and II.1 and III.3 use the same transformation if the subscripts are changed accordingly. Ternary IV is similar to Ternary I in that the decomposition is the same for each of the cases with reordering of subscripts.

Table 3.5.1 has been constructed so that the linear dependence included with a ternary may be readily eliminated by simple substitution and rearrangement of terms. Any link, with more than three joints, will be considered as if it were a series of ternaries, all using the same base.

TABLE 3.5.1 Ternary Links

TERNARY AND CASE	SUBSTITUTE FOR THESE PROPERTIES AND THEIR DERIVATIVES	
	LINEAR MOMENTUM	ANGULAR MOMENTUM $\begin{cases} n = 3 \\ m = 4 \end{cases}$ KINETIC ENERGY $\begin{cases} n = 5 \\ m = 6 \end{cases}$
1.1 pq(r) 1.2 qr(p) 1.3 pr(q) 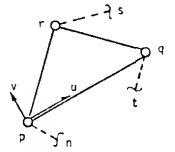	$D^1_{1rs} = D^2_{1rs} = D^2_{4sr}$ $D^1_{1rs} = D^2_{1pq}(a_{pq} - u_r) \div a_{pq} + D^2_{2pq}(v_r \div a_{pq})$ $+ D^2_{3pq}(-v_r \div a_{pq}) + D^2_{4pq}(u_r \div a_{pq})$ $D^2_{2rs} = D^2_{3sr}$ $D^2_{2rs} = D^2_{1pq}(-v_r \div a_{pq}) + D^2_{2pq}(a_{pq} - u_r) \div a_{pq}$ $+ D^2_{3pq}(u_r \div a_{pq}) + D^2_{4pq}(v_r \div a_{pq})$	$D^n_{1rs} = D^m_{1rs} = D^m_{4sr}$ $D^n_{1rs} = D^n_{1pq}((a_{pq} - u_r)^2 + v_r^2) \div a^2_{pq}$ $+ D^m_{2pq}(a_{pq}u_r - (u_r^2 + v_r^2)) \div a^2_{pq}$ $+ D^m_{3pq}(v_r \div a_{pq})$ $+ D^m_{4pq}(u_r^2 + v_r^2) \div a^2_{pq}$
2.1 pq(r) 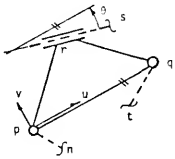	$D^1_{1pq} = D^2_{1pq}(-\cos\theta) \div a_{pq} + D^2_{2pq}(\sin\theta) \div a_{pq}$ $+ D^2_{3pq}(-\sin\theta) \div a_{pq} + D^2_{4pq}(\cos\theta) \div a_{pq}$ $D^1_{3sr} = D^2_{1pq}(\sin\theta) \div a_{pq} + D^2_{2pq}(\cos\theta) \div a_{pq}$ $+ D^2_{3pq}(-\cos\theta) \div a_{pq} + D^2_{4pq}(-\sin\theta) \div a_{pq}$	$D^n_{4sr} = D^m_{1pq} - D^m_{2pq} + D^m_{4pq}$
2.2 qr(p) 2.3 pr(q) 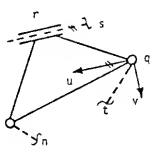	$D^1_{1pn} = D^2_{1pn} = D^2_{4np}$ $D^1_{1pn} = D^1_{1qr} + D^1_{2qr}(u_p) + D^1_{3qr}(v_p)$ $D^2_{2np} = D^2_{3pn}$ $D^2_{2pn} = D^1_{1qr} + D^1_{2qr}(u_p) + D^1_{3qr}(v_p)$	$D^n_{1pn} = D^m_{1pn} = D^m_{4np}$ $D^n_{1pn} = D^n_{1qr} + D^n_{2qr}(u_p)$ $+ D^n_{3qr}(v_p) + D^n_{4qr}(u_p^2 + v_p^2)$
3.1 pq(r) 3.3 pr(q) 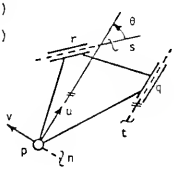	$D^1_{2sr} = D^1_{2pq}(\cos\theta) + D^1_{3pq}(\sin\theta)$ $D^1_{3sr} = D^1_{2pq}(-\sin\theta) + D^1_{3pq}(\cos\theta)$	$D^n_{4sr} = D^n_{4pq}$
3.2 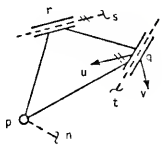	$D^1_{1pn} = D^1_{4np} = D^1_{1pn}$ $D^2_{1pn} = D^1_{1qr} + D^1_{2qr}(u_p) + D^1_{3qr}(v_p)$ $D^2_{2pn} = D^2_{3np}$	$D^n_{1pn} = D^m_{1pn} = D^m_{4np}$ $D^n_{1pn} = D^n_{1qr} + D^n_{2qr}(u_p)$ $+ D^n_{3qr}(v_p) + D^n_{4qr}(u_p^2 + v_p^2)$
4.1 pq(r) 4.2 qr(p) 4.3 pr(q) 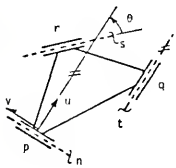	$D^1_{2sr} = D^1_{2pq}(\cos\theta) + D^1_{3pq}(\sin\theta)$ $D^1_{3sr} = D^1_{2pq}(-\sin\theta) + D^1_{3pq}(\cos\theta)$	$D^n_{4sr} = D^n_{4pq}$

3.6 Linear Momentum and its Derivatives

The equation for the general dynamic property of the four-link mechanism was shown to be Eq. (3.4.5). To balance a mechanism for a specific property, it is necessary only to substitute the definitions of the Y_{ipq} and the D_{ipq} from Chapter Two. For linear momentum, these definitions are found in Eq. (2.4.3). For the four-bar mechanism, the following are true

$\dot{U}_1 = \dot{V}_1 = \dot{U}_4 = \dot{V}_4 = 0$ (the fixed pivots do not move)

so that (see Appendix A)

$$D^2_{212} = D^2_{212} = 0$$

and

$D^2_{312} = D^2_{223}$; $D^2_{323} = D^2_{234}$ (the moving pin-joints have common velocities in neighboring links (see Appendix B)).

After substitution of these values in Eq. (3.4.5), the equation for the linear momentum of the four-bar is found to be

$$\underset{\sim}{L} = [Y^2_{412} + Y^2_{123}]D^2_{123} + [Y^2_{312} + Y^2_{223}]D^2_{223} + [Y^2_{423} + Y^2_{134}]D^2_{134} + [Y^2_{323} + Y^2_{234}]D^2_{234}.$$

The time derivative of this equation is the equation for the shaking force, $\underset{\sim}{F}_s$, of the mechanism. Complete shaking force balancing has been defined (see Refs. [10] and [5]) as forcing the total shaking force of a mechanism to be zero. This was accomplished in Ref. [5] by making the center of mass of the mechanism stationary. The complete balancing of the mechanism may be accomplished by forcing the four constant coefficients

of the D_{ipq} in the above equation to be equal to zero. If this is done and the definitions of the Y_{ipq} from Eq. (2.4.3) are substituted, the balancing conditions for the four-bar are

$$[Y^2_{412} + Y^2_{123}] = [(m_{12}u_{12}/a_{12}) + m_{23}(1 - u_{23}/a_{23})] = 0, \tag{3.6.1}$$

$$[Y^2_{312} + Y^2_{223}] = [(-m_{12}v_{12}/a_{12}) + m_{23}v_{23}/a_{23}] = 0, \tag{3.6.2}$$

$$[Y^2_{423} + Y^2_{134}] = [(m_{23}u_{23}/a_{23}) + m_{34}(1 - u_{34}/a_{34})] = 0, \text{ and} \tag{3.6.3}$$

$$[Y^2_{323} + Y^2_{234}] = [(-m_{23}v_{23}/a_{23}) + m_{34}v_{34}/a_{34}] = 0. \tag{3.6.4}$$

If it is presumed, as in Refs. [5] and [9], that the mass parameters of link 23 are known, then the location of the center of mass of link 12 is given from Eqs. (3.6.1) and (3.6.2)

$$u_{12} = - m_{23}(1 - u_{23}/a_{23})(a_{12}/m_{12}), \tag{3.6.5}$$

$$v_{12} = \frac{m_{23}v_{23}a_{12}}{a_{23}m_{12}}, \tag{3.6.6}$$

and, for link 34, from Eqs. (3.6.3) and (3.6.4)

$$u_{34} = (1 + \frac{m_{23}u_{23}}{a_{23}m_{34}})a_{34}, \text{ and} \tag{3.6.7}$$

$$v_{34} = \frac{m_{23}v_{23}a_{34}}{a_{23}m_{34}}. \tag{3.6.8}$$

These conditions are identical to the balancing conditions found in Refs. [5] and [10]. Hence, it is demonstrated that this new method agrees for the shaking force balancing of mechanisms as found previously by the author and others, Refs. [2], [5] and [10].

3.7 Total Momentum and its Derivatives

Again, Eq. (3.4.5) is the equation for the general dynamic property of a mechanism. If substitution of the definitions of the Y^3_{ipq} and the D^4_{ipq} is made, it can be shown that Eq. (3.4.5) is also of the same form

as the equation for total momentum of the mechanism. From the field of dynamics, it is known that the time derivative of the total angular momentum is equal to the sum of the moments exerted on the mechanism. This time derivative is recognized to be the shaking moment of the mechanism, or

$$\underset{\sim}{M}_o = \underset{\sim}{T}_d^i + \underset{\sim}{r}_m \times \underset{\sim}{F}_m \tag{3.7.1}$$

where

$\underset{\sim}{M}$ is the shaking moment,

$\underset{\sim}{T}$ is the inertial driving torque or torques supplied to the inputs of the mechanism,

$\underset{\sim}{r}_m$ is the vector locating the mth fixed pivot,

$\underset{\sim}{F}_m$ is the force exerted on the mechanism by the mth pivot, and

$\underset{\sim}{r}_m \times \underset{\sim}{F}_m$ is the moment about the origin exerted by the forces.

If it is desired to completely balance the shaking moment of the four-bar (achieve $\underset{\sim}{M}_0 = 0$ for the entire cycle), it is necessary only to force each of the constant terms of Eq. (3.4.5) to be zero. In order to accomplish this, each of the constant terms of Eq. (3.4.5) are separately set to be zero and the definitions of the Y^3_{ipq} from Eq. (2.5.3) are substituted

$$Y^3_{212} = (m_{12}u_{12}/a_{12}) - m_{12}(k_{12}^2 + u_{12}^2 + v_{12}^2)/a_{12}^2 = 0, \tag{3.7.2}$$

$$Y^3_{312} = m_{12}v_{12}/a_{12} = 0, \tag{3.7.3}$$

$$Y^3_{412} + Y_{123} = m_{12}(k_{12}^2 + u_{12}^2 + v_{12}^2)/a_{12}^2 + m_{23}(1 - u_{23}/a_{23}) + m_{23}(k_{23}^2 + u_{23}^2 + v_{23}^2)/a_{23}^2 = 0, \tag{3.7.4}$$

$$Y^3_{223} = (m_{23}u_{23}/a_{23}) - m_{23}(k_{23}^2 + u_{23}^2 + v_{23}^2)/a_{23}^2 = 0, \tag{3.7.5}$$

$$Y^3_{323} = m_{23}v_{23}/a_{23} = 0, \tag{3.7.6}$$

$$Y^3_{423} + Y^3_{134} = m_{23}(k^2_{23} + u^2_{23} + v^2_{23})/a^2_{23} + m_{34}(1 - u_{34}/a_{34}) + m_{34}(k^2_{34} + u^2_{34} + v^2_{34})/a^2_{34} = 0, \quad (3.7.7)$$

$$Y_{234} = (m_{34}u_{34}/a_{34}) - m_{34}(k^2_{34} + u^2_{34} + v^2_{34})/a^2_{34} = 0, \text{ and} \quad (3.7.8)$$

$$Y_{334} = m_{34}v_{34}/a_{34} = 0. \quad (3.7.9)$$

If each of Eqs. (3.7.3), (3.7.6) and (3.7.9) must be zero and if each of the links are physically real, then the only possible choice is to make each of the v_{12}, v_{23}, and v_{34} equal to zero. If this is compared with Eqs. (3.6.6) and (3.6.8) from the shaking force balancing, it is apparent that, with the v-coordinate zero, the shaking force and shaking moment locations are the same for all three links. Further, if Eq. (3.7.5) is solved for $(m_{23}u_{23}/a_{23})$, the result substituted into Eqs. (3.7.4) and (3.7.7), these equations solved for $m_{12}(k^2_{12} + u^2_{12} + v^2_{12})/a_{12}$ and $m_{34}(k^2_{34} + u^2_{34} + v^2_{34})$, these results substituted into Eqs. (3.7.2) and (3.7.8) respectively, then the resulting equations may be solved for u_{12} and u_{34} as

$$u_{12} = -m_{23}(1 - u_{23}/a_{23})a_{12}/m_{12}, \text{ and}$$

$$u_{34} = (1 + \frac{m_{23}u_{23}}{u_{23}m_{34}})a_{34}.$$

These results are exactly equal to Eqs. (3.6.5) and (3.6.6), the criteria for the shaking force balancing of the four-bar. Thus, it is demonstrated that complete shaking moment balancing of a mechanism ensures complete shaking force balancing of the mechanism. Of the three remaining balancing conditions, Eq. (3.7.5) is relatively easy to accomplish since this is the requirement that link 23 is a physical pendulum. This requires that the link have the same total moment of inertia about either of the pivots, 2 or 3.

The remaining two balancing conditions, Eqs. (3.7.4) and (3.7.7), are the most difficult to achieve. They can be used to determine (supposing that the mass parameters of link 23 have been fixed) the moments of inertia of links 12 and 34 about fixed pivots 1 and 4, respectively. It appears that these two conditions require that the sum of two positive numbers be zero. Because of this, it becomes necessary to introduce the concept of "negative" inertia. For shaking moment balancing, negative inertia can be simulated by adding a body which counter-rotates with some existing body. In Ref. [3], this was achieved by adding a gear pair to the chain for exact balancing and in Ref. [10], by adding a dyad (pair of links) which simulated a gear pair over a small range of motion for approximate balancing. If it is presumed that this negative inertia will be used as shown in Fig. (3.7.1), then Eqs. (3.7.4) and (3.7.7) must be modified by the addition of a balancing inertia to satisfy

$$m_{12}(k_{12}^2 + u_{12}^2 + v_{12}^2)/a_{12}^2 + m_{23}(1 - u_{23}/a_{23})$$
$$+ m_{23}(k_{23}^2 + u_{23}^2 + v_{23}^2)/a_{23}^2 - \overline{I}_5/a_{12}^2 = 0, \text{ and}$$
$$m_{23}(k_{23}^2 + u_{23}^2 + v_{23}^2)/a_{23}^2 + m_{34}(1 - u_{34}/a_{34})$$
$$+ m_{34}(k_{34}^2 + u_{34}^2 + v_{34}^2)/a_{34}^2 - \overline{I}_6/a_{34}^2 = 0,$$

where $\overline{I}_5$ and $\overline{I}_6$ are the rotary inertias of a pair of gears, as shown in Fig. (3.7.1). So, at the cost of the addition of two pairs of gears, it is possible to completely eliminate the shaking moment and shaking force of a four-bar linkage. In general, it will be necessary to add negative inertia gear pairs to any mechanism which is to be balanced in order to completely eliminate shaking moment.

Note that the last six of the eight equations, Eqs. (2.7.2) through (3.7.9), are exactly those balancing conditions for complete moment

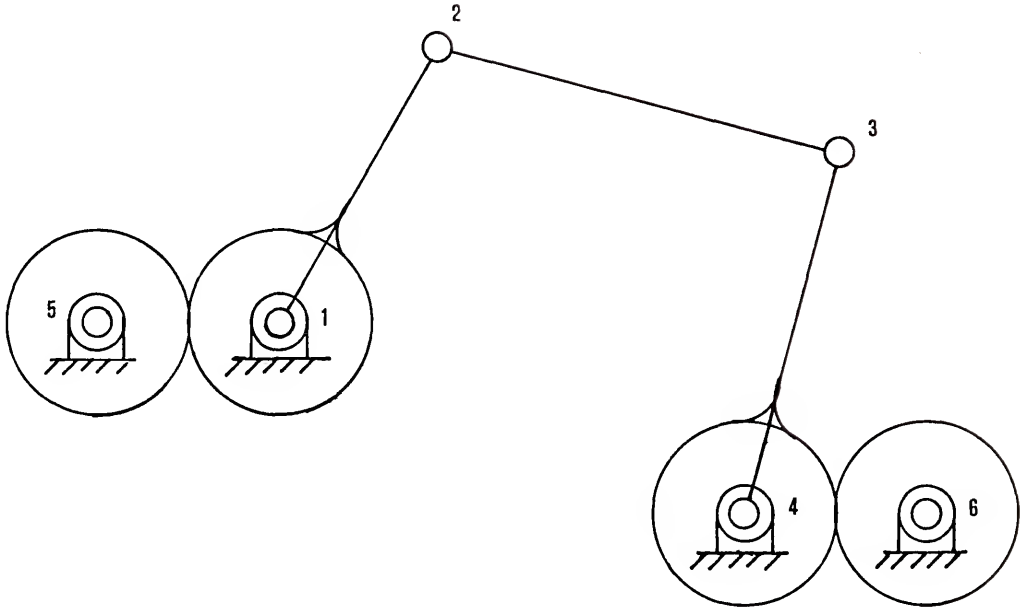

FIG. 3.7.1 A Four-Bar with Two Negative Inertia Gear Pairs

balancing of the four-bar as found in Ref. [9]. It is now understood that the reason that only six balancing conditions were found in Ref. [9] is that a special reference was taken at the center of the input link to derive the balancing conditions found in that work.

Thus far, it has been shown that it is possible to completely balance a four-bar mechanism for shaking moment and that this balancing includes the complete shaking force balancing of the mechanism. This is equivalent to making the specification of the column [S] of Eq. (3.4.3) as a column of eight zeros. If it is decided that this complete balancing is not desirable, perhaps because of the negative inertia requirements or other unattractive link configurations, it is possible to specify [S] as eight non-zero values and to solve for the required values of the constants of Eq. (3.4.5). This may result in more attractive links and will satisfy exactly the specified values of [S].

3.8 Kinetic Energy and its Derivatives

The substitution of the definitions of the Y_{ipq} and the D_{ipq} from Eq. (2.6.3) into Eq. (3.4.5) yields the equation for the total kinetic energy of the four-bar. If it is recognized that, for the four-bar

$$\dot{U}_1 = \dot{V}_1 = \dot{U}_4 = \dot{V}_4 = D^6_{212} = D^6_{312} = D^6_{234} = D^6_{334} = 0$$

(see Appendix B) then the controlling equation becomes

$$E^i = [Y^3_{412} + Y^3_{123}]D^6_{123} + Y^3_{223}D^6_{223} + Y^3_{323}D^6_{323} + [Y^3_{423} + Y^3_{134}]D^6_{134}. \quad (3.8.1)$$

In this equation, the kinetic energy of a four-link mechanism is determined by the sum of four terms. The time derivative of this equation is the inertia power required to drive the mechanism. An ideally balanced mechanism should appear as a flywheel to its prime mover; this would mean

that a mechanism operating at constant speed would require no energy input (in the absence of friction) to maintain its speed. If the derivative of Eq. (3.8.1) is taken the result is

$$P^i = Y^3_{223}\dot{D}^6_{223} + Y^3_{323}\dot{D}^6_{325} + [Y^3_{423} + Y^3_{134}]\dot{D}^6_{134} \tag{3.8.2}$$

since

$$\dot{D}^6_{123} = \dot{U}_2\ddot{U}_2 + \dot{V}_2\ddot{V}_2 = a_{12}\dot{\gamma}_{12}\ddot{\gamma}_{12} = 0$$

for a mechanism operating at constant input crank speed. In order for this mechanism to have zero power input, it is sufficient to force the three constant coefficients of Eq. (3.8.2) to be equal to zero. If this is done and the definitions of the Y^3_{ipq} substituted from Eq. (2.5.3), the resulting conditions are

$$Y^3_{223} = (m_{23}u_{23}/a_{23}) - m_{23}(k^2_{23} + u^2_{23} + v^2_{23})/a^2_{23} = 0, \tag{3.8.3}$$

$$Y^3_{323} = m_{23}v_{23}/a_{23} = 0, \text{ and} \tag{3.8.4}$$

$$Y^3_{423} + Y^3_{134} = m_{23}(k^2_{23} + u^2_{23} + v^2_{23})/a^2_{23} + m_{34}(1 - u_{34}/a_{34}) + m_{34}(k^2_{34} + u^2_{34} + v^2_{34})/a^2_{34} = 0. \tag{3.8.5}$$

Observe that these three equations are exactly the same as Eqs. (3.7.5), (3.7.6), and (3.7.7). However, any attempt to satisfy Eq. (3.8.5) with negative inertia results in an increase in the power required to drive the mechanism. This is best illustrated by writing the power equation of the mechanism with a gear pair added to provide negative inertia. Consider the mechanism in Fig. (3.7.1), the equation for the power of this device is

$$P^i = Y^3_{223}\dot{D}^6_{223} + Y^3_{323}\dot{D}^6_{323} + [Y^3_{423} + Y^3_{134} + \bar{I}_6/a_{34}]\dot{D}^6_{134}.$$

If this equation is compared with Eq. (3.8.2), the power equation for the unbalanced mechanism, it is seen that the difference is the addition of the positive number, $\overline{I}_6/a_{34}^2$. The addition of the balancing gear pair can only increase the power required to drive the mechanism. The above argument holds equally well for the inertia driving torque of the device since the inertia power and the inertia driving torque are related by

$p^i = T_d^i \omega_i$, ω_i = input speed.

At times, it will appear to be advisable to attempt to balance for non-zero driving torque or power. When this is the case, it will be possible to balance for up to four specified values of the dynamic property if the mechanism has an accelerating input crank. The dynamic property which the system is to satisfy can be kinetic energy or any of its derivatives.

3.9 Reaction Moment

It was demonstrated in Section 2.7 that the shaking moment, the inertia driving torque, and reaction moment are related by Eq. (3.7.1). This leads to the conclusion that the equation for the reaction moment may be found as

$$\underset{\sim}{M}_0^r = \underset{\sim}{r}_m \times \underset{\sim}{F}_m = \underset{\sim}{M}_0 - \underset{\sim}{T}_d^i.$$

The equation for a general dynamic property, Eq. (3.4.5), is still applicable in this instance if two new D_{ipq}'s are defined as

$$D_{ipq}^7 = \dot{D}_{ipq}^3 - (D_{ipq}^5)'$$

and

$$D_{ipq}^8 = \dot{D}_{ipq}^4 - (D_{ipq}^6)'$$

where D^n_{ipq}, n = 3, 4, 5, 6, are defined in Eqs. (2.5.4), (2.5.5), (2.6.4), and (2.6.5). This allows the writing of the equation for reaction moment for the four-bar in the form

$$\underset{\sim}{M}^r_0 = Y^3_{223}D^8_{223} + Y^3_{323}D^8_{323} + [Y^3_{423} + Y^3_{134}]D^8_{134} + Y^3_{234}D^8_{234} + Y^3_{334}D^8_{334} + [Y^3_{412} + Y^3_{123}]D^8 + Y^3_{212}D^8_{212} + Y^3_{312}D^8_{312}. \tag{3.9.1}$$

3.10 Theorems For Balancing Mechanisms

In Chapter One, reference was made to the theorem on shaking force balancing of mechanisms as stated by Tepper and Lowen [26]. In this section, it is proposed that the theorem be revised or that a new theorem be advanced. This theorem is a result of the form of the equations for the dynamic properties of mechanisms. The theorem as previously stated in the literature deals only with the shaking force balancing of mechanisms. It is proposed that the theorem be changed to read:

THEOREM

> A planar mechanism without axisymmetric link groupings can be fully balanced for any dynamic property by internal mass redistribution or the addition of "negative inertia" if, and only if, from each link there is a contour to the ground by way of revolute joints only.

The phrase "fully balanced" has the same meaning as that for completely balanced which has been used throughout this work; i.e., to force the value of some dynamic property or combination of properties to be zero for the complete cycle of the mechanism regardless of position or dynamic input state.

As proof of this theorem, consider Fig. 3.10.1 which is a group of three links considered to be part of some mechanism which is connected at p and r to the rest of the mechanism. The generalized equation for a dynamic property of the mechanism containing these links will be:

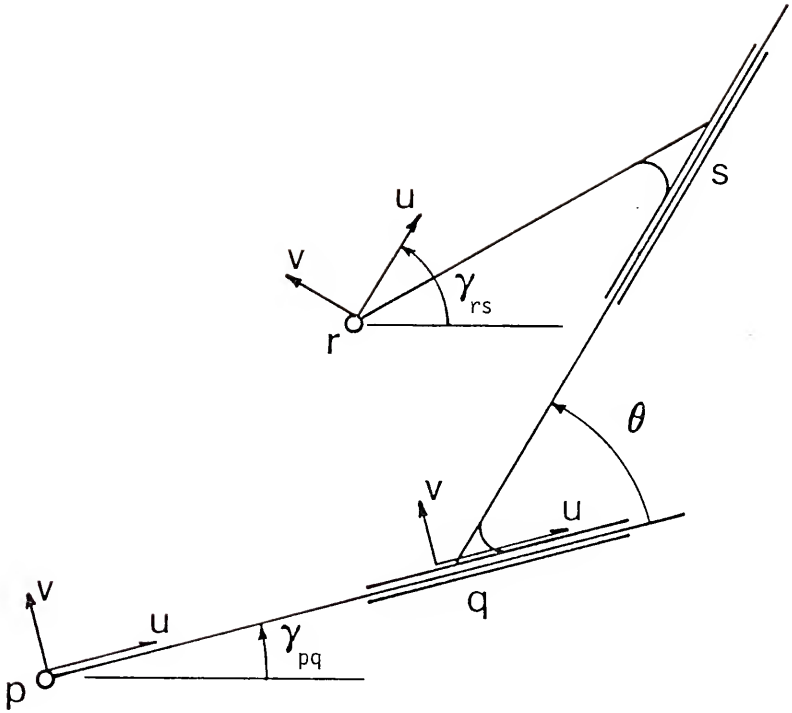

FIG. 3.10.1 Three Links Joined Only by Sliding Joints

$$
\begin{aligned}
S = {} & Y_{1pq}D_{1pq} + Y_{2pq}D_{2pq} + Y_{3pq}D_{3pq} + Y_{4pq}D_{4pq} && \text{(link pq)} \\
& + Y_{1qs}D_{1qs} + Y_{2qs}D_{2qs} + Y_{3qs}D_{3qs} + Y_{4qs}D_{4qs} && \text{(link qs)} \qquad (3.10.1) \\
& + Y_{1rs}D_{1rs} + Y_{2rs}D_{2rs} + Y_{3rs}D_{3rs} + Y_{4rs}D_{4rs} && \text{(link rs)} \\
& + \text{other terms for other links in the mechanism.}
\end{aligned}
$$

Since D_{1pq} and D_{1rs} will combine with elements due to components from other links, they will be lumped here and ignored. Also in this case, by definition

$$D_{4pq} = D_{4qs} = D_{4rs} = f(\ddot{\gamma}_{pq} = \dot{\gamma}_{rs} = \gamma_{qs}).$$

This is true regardless of the dynamic property in question. After these observations, Eq. (3.10.1) reduces to

$$
\begin{aligned}
S = {} & Y_{2pq}D_{2pq} + Y_{2rs}D_{2rs} + Y_{2qs}D_{2qs} \\
& + Y_{3pq}D_{3pq} + Y_{3rs}D_{3rs} + Y_{3qs}D_{3qs} \\
& + [Y_{4pq} + Y_{4rs} + Y_{4qs}]D_{4pq} + Y_{1qs}D_{1qs} + \text{other terms.}
\end{aligned}
$$

This is the appropriate equation for the balancing of the triad of links of the mechanism shown. If the property in question is angular momentum, kinetic energy or any of their derivatives, the mechanism may be fully balanced by making all of the constant coefficients go to zero. All of the Y_{2pq} and Y_{3pq} may be made to be zero by choosing u_{pq} and v_{pq} equal to zero. The constant coefficient of D_{4pq} may be made to be zero for angular momentum if some form of negative inertia (even though it is unattractive) can be used. It cannot be made zero for kinetic energy. Therefore, this mechanism cannot be fully balanced for kinetic energy or its derivatives. In either case, note that Y_{1qs} appears alone in this equation; it is defined as $Y^1_{1qs} = m_{qs}$. Clearly to make $Y^1_{1qs} = 0$ would require that a physical link be constructed with zero mass. Therefore, a mechanism

containing this link triad cannot be fully balanced for angular momentum or its derivatives. This requirement for zero mass links holds also for balancing for kinetic energy and further precludes balancing for that property.

If the dynamic property in question is linear momentum, further combining of terms is necessary. For the orientation of the three moving reference systems as shown in Fig. 3.10.1, the angles of the three links are related as follows:

$$\gamma_{pq} = \gamma_{qs}, \text{ and}$$
$$\gamma_{rs} = \gamma_{pq} + \theta = \gamma_{qs} + \theta$$

and their time derivatives

$$\dot{\gamma}_{pq} = \dot{\gamma}_{rs} = \dot{\gamma}_{qs}$$

are all the same. From this information and the definitions of the D^1_{ipq} of Eq. (2.4.2), it is possible to determine that (see Appendix B)

$$D^1_{2pq} = D^1_{2qs}; D^1_{3pq} = D^1_{3qs}; \; D^1_{4pq} = D^1_{4qs} = D^1_{4rs} = 0,$$

and that (see Appendices A and B)

$$D^1_{2rs} = \cos D^1_{2pq} + \sin D^1_{2pq}, \text{ and}$$
$$D^1_{3rs} = - \sin D^1_{2pq} + \cos D^1_{3pq}.$$

Substitution of the above into Eq. (3.10.2) yields

$$\begin{aligned} \underset{\sim}{F}_s = {} & [Y^1_{2pq} + Y^1_{2qs} + \cos Y^1_{2rs} - \sin Y^1_{3rs}]D^1_{2pq} \\ & + [Y^1_{3pq} + Y^1_{3rs} + \sin Y^1_{2rs} + \cos Y^1_{3rs}]D^1_{3pq} \\ & + [Y^1_{1qs}]D^1_{1qs} + \text{other terms for other links in the mechanism.} \end{aligned}$$

Again, to fully force balance the mechanism, it is necessary only to force the constant coefficients (in brackets) of this equation to be zero. The coefficients of D^1_{2pq} and D^1_{2pq} can easily be forced to zero. However, Y^1_{1pq} appears alone again; making it zero would require that a physical link be constructed with zero mass. Since this is true, it is impossible to balance the given mechanism for linear momentum or its derivatives. Shaking force is the time derivative of the linear momentum of the mechanism. The above conclusion for linear momentum was proved by Tepper and Lowen [26] and is a special case of the above theorem. It is readily apparent, then, that the above theorem, in its revised form, holds true for all of the dynamic properties of a mechanism that contains link series (i.e., the link triad) which makes reaching ground through revolutes from all sliding pairs impossible.

3.11 Mixed Criteria and Balancing Options

Since the shaking force criterion is a subset of the shaking moment criteria, it follows that one cannot balance for specified non-zero values of shaking moment and then for specified non-zero values of shaking force, or vice versa. It is also obvious that, since the balancing conditions for driving torque are a subset of those for shaking moment, that it is not possible to balance for either torque or shaking moment and then to balance for the other. It is possible, however, to balance for non-zero specification of inertia driving torque and then to balance for specified shaking force for the same positions and to exactly satisfy both sets of specifications. Since both of the cases mentioned above are encompassed in the balancing for reaction moment, it is clear that a mechanism cannot be balanced for reaction moment and any other of the dynamic properties.

In Ref. [10], Elliott and Tesar have defined the concept of balancing for multiply-separated non-zero conditions for shaking moment and inertia driving torque. If this concept is extended to balancing for general dynamic properties, it becomes obvious that one can balance, say, for the kinetic energy (and the inertia driving torque) of a mechanism. The specification of the values of energy (and torque) may be made at the same position of the mechanism or at different positions. It is possible to balance only for the same number of conditions that could be balanced for if one were balancing in either property alone since the number of positions or specifications which can be made is the same as the number of unknowns in the dynamic equation which remains the same whether derivatives are taken or not. This type of balancing of a mechanism would allow the control of both energy content of the mechanism or the tailoring of the mass content of the mechanism to suit some available energy source. All of the above analytical methods allow the development of a few rules of thumb or predictors.

It was shown in Chapter Two that there are four mass parameters (m, u, v, k) in each moving link of a linkage system. For balancing, it becomes desirable to know or to be able to predict the number of mass parameters in the system, the number of specifications of dynamic property which can be made, and the number of mass parameters remaining for optimization. It is possible to formulate rules or equations to provide this information. If n is taken as the number of links in a given kinematic chain, the number of mass parameters available for balancing is found to be

$$Q = 4(n - 1) \tag{3.11.1}$$

where Q is the total number of mass parameters in the system. If j is taken as the number of lower-pair connectors (pin-joints or sliders) in a given chain, then the number of positions or values of the various dynamic properties is found as,

$$S_1 = Q - j, \tag{3.11.2}$$

$$S_2 = Q - 2j, \text{ and} \tag{3.11.3}$$

$$S_3 = Q - j - 2f \tag{3.11.4}$$

where

S_1 is the number of specifications possible in total momentum and its derivatives,

S_2 is the number of specifications possible in linear momentum and its derivatives,

S_3 is the number of specifications possible in kinetic (inertial) energy and its derivatives, and

f is the number of fixed pivots in the mechanism, both pin-joints and sliders.

These S_i are the maximum number of specifications which can be made if a closed form exact solution to the non-zero balancing specifications is desired. If this number of specifications has been made then the number of design parameters available for optimization are found with the following equation:

$$P_i = Q - S_i - P_q, \; i = 1, 2, 3$$

where P_q is the number of grounded sliders. The P_i can be found more specifically as

$$P_1 = j - P_q, \tag{3.11.5}$$

$$P_2 = 2j - P_q, \text{ and} \tag{3.11.6}$$

$$P_3 = j + 2f - P_q. \tag{3.11.7}$$

The last bit of information which can be gleaned from the kinematic chains is the maximum number of prismatic or sliding pairs that can be contained in a kinematic chain to be completely balanced for shaking force or shaking moment. This maximum number of sliding pairs is found by inspection to be

$$P_M = (j + 1) - n. \tag{3.11.8}$$

This is the maximum number of sliding pairs that can be contained in the kinematic chain without violating the theorem of Section 3.10, for all of the mechanisms derived from the given chain. This is the maximum number tolerable; it is still necessary to examine individually each mechanism with more than one slider to determine that it has not violated the theorem by isolating a slider or sliders from ground.

When using the above results, it should be noted that it is possible to balance for kinetic energy (or its derivatives) and then for linear momentum (or its derivatives). If this dual balancing is done, it has the desirable effects of reducing the number of design parameters available to the designer to optimize the system. In some mechanisms, this dual balancing will be more restrictive than the balancing for shaking moment alone as can be seen from the following equation which will predict the number of parameters remaining for optimization for the dual balancing case

$$P_{23} = Q - (S_2 + S_3) = 3j + 2f - Q - P_q. \tag{3.11.9}$$

3.12 Calculation of Counterweights

The balancing methods of the previous chapter return the proper values of the mass parameters in order to satisfy the specified values of a dynamic property. If the balancing has been undertaken for a mechanism that does not exist except as kinematic dimensions, then it appears that all the designer has to do is to locate the mass of the mechanism in each of the links to satisfy those requirements. If, however, the balancing has been done for a mechanism that already exists, whose mass content is known in advance, it becomes necessary to calculate for each link the counterweight mass and location to properly balance the mechanism. This relatively simple procedure has been presented in Ref. [9] and is repeated here. Let Fig. 3.12.1a represent the original unbalanced link and Fig. 3.12.1b represent the balanced link with its mass content such that it satisfies the balancing requirements. Then the locations of the mass content for the counterweights, as shown in Fig. 3.12.1c, may be calculated using the following:

$$m^c = m^b - m^u, \tag{3.12.1}$$

$$u^c = (m^b u^b - m^u u^u)/m^c, \text{ and} \tag{3.12.2}$$

$$v^c = (m^b v^b - m^u v^u)/m^c \tag{3.12.3}$$

and the required radius of gyration of the counterweight is found as

$$k^c = [\frac{I^b - I^u}{m^c} - u_c^2 - v_c^2]^{1/2} \tag{3.12.4}$$

where

m^b, u^b, v^b, and k^b are the balanced mass parameters,

m^u, u^u, v^u, and k^u are the original unbalanced mass parameters, and

m^c, u^c, v^c, and k^c are the counterweight mass parameters.

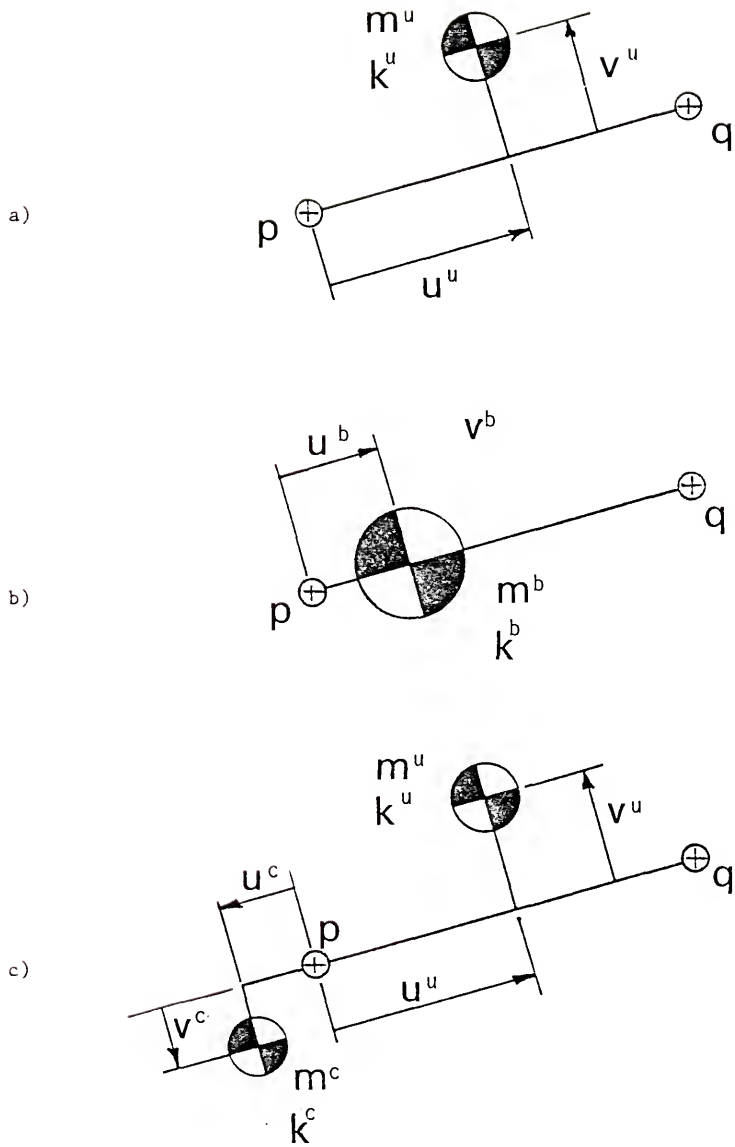

FIG. 3.12.1 Counterweight Mass Parameters

Note that $I = m(u^2 + v^2 + k^2)$ is referenced to the same pin joint p for mass parameters such as u, v, k. Fulfillment of these conditions will achieve the proper placement of the counterweights to balance the mechanism.

If some dynamic property other than the linear momentum or its derivatives is being undertaken, then it will be necessary to calculate a value for the addition of "negative inertia." A grounded link with its associated negative inertia requirement is shown in Fig. 3.5.1. The requirement for the inertia of this balancer will be found from

$$Y_{ipq} + Y_{irs} - I_g/a_{pq}^2 = X$$

where

Y_{ipq}, Y_{irs} are some of the constant coefficients as found in Chapter Two,

X is the result returned by the solution of the equations [see Eqs. (3.4.3) or (3.4.6)], and

I_g is the moment of inertia of the counter rotating balancing gear.

This equation may be solved for I_g as

$$I_g = (X + Y_{ipq} + Y_{irs})a_{pq}^2. \tag{3.12.5}$$

It remains only to calculate the radius of gyration of the gears where this parameter is involved in the balancing.

3.13 Approximate Balancing

In Chapter Two, the equations for the dynamic properties of mechanisms were developed in several forms. In the preceding sections of this chapter, a method of exactly balancing any mechanism was described. In this section, use will be made of the special forms of the equations that were developed previously to illustrate possible methods of balancing mechanisms in the approximate sense.

The first of these makes use of a readily available tool, the matrix inversion capabilities of the APL computer language. This allows one to overspecify the dynamic property which is being controlled; i.e., the vector [S] of Eq. (3.4.3) is specified in more positions than that allowed by Eqs. (3.11.2) (3.11.3) or (3.11.4) and the matrix inversion operation is carried out. This results in the solution of the equations in a least square-sense. This means that X_m returned by this process will satisfy the specified values of the dynamic property in a least-square sense only. This method was used in [10] and was beneficial in that it allowed considerable smoothing of the shaking moment of a mechanism without the expected penalty of a 300 percent increase in inertia driving torque. At times, it appears that this may be a better method to use in the balancing of mechanisms than the exact method that is described earlier in this chapter.

It is hoped that further development of various approximation techniques will be carried out by future researchers since the equations presented in this work are given in their definitive forms. The equation for each dynamic property is expressed as a sum of a series of terms. Each term consists of a constant multiplier, the Y_{ipq} or X_m, and a kinematic variable, the D_{ipq}. Since this is the case, the dynamics of the mechanism is separated completely from the kinematics (or geometry) for purposes of analysis.

CHAPTER FOUR

EXAMPLES

4.1 Purpose

The purpose of this chapter is to expose the reader to the use of the methods as developed in the previous chapter. This will be done through the treatment of a numerical and a non-numerical example. During the development of these examples, certain special cases and considerations will be pointed out. Towards the end of the chapter, certain rules of thumb will be developed and listed for the user's convenience. The examples, wherever possible, are taken from existing literature or from industrial problems. The main concept that should become clear to the reader, as progress is made through the chapter, is the ease of application of the method and the fact that it can be applied to any problem which is kinematically analyzable. The restrictions or assumptions for the method are stated again here:

1. The kinematic representation of the mechanism must exist.
2. A method of analysis of the mechanism exists. This analysis may be based on the kinematics of the mechanism assuming rigid links. If an existing mechanism is to be redesigned, the analysis of the motion may be taken from the mechanism itself with the appropriate instrumentation.

4.2 An Eight-Bar Linkage

The mechanism shown in Fig. 4.2.1 was designed and built for use in the textile industry. In the original prototype, all of the links were made of steel. When this mechanism was run at its design speed of 3500 rpm, the bronze sleeve bearings in the pin-joints, particularly those in and near the input, failed after a few hours of operation. A new version of the mechanism was constructed with links of aluminum. This version appeared to have a longer life. The dimensions of the links and the mass parameters of the aluminum links are listed in Table 4.2.1.

At the time that the problem became available to this researcher, the designer of this linkage was still concerned with the life of the bronze bearings. The observable dynamic property, which was to be controlled in the linkage, was the inertia driving torque, as severe torque reversals were evident. The designer hypothesized that these would lead to severe force reversals in the pin-joints of the mechanism which would lead to early failure of the bearings due to high shock loadings. The object of the balancing then was to reduce the variation in energy content of the mechanism in order to reduce the severe torque reversals and therefore increase the life of the bearings of the mechanism.

Equations (3.11.1) and (3.11.4) can be used to predict the quality of balancing which may be expected for the mechanism. For the given mechanism in Fig. 4.2.1, the pertinent parameters are the number of moving links, $n = 8$; the total number of pin-joints, $j = 10$; and the number of fixed or grounded pin-joints, $f = 4$. Using this information, Eq. (3.11.1) indicates that the number of mass parameters in the mechanism is

$$Q = 4(n - 1) = 4(8 - 1) = 28.$$

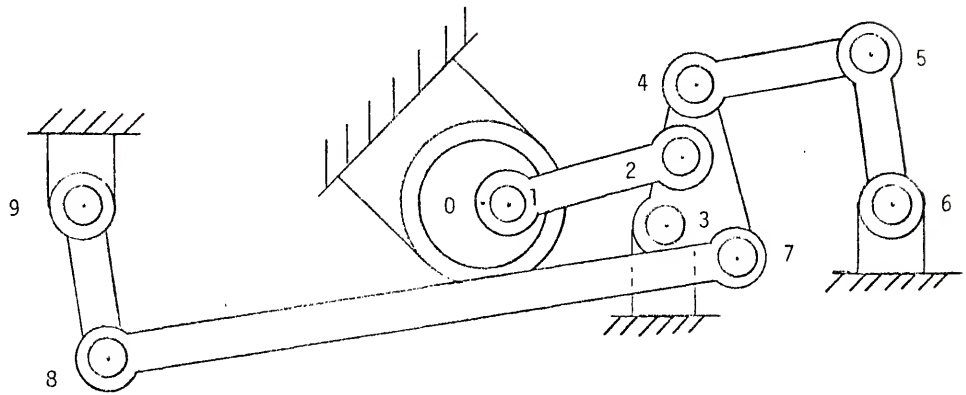

FIG. 4.2.1 Eight-Bar Example

TABLE 4.2.1 Mass Parameters for the Links of the Eight-Bar

LINK pq	LOCATION OF CENTER OF GRAVITY u_{pq}	v_{pq}	MASS m_{pq}	CENTROIDAL MOMENT OF INERTIA $m_{pq}k_{pq}^2$	LINK LENGTH a_{pq}
01	0.187	0	0.00057	0.0000032	0.187
12	0.156	0.025	0.00011	0.000032	1.25
34	0.334	-0.140	0.00014	0.000033	1.00
45	0.625	0	0.000046	0.000011	1.25
56	0.216	0	0.00036	0.000117	1.05
78	2.101	0.217	0.00014	0.00028	4.375
89	0.216	0	0.00036	0.00012	1.05

Equation (3.11.4) predicts the number of specifications which may be made in kinetic energy (or its derivatives) as

$$S_3 = Q - j - 2f = 28 - 10 - 8 = 10.$$

This means that the energy level of the device can be specified at ten positions of the input crank or 36° intervals. Because of this result, it was expected that significant improvement could be made in the dynamics of the mechanism.

The next step in the balancing of the mechanism was to develop the specific equation for the kinetic energy of the mechanism. The kinetic energy of the mechanism is found as

$$E^i = \sum_{pq} \sum_{i=1}^{4} Y^6_{ipq} D^6_{ipq}$$

and, using the notation of Fig. 4.2.1, yields

$$\begin{aligned}
E^i = {} & Y^3_{101}D^6_{101} + Y^3_{201}D^6_{201} + Y^3_{301}D^6_{301} + Y^3_{401}D^6_{401} && \text{(link 01)} \\
& + Y^3_{112}D^6_{112} + Y^3_{212}D^6_{212} + Y^3_{312}D^6_{312} + Y^3_{412}D^6_{412} && \text{(link 12)} \\
& + Y^3_{123}D^6_{123} + Y^3_{221}D^6_{221} + Y^3_{323}D^6_{323} + Y^3_{423}D^6_{423} && \text{(link 23)} \\
& + Y^3_{145}D^6_{145} + Y^3_{245}D^6_{245} + Y^3_{345}D^6_{345} + Y^3_{445}D^6_{445} && \text{(link 45)} \qquad (4.2.1) \\
& + Y^3_{156}D^6_{156} + Y^3_{256}D^6_{256} + Y^3_{356}D^6_{356} + Y^3_{456}D^6_{456} && \text{(link 56)} \\
& + Y^3_{178}D^6_{178} + Y^3_{278}D^6_{278} + Y^3_{378}D^6_{378} + Y^3_{478}D^6_{478} && \text{(link 78)} \\
& + Y^3_{189}D^6_{189} + Y^3_{289}D^6_{289} + Y^3_{389}D^6_{389} + Y^3_{489}D^6_{489} && \text{(link 89).}
\end{aligned}$$

However, from the definitions of the D^6_{ipq} in Eq. (2.6.3) and the knowledge of the kinematics of the mechanism,

$$U_p = V_p = 0; \; p = 0, 3, 6, 9$$

for the fixed pivots, it is known that (see Appendix A)

$$D^6_{201} = D^6_{223} = D^6_{256} = D^6_{289} = 0,$$

$$D^6_{301} = D^6_{323} = D^6_{356} = D^6_{389} = 0, \text{ and}$$

$$D^6_{101} = D^6_{123} = D^6_{456} = D^6_{489} = 0.$$

Further, from the fact that certain of the pin-joints, 1, 2, 5, and 8, are shared between links, it is observed that

$$D^6_{401} = D^6_{112};\ D^6_{412} = D^6_{423};\ D^6_{456} = D^6_{445};\ D^6_{478} = D^6_{189}.$$

Substitution of the above information into Eq. (4.2.1) yields a much reduced equation

$$\begin{aligned} E^i = {} & Y^3_{212}D^6_{212} + Y^3_{245}D^6_{245} + Y^3_{278}D^6_{278} \\ & + Y^3_{312}D^6_{312} + Y^3_{345}D^6_{345} + Y^3_{378}D^6_{378} \\ & + [Y^3_{401} + Y^3_{112}]D^6_{112} + [Y^3_{412} + Y^3_{123}]D^6_{123} \\ & + [Y^3_{445} + Y^3_{156}]D^6_{156} + [Y^3_{478} + Y^3_{189}]D^6_{189} \\ & + Y^3_{145}D^6_{145} + Y^3_{178}D^6_{178}. \end{aligned} \tag{4.2.2}$$

This equation has twelve terms, two more than was predicted by Eq. (3.11.4). The extra two terms are the last two in Eq. (4.2.2). These terms are concerned with the motion of the pin-joints which are connected to the quaternary link 2374. They must be combined with the terms from the base of the quaternary 23 as was shown in Section 3.5. The quaternary is treated as two ternaries 234 and 237 and substitutions are made using Table 3.5.1. To use the table, each ternary is treated separately. The first ternary becomes a case 1.1 ternary with the substitutions $p = 2$, $q = 3$, and $r = 4$ being made for the pin-joints. With this information, the table yields

$$D^6_{145} = D^6_{123}[(a_{23} - u_4)^2 + v_4^2]/a^2_{23}. \tag{4.2.3}$$

The second ternary is also a case 1.1 ternary and the substitutions, p = 2, q = 3, and r = 7, apply for the pin-joints. With this information, the table yields

$$D^6_{178} = D^6_{123}[(a_{23} - u_7^2) + v_7^2]/a_{23}^2. \tag{4.2.4}$$

After the substitution of the results represented by Eqs. (4.2.3) and (4.2.4) into Eq. (4.2.2), the final reduced equation for the kinetic energy of the mechanism is found to be

$$\begin{aligned} E^i = {} & Y^3_{212}D^6_{212} + Y^3_{245}D^6_{245} + Y^3_{278}D^6_{278} + Y^3_{312}D^6_{312} + Y^3_{345}D^6_{345} \\ & + Y^3_{378}D^6_{378} + [Y^3_{401} + Y^3_{112}]D^6_{112} + [Y^3_{445} + Y^3_{156}]D^6_{156} \\ & + [Y^3_{478} + Y^3_{189}]D^6_{189} + [Y^3_{412} + Y^3_{123} + (\{(a_{23} - u_4)^2 + \\ & v_4^2\}/a_{23}^2)Y^3_{145} + (\{(a_{23} - u_7)^2 + v_7^2\}/a_{23}^2)Y^3_{178}]D^6_{123}. \end{aligned}$$

This equation is expressed in ten terms, the number predicted by Eq. (3.11.4). It is also expressed in terms of a linearly independent set of vectors. Hence, this is the equation which may properly be used to balance the mechanism.

The energy and torque curves for the unbalanced mechanism are shown in Figs. 4.2.2 and 4.2.3. Notice the changes in the kinetic energy of the device and the required rapid fluctuations in the torque curve. The first attempt to use the expected power of the balancing methods of Chapter Three was to specify ten values of kinetic energy which corresponded to the average of the curve in Fig. 4.2.2. This attempt resulted in the placement of all of the mass of the mechanism in the constant term associated with D^6_{112}, with all of the rest of the constant terms going to zero. For the reasons set forth in Section 3.8, it is impossible to force all of the constant coefficients to be zero. Therefore, this is an

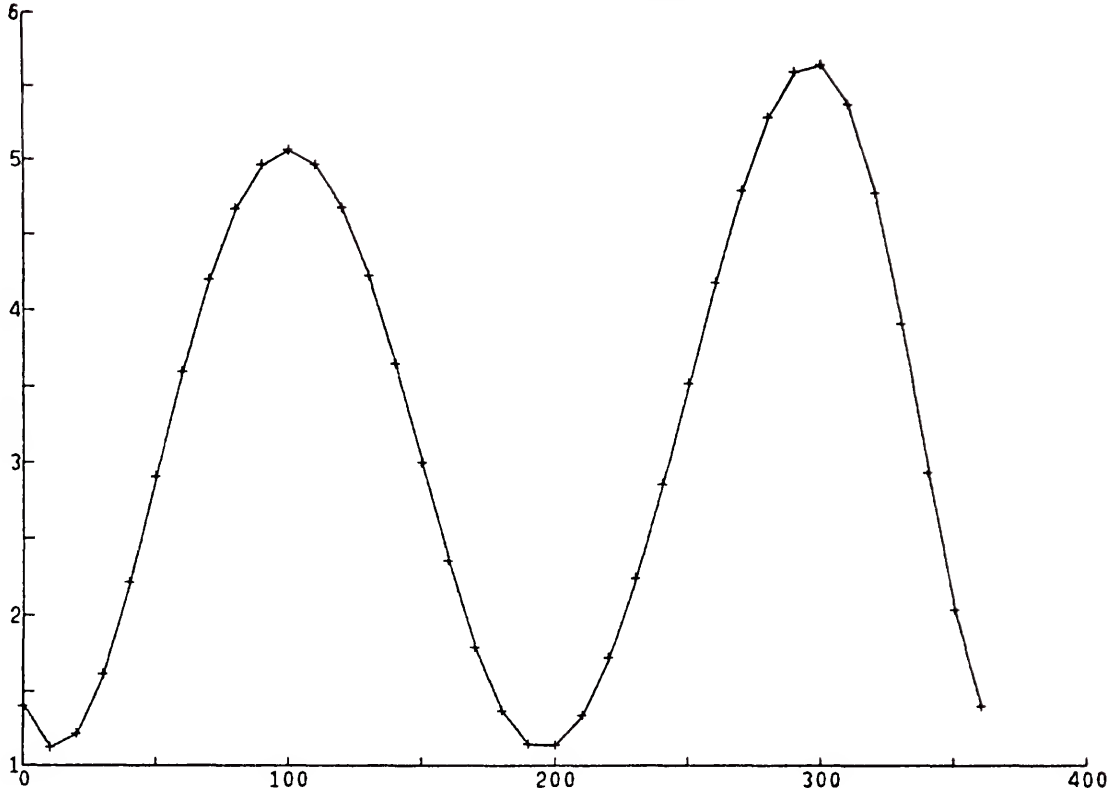

FIG. 4.2.2 Plot of Kinetic Energy of Eight-Bar

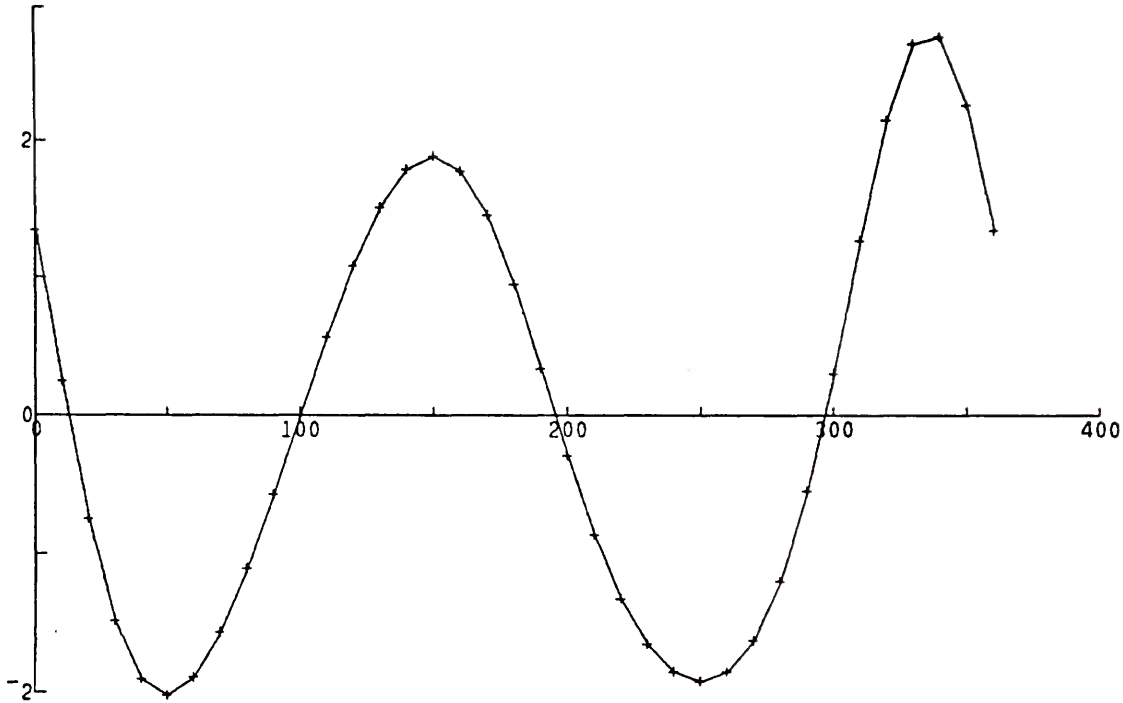

FIG. 4.2.3 Plot of Inertia Driving Torque of Eight-Bar

unacceptable mass distribution. Because of this unfortunate result, it was decided that perhaps the mechanism could be balanced if the term associated with D^6_{112} were ignored and specification made for the remaining nine terms. This was tried after removing the contribution for the energy contained in the input crank. The results called for links either too massive or too large physically to be physically realizable in the mechanism.

In light of the failure of the exact balancing methods to achieve a significant reduction in the fluctuations of the kinetic energy of the mechanism, an attempt was made to use the approximate blancing technique first suggested by Ogawa and Funabashi [19]. Briefly this method is:

1. Express the inertia driving torque of a four-bar as the geometric derivative of Eq. (3.8.1) to give

$$T^i = ([Y^3_{412} + Y^3_{123}]\dot{D}^6_{123} + Y^3_{223}\dot{D}^6_{223} + Y^3_{323}\dot{D}^6_{323} + [Y^3_{423} + Y^3_{134}]\dot{D}^6_{134}) \frac{1}{\omega_i} \tag{4.2.5}$$

   where ω_i is the input speed.

2. If the input is operating at constant speed, then $D^6_{123} = 0$, and it is always possible to make link 23 be an in-line link by making $v_{23} = 0$. This choice of v_{23} substituted into the definition of Y_{323} yields

$$Y^3_{323} = m_{23}v_{23}/a_{23} = 0.$$

   These simplifications yield an equation for the inertia driving torque of the mechanism as a sum of two terms, i.e.,

$$T^i = (Y^3_{223}D^6_{223} + [Y^3_{423} + Y^3_{134}]D^6_{134}) \frac{1}{\omega_i} .$$

3. Multiply this equation for ω_i/Y_{223} to find

$$T(\omega_i/Y_{223}) = D^6_{223} + ([Y^3_{423} + Y^3_{134}]/Y^3_{223})D_{134}.$$

The driving torque of the mechanism will be zero if the term on the left is zero.

4. Plot D_{134} vs. D_{223}, as is done in Fig. 4.2.4. Approximate this curve with a straight line. Set the constant multiplier of D_{134} equal to the negative of the slope of the approximating straight line. The constant is made up of the mass parameters of links 23 and 34.

5. Adjust the mass parameters of link 23 until this ratio is satisfied. Substitute these mass parameters into Eq. (4.2.5).

This procedure was used with great success for four-bars in Ref. [19]. However, in the eight-bar mechanism being considered, the required mass parameters to satisfy this method, when used on the link pairs 12-23, 45-56 and 78-89, caused a ten-fold increase in the kinetic energy of the mechanism and yielded an increased driving torque. It is hypothesized by the writer that this mechanism is of such a nature that it is impossible to balance by mass redistribution to significantly reduce the fluctuations of kinetic energy and their required torque. The possible explanation is that the input crank is quite small so that all of the system masses appear to be moving simultaneously with the same sinusoidal motion.

In light of the above negative results, attempts were made to balance the mechanism for specified values of kinetic energy which were not constant but which, if achieved, would reduce the inertia driving torque. It was found after several attempts that any departure from the "natural"

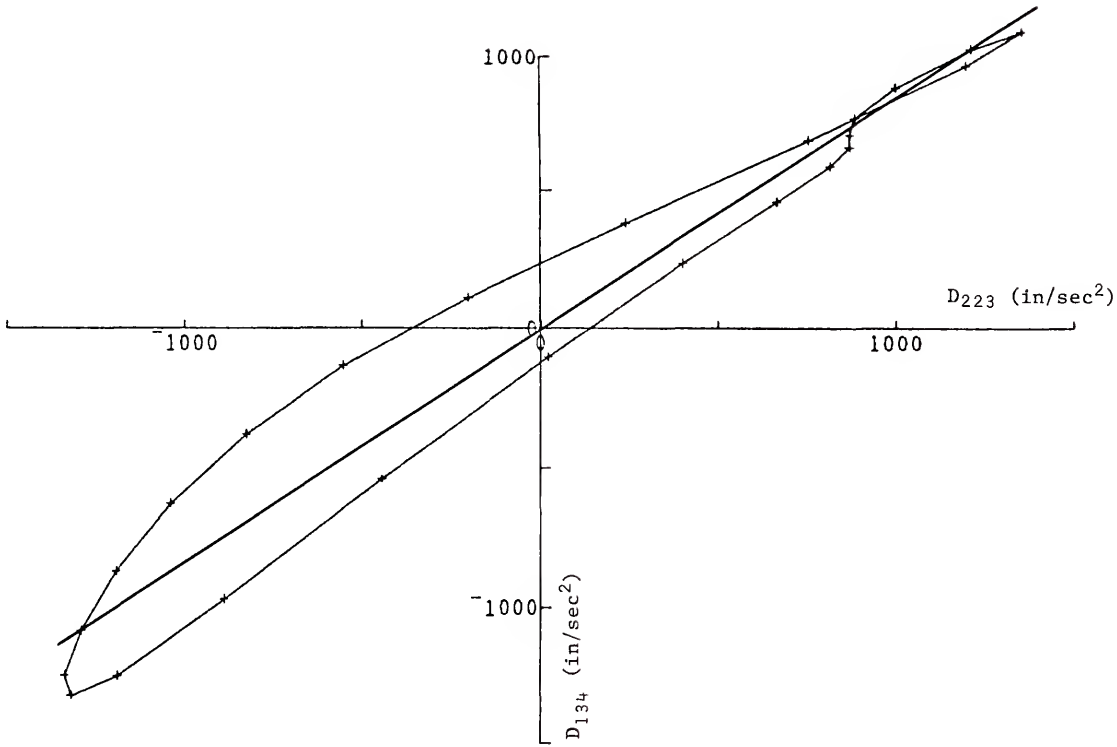

FIG. 4.2.4 Plot of D_{134} vs D_{223}

kinetic energy curve of the mechanism resulted in the requirement for mass parameters which were not physically realizable. This natural kinetic energy curve is the sum of the D^6_{1pq} or D^6_{4pq} remaining in the reduced equation for the kinetic energy of the mechanism. Hence, an indicator has been found for the shape of the kinetic energy curve and, by extrapolation, for the remaining properties of the mechanism for balancing. Also, it is possible to state that the minimum energy configuration for this mechanism will be found if all of the Y^3_{2pq} and Y^3_{3pq} are made to be zero and the constants multiplying the D_{1pq} are made as small as possible. The Y^3_{3pq} can be made to be zero by making the links of the mechanism in-line links, i.e., by choosing $v_{pq} = 0$. The Y^3_{2pq} can be satisfied by making the links in the form of physical pendula, i.e., links having the same radius of gyration if measured from either pin-joint.

4.3 A Cam Driven Five-Bar

A mechanism similar to that shown in Fig. 4.3.1 was proposed in U.S. Patent number 3,657,052 and was to be used in the formation of a looped pile carpet. The object of the mechanism shown was to move point 1 in a programmed fashion to fold a sheet of yarn into continuous loops. There would be an opposed pair of the mechanisms alternately folding the yarn to form a sandwich of yarns between two backing substrates as shown in Fig. 4.3.1. Such a mechanism, if it could be balanced, would be more attractive to operate as a component of a machine. The dimensions of the links and the mass parameters of the mechanism are shown in Table 4.3.1.*

*Since the actual motion of the endpoint, point 1, is not shown in the patent drawings, the author used, as an approximation of this surve, a coupler curve which was taken from a four-bar linkage.

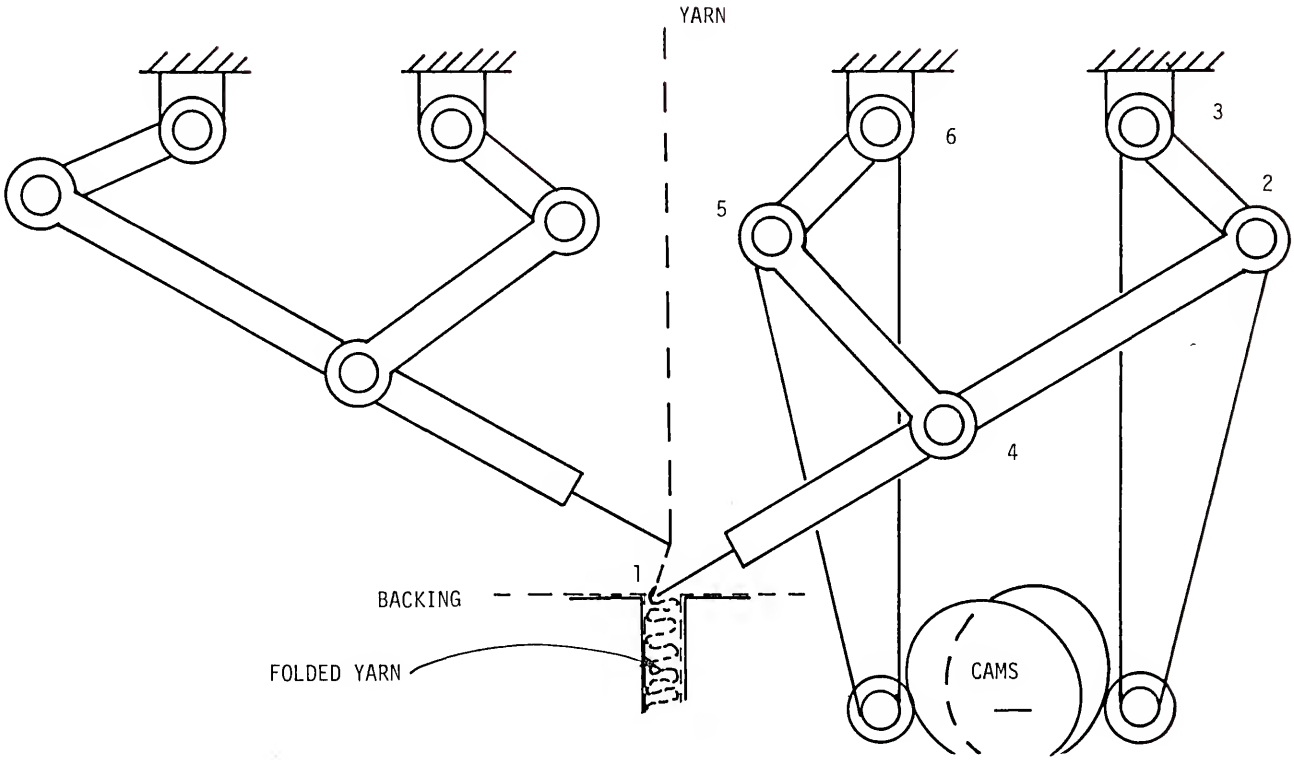

FIG. 4.3.1 A Cam Driven Five-Bar

TABLE 4.3.1
Mass Parameters and Link Dimensions
of the Original Mechanism

LINK	LOCATION CENTER OF GRAVITY		MASS	CENTROIDAL MOMENT OF INERTIA	LINK LENGTH
pq	u_{pq}	v_{pq}	m_{pq}	$m_{pq}k^2_{pq}$	a_{pq}
65	3.12	0	0.0025	0.0095	6.24
45	5.13	0	0.0037	0.0330	10.23
42	3	0	0.0092	0.4776	14.52
32	3.36	0	0.0027	0.0118	6.72

For the mechanism under consideration, it is desirable first to conceptualize the possible modes of balancing for this mechanism; there are five links ($n = 5$), five pin-joints ($j = 5$), and two fixed pivots ($f = 2$). Using Eq. (3.11.2), the number of positions possible for balancing for shaking moment is found to be

$$S_1 = Q - j = 4(n - 1) - j = 16 - 5 = 11.$$

Using Eq. (3.11.3) for shaking force, similar calculations yield

$$S_2 = Q - 2j = 16 - 2(5) = 6.$$

Using Eq. (3.11.4), the number of positions for kinetic energy is found as

$$S_3 = Q - j - 2f = 16 - 5 - 2(2) = 7.$$

The significance of the above results is that these are the number of balancing conditions which must be satisfied to completely balance the mechanism for the designated dynamic properties. They are also the maximum number of non-zero specifications which may be made in the properties and still be satisfied exactly. To analytically determine what the balancing conditions are, it is necessary to derive the equations for the various properties.

It was shown in Section 3.4 that the equation for the dynamic properties of a mechanism can be written using Eq. (3.4.2). The general equation for the dynamic properties of the mechanism of interest is

$$
\begin{aligned}
S = {} & Y_{165}D_{165} + Y_{265}D_{265} + Y_{365}D_{365} + Y_{465}D_{465} && \text{(link 65)} \\
& + Y_{145}D_{145} + Y_{245}D_{245} + Y_{345}D_{345} + Y_{445}D_{445} && \text{(link 45)} \\
& + Y_{142}D_{142} + Y_{242}D_{242} + Y_{342}D_{342} + Y_{442}D_{442} && \text{(link 42)} \\
& + Y_{132}D_{132} + Y_{232}D_{232} + Y_{332}D_{332} + Y_{432}D_{432}. && \text{(link 32)}
\end{aligned}
$$

However, because of the fixed pivots 6 and 3, the terms $D^7_{115} = D_{132} = 0$ for all dynamic properties (see Appendix A). For each of the moving pin-joints, 5, 4 and 2, $D_{1pq} = D_{1pq}$; $D_{4pq} = D_{4qr}$ (see Appendix B). Hence, the above equation may be reduced in complexity by making these substitutions and collecting in terms of the constant coefficients of identical variable factors. The resulting equation is

$$
\begin{aligned}
S = {} & Y_{265}D_{265} + Y_{365}D_{365} \\
& + Y_{245}D_{245} + Y_{345}D_{345} + [Y_{465} + Y_{445}]D_{465} \\
& + Y_{242}D_{242} + Y_{342}D_{342} + [Y_{145} + Y_{142}]D_{145} \\
& + Y_{232}D_{232} + Y_{332}D_{332} + [Y_{442} + Y_{432}]D_{432}.
\end{aligned}
\tag{4.3.1}
$$

If the substitutions

$$Y_{ipq} \Rightarrow Y^3_{ipq}; \; D_{ipq} \Rightarrow D^4_{ipq}$$

from Eq. (2.5.3) are made in the above equation, it becomes the equation for the total angular momentum of the mechanism. The time derivative of this resulting equation is the shaking moment of the mechanism. There are eleven terms in this equation which was predicted using Eq. (3.11.2).

Using the substitutions

$$Y_{ipq} \Rightarrow Y^3_{ipq} \text{ and } D_{ipq} \Rightarrow D^6_{ipq}$$

from Eq. (2.6.3) in Eq. (4.3.1), the resulting equation is the equation for the kinetic energy of the five-bar. Since, the cranks must rotate about fixed pivots (see Appendix A), then it is evident from the definitions of Eq. (2.6.3) that

$$D^6_{265} = D^6_{365} = D^6_{232} = D^6_{332} = 0.$$

This reduces Eq. (4.3.1) to the equation for the kinetic energy of the five-bar

$$\begin{aligned} E^i = {} & Y^3_{245}D^6_{245} + Y_{345}D^6_{345} + [Y^3_{365} + Y^3_{445}]D^6_{465} + Y^3_{242}D^6_{242} \\ & + Y_{342}D_{342} + [Y^3_{145} + Y^3_{142}]D_{145} + [Y^3_{442} + Y^3_{432}]D^6_{432} \end{aligned} \tag{4.3.2}$$

which is seen to contain seven terms, the number predicted by Eq. (3.11.4).

As a last development, use the definitions from Eq. (2.3.3) in the form

$$Y_{ipq} \Rightarrow Y^2_{ipq} \text{ and } D_{ipq} \Rightarrow D^2_{ipq}$$

and substitute these results into Eq. (4.3.1) to provide the equation for the total linear momentum of the five-bar. Again, if the appropriate substitutions from Eq. (2.3.3) and the special nature of the motion of the cranks of the mechanism are accounted for (see Appendix A), then

$$D^2_{265} = D^2_{232} = 0$$

and accounting for the common moving pin-joints (see Appendix B), the equalities

$D^2_{465} = D^2_{445}$; $D^2_{442} = D^2_{432}$; $D^2_{145} = D^2_{145}$;

$D^2_{365} = D^2_{345}$; $D^2_{245} = D_{242}$; $D^2_{342} = D^2_{332}$

follow. Finally the equation reduces to

$$\begin{aligned} L = {} & [Y^2_{365} + Y^2_{345}]D^2_{345} + [Y^2_{465} + Y^2_{445}]D^2_{445} \\ & + [Y^2_{265} + Y^2_{242}]D^2_{245} + [Y^2_{145} + Y^2_{142}]D^2_{145} \\ & + [Y^2_{342} + Y^2_{332}]D^2_{342} + [Y^2_{442} + Y^2_{432}]D^2_{442} \end{aligned} \tag{4.3.3}$$

which clearly involves six constant terms which multiply six variable terms. There are six balancing conditions that may be specified for this equation as predicted by Eq. (3.11.3).

The definition of complete balancing as used in this work means that some dynamic property is identically zero for the complete cycle of the mechanism. Complete balancing will be illustrated in this case by considering the above three equations in reverse order. For Eq. (4.3.3), the shaking force of the mechanism may be forced to be zero by requiring that the six constant terms of the equation be identically zero. The definitions of these terms yield

$$0 = Y^2_{365} + Y^2_{345} = - m_{65}v_{65}/a_{65} - m_{45}v_{45}/a_{45}, \tag{4.3.4}$$

$$0 = Y^2_{465} + Y^2_{445} = m_{65}u_{65}/a_{65} + m_{45}u_{45}/a_{45}, \tag{4.3.5}$$

$$0 = Y^2_{265} + Y^2_{242} = m_{65}v_{65}/a_{65} + m_{42}v_{42}/a_{42}, \tag{4.3.6}$$

$$0 = Y^2_{145} + Y^2_{142} = m_{45}(1 - u_{45}/a_{45}) + m_{42}(1 - u_{42}/a_{42}), \tag{4.3.7}$$

$$0 = Y^2_{342} + Y^2_{332} = - m_{65}v_{65}/a_{65} - m_{32}v_{32}/a_{32}, \text{ and} \tag{4.3.8}$$

$$0 = Y^2_{442} + Y^2_{432} = m_{42}u_{42}/a_{42} + m_{32}u_{32}/a_{32}. \tag{4.3.9}$$

These six equations are expressed in terms of twelve of the sixteen mass parameters of the linkage. This means that six of the mass parameters in the equations are free choices and that the values of the four radii of

gyration of the links have no influence on the shaking force of the mechanism. These six equations are the complete balancing conditions for the five-bar; they are relatively easily satisfied.

For this mechanism, link 42 is geometrically the largest link; it is also the link which is preforming the useful work of the mechanism. For these reasons, it is assumed that the configuration of link 42 is fixed. This means that the mass parameters of this link will be taken as three of the free choices; i.e., m_{42}, u_{42}, and v_{42} are given. There are three remaining arbitrary choices. The author made the decision to pick the mass content (m_{32}, m_{45}, and m_{65}) of the three other moving links. This was done and a computer program written (see Appendix E) which calculated the remaining mass parameters based on the algebraic solution of Eqs. (4.3.6) through (4.3.9). It was found that the original choices of the values for the masses of certain of the links were too small and these were adjusted through several iterations to give both convenient location of the centers of mass and positive values for the radii of gyration of the links. A final, but by no means optimum, set of mass parameters for the completely force balanced mechanism is shown in Table 4.3.2. The placement of the counterweights was next calculated and these values are shown in Table 4.3.3. Note that there are calculated values for the required radii of gyration of the counterweights shown (see Eqs. (3.12.1) through (3.12.4)).

After the selection of the balanced links and the locations of the counterweights, an analysis program based on the dyad approach of Pollock [21] was run to determine the effects of balancing on the mechanism. Figures 4.3.2 through 4.3.6 illustrate some dynamic properties of interest in the unbalanced mechanism for comparison. Figures 4.3.7 through 4.3.10

TABLE 4.3.2 Mass Parameters of Completely Shaking Force Balanced Mechanism

LINK	LOCATION OF CENTER OF GRAVITY		MASS	CENTROIDAL MOMENT OF INERTIA
pq	u_{pq}	v_{pq}	m_{pq}	$m_{pq}k^2_{pq}$
65	-8. 665	0	0.0295	0.6568
45	12.435	0	0.0337	0.4045
42	3.000	0	0.0092	0.4776
32	-0.799	0	0.0159	0.0784

TABLE 4.3.3 Mass Parameters of Counterweights for Completely Shaking Force Balanced Mechanism

LINK	LOCATION OF CENTER OF GRAVITY		MASS	CENTROIDAL MOMENT OF INERTIA
pq	u_{pq}	v_{pq}	m_{pq}	$m_{pq}k^2_{pq}$
65	-9.737	0	0.0270	0.2745
45	13.349	0	0.0300	0.1466
42	0	0	0	0
32	-1.632	0	0.1325	0.1155

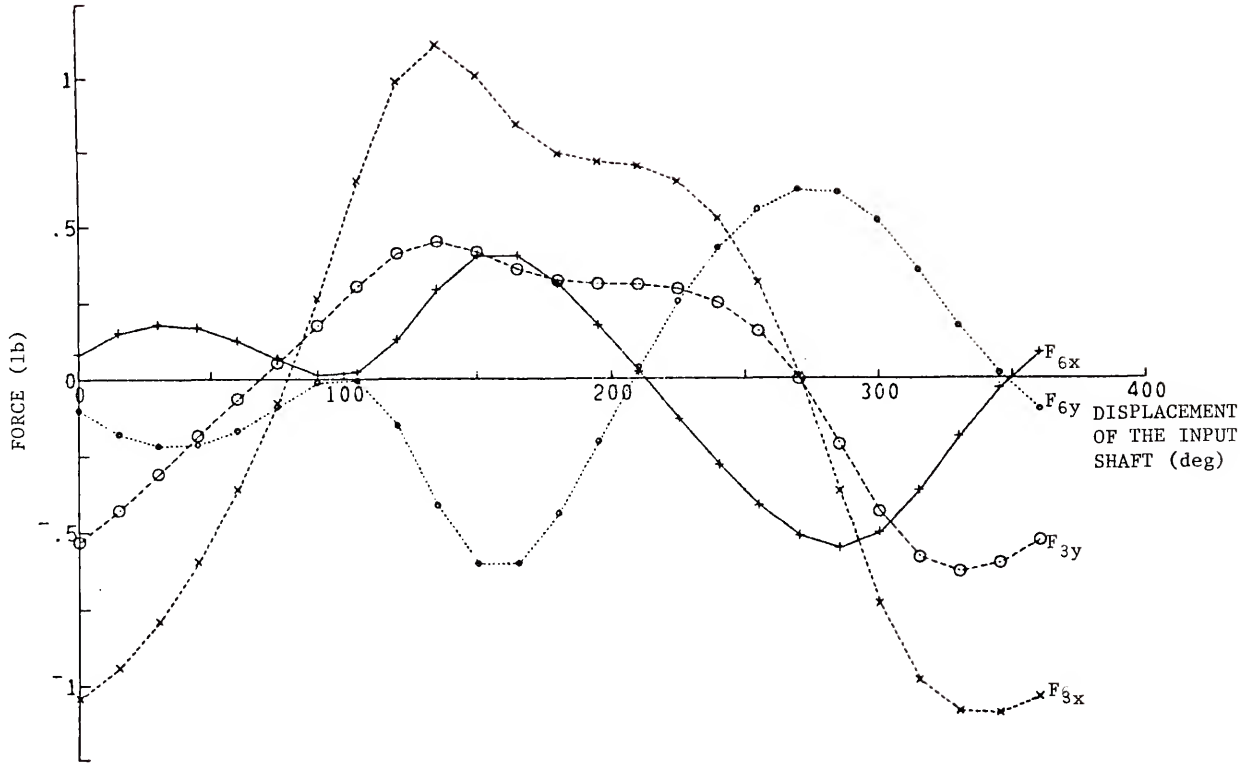

FIG. 4.3.2 Forces of Cranks of Unblanced Five-Bar

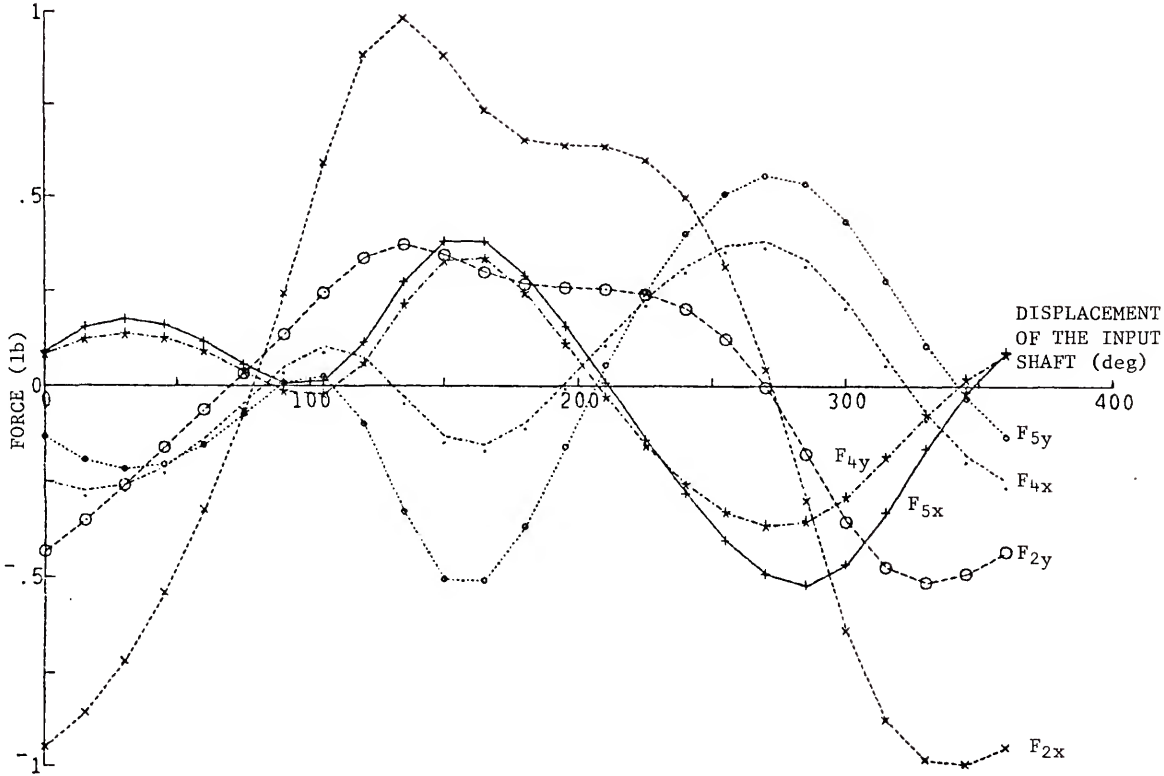

FIG. 4.3.3 Forces in Moving Pin-Joints of Unbalanced Five-Bar

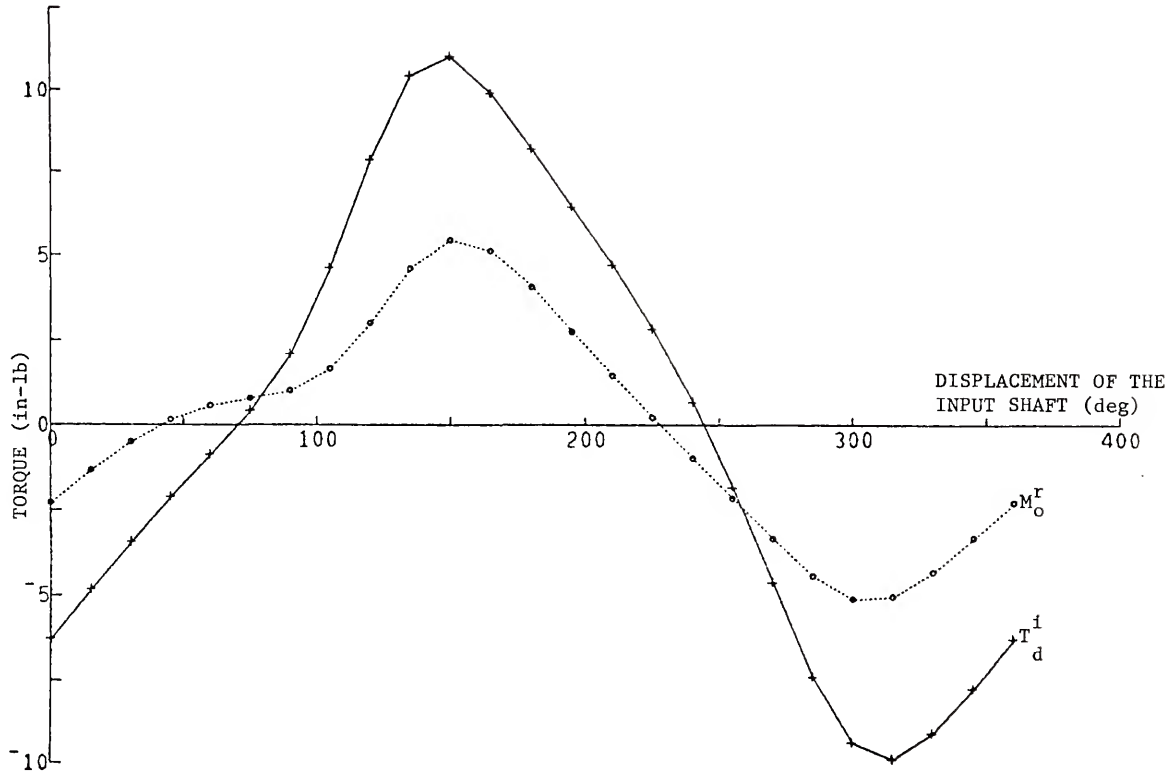

FIG. 4.3.4 Inertia Driving Torque and Rocking Moment of Unbalanced Five-Bar

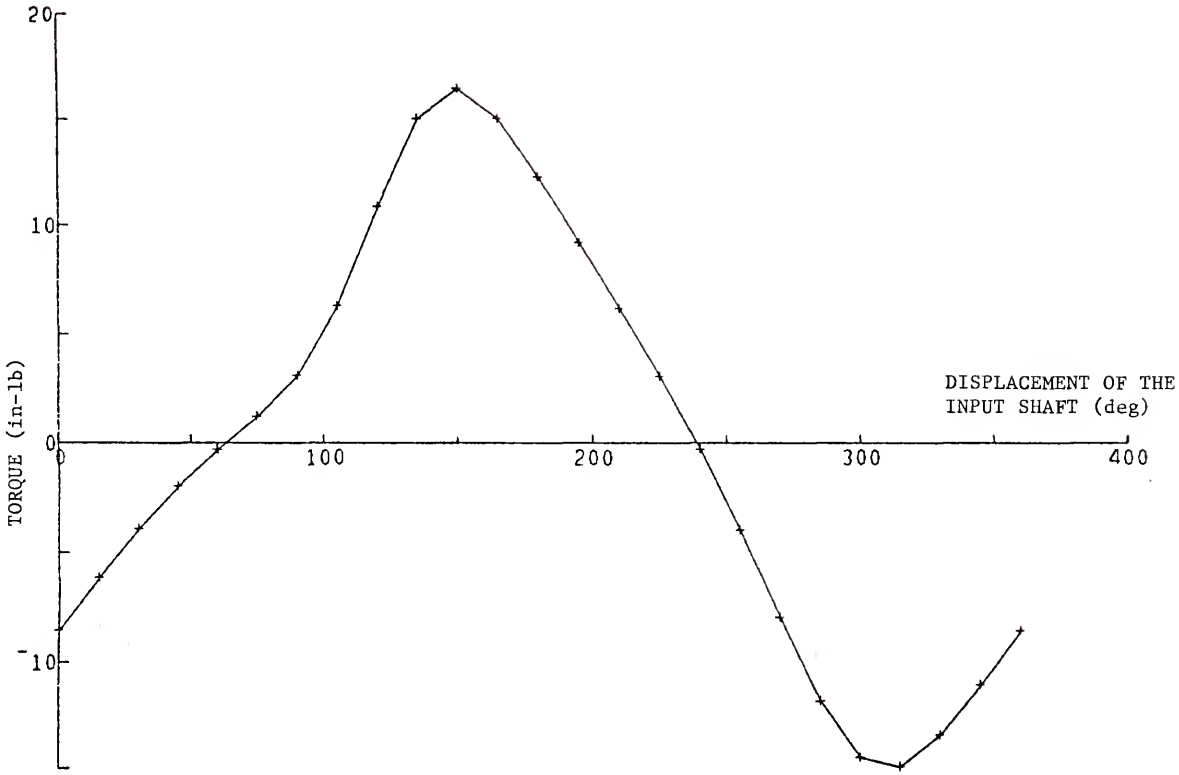

FIG. 4.3.5 Shaking Moment of Unbalanced Five-Bar

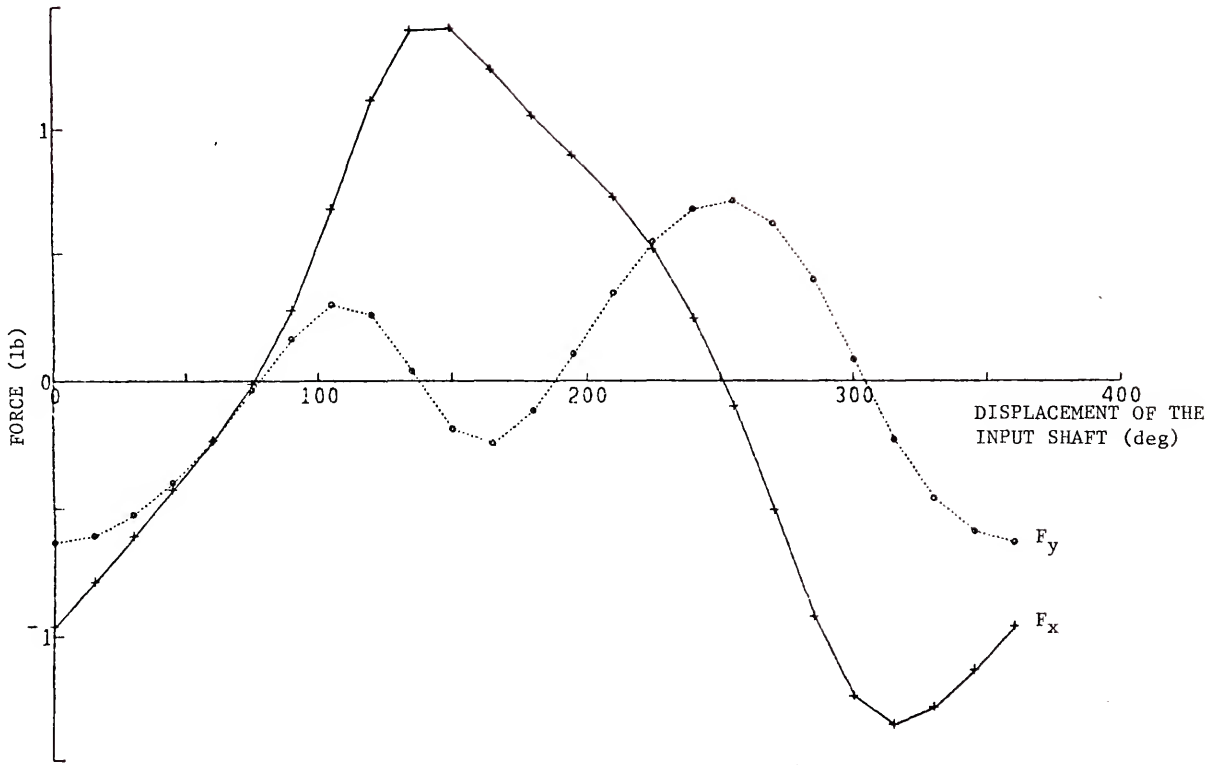

FIG. 4.3.6 Shaking Force of Unbalanced Five-Bar

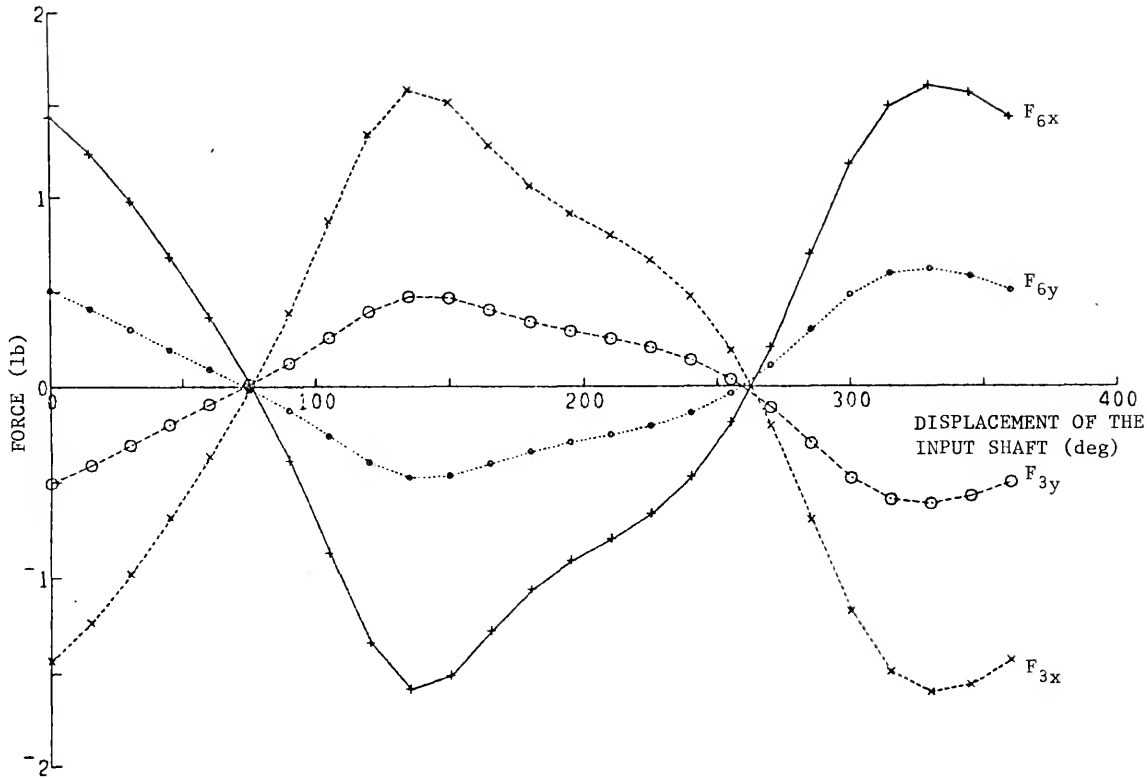

FIG. 4.3.7 Crank Reactions of Force Balanced Five-Bar

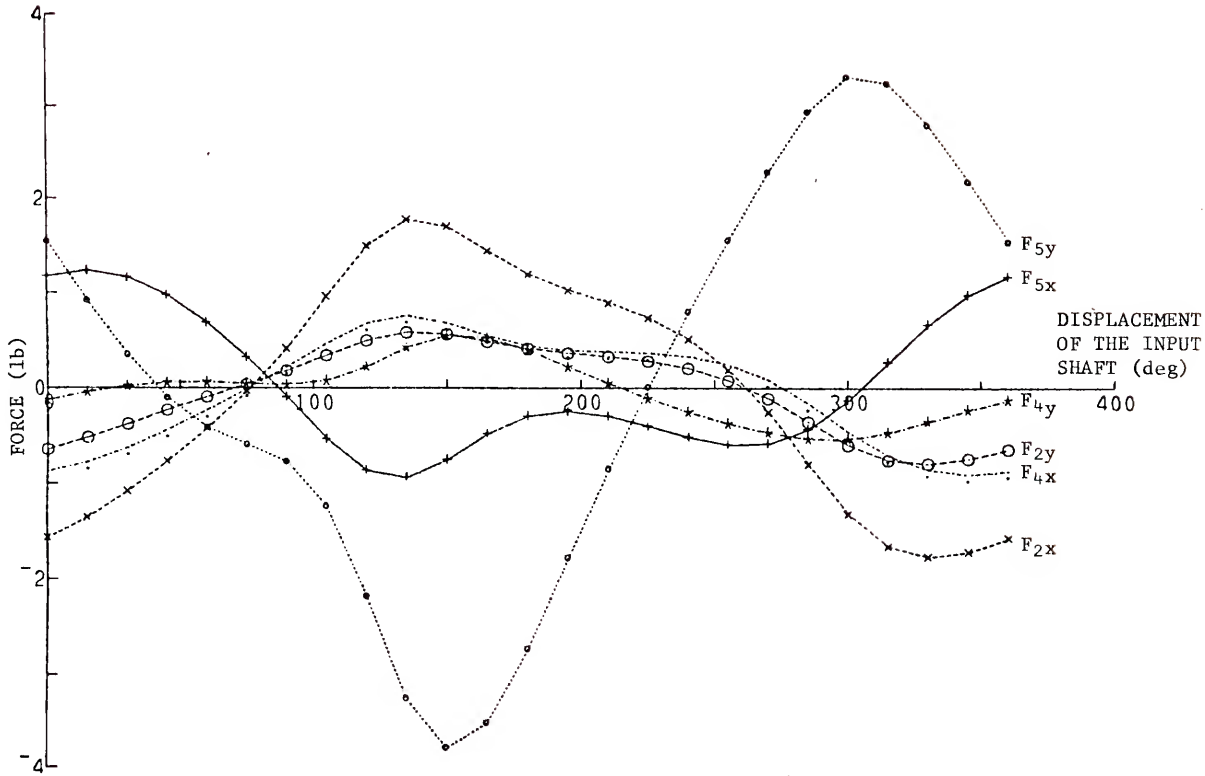

FIG. 4.3.8 Forces in Moving Pin-Joints of Force Balanced Five-Bar

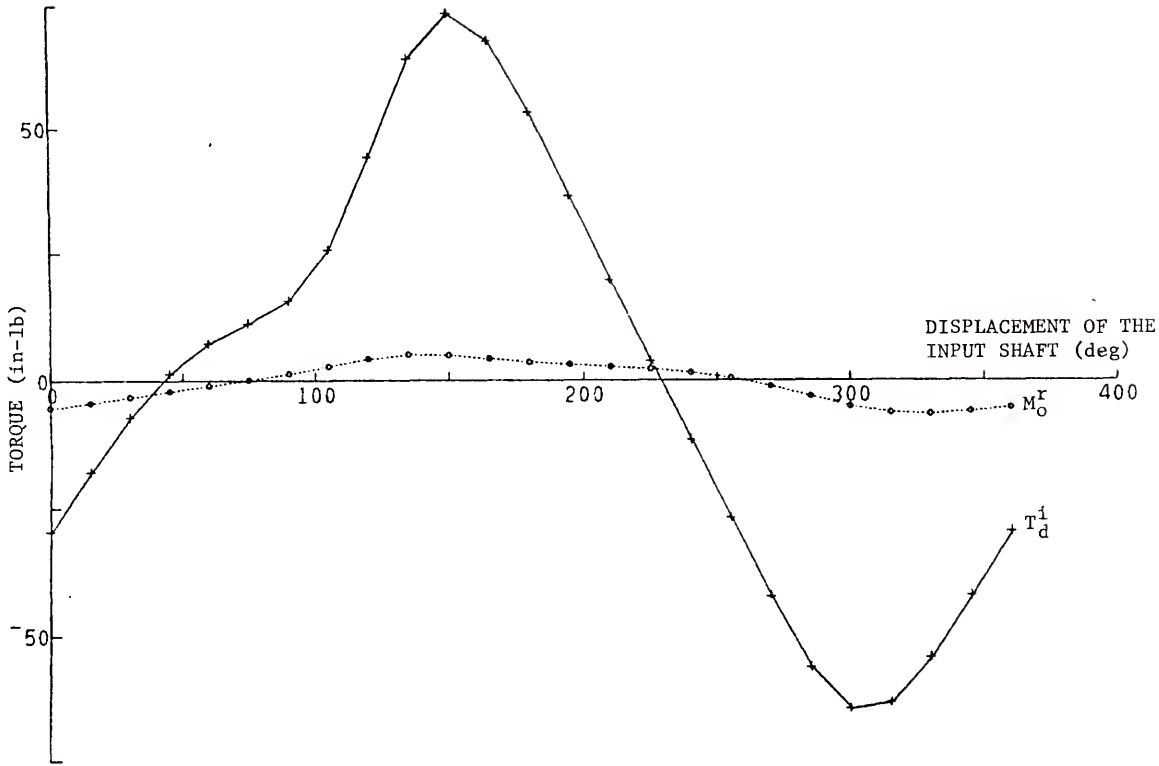

FIG. 4.3.9 Inertia Driving Torque and Rocking Moment of Force Balanced Five-Bar

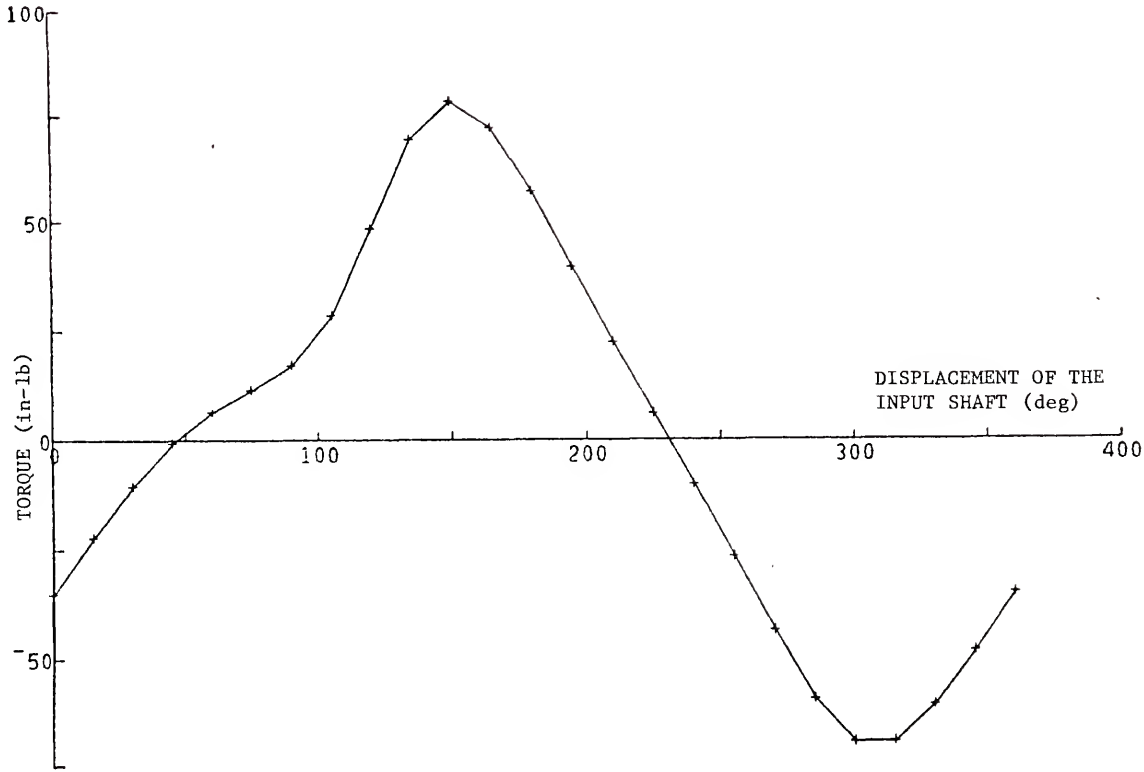

FIG. 4.3.10 Shaking Moment of Force Balanced Five-Bar

show these same properties for the balanced mechanism except for the shaking force which has been forced to zero. A comparison of Figs. 4.3.2 and 4.3.7 shows that the force exerted by the ground on the mechanism has been increased only by about 50 percent. Similarly, the forces at the pin-joints of the "floating" links can be compared in Figs. 4.3.3 and 4.3.8 to find that the forces throughout the dyad have been increased by a factor of two to four. This is probably acceptable given the low values of these forces originally. If, however, Figs. 4.3.4 and 4.3.9 are examined, it is found that the driving torque of the mechanism has been increased by a factor of ten from a peak value of approximately ten inch-pounds to a peak of about 100 inch-pounds. Again, this value may be acceptable given other considerations of the design. It can probably be improved upon with a diligent search to better size the counterweights. An improvement in this property will undoubtedly improve the shaking moment of the mechanism which is shown in the next two figures. This points up the need for further development in the balancing of mechanisms to enhance the technique which is presented here through directed optimization schemes.

It was pointed out in Section 3.8 that it is impossible to completely balance any mechanism for inertia driving torque, or any of the properties derived directly from the equation for the kinetic energy of a mechanism. This difficulty was associated with the need for a subsystem which generated negative kinetic energy. Unfortunately, such a subsystem is physically unrealizable. Therefore, complete kinetic energy balancing criteria in terms of Eq. (4.3.4) will not be considered for the above mechanism.

The remaining criterion is that of balancing for zero momentum or, as is more popular in the mechanisms research community, shaking moment.

This requires that the constant coefficients of Eq. (4.3.1) be set to zero as follows:

$$0 = Y^3_{265} = m_{65}u_{65}/a_{65} - m_{65}(u^2_{65} + v^2_{65} + k^2_{65})/a^2_{65} \tag{4.3.10}$$

$$0 = Y^3_{245} = m_{45}u_{45}/a_{45} - m_{45}(u^2_{45} + v^2_{45} + k^2_{45})/a^2_{45} \tag{4.3.11}$$

$$0 = Y^3_{242} = m_{42}u_{42}/a_{42} - m_{42}(u^2_{42} + v^2_{42} + k^2_{42})/a^2_{42} \tag{4.3.12}$$

$$0 = Y^3_{232} = m_{32}u_{32}/a_{32} - m_{32}(u^2_{32} + v^2_{32} + k^2_{32})/a^2_{32} \tag{4.3.13}$$

$$0 = Y^3_{365} = m_{65}v_{65}/a_{65} \tag{4.3.14}$$

$$0 = Y^3_{345} = m_{45}v_{45}/a_{45} \tag{4.3.15}$$

$$0 = Y^3_{342} = m_{42}v_{42}/a_{42} \tag{4.3.16}$$

$$0 = Y^3_{332} = m_{32}v_{32}/a_{32} \tag{4.3.17}$$

$$\begin{aligned} 0 = Y^3_{465} + Y^3_{445} &= m_{65}(u^2_{65} + v^2_{65} + k^2_{65})/a^2_{65} \\ &\quad + m_{45}(u^2_{45} + v^2_{45} + k^2_{45})/a^2_{45} \end{aligned} \tag{4.3.18}$$

$$\begin{aligned} 0 = Y^3_{145} + Y^3_{142} &= m((a_{45} - u_{45})^2 + v^2_{45} + k^2_{45})/a^2_{45} \\ &\quad + m_{42}((a_{42} - u_{42})^2 + v^2_{42} + k^2_{42})/a^2_{42} \end{aligned} \tag{4.3.19}$$

$$\begin{aligned} 0 = Y^3_{442} + Y^3_{432} &= m_{42}(u^2_{42} + v^2_{42} + k^2_{42})/a^2_{42} \\ &\quad + m_{32}(u^2_{32} + v^2_{32} + k^2_{32})/a^2_{32} \end{aligned} \tag{4.3.20}$$

To satisfy Eqs. (4.3.14) through (4.3.17), it is most convenient to place the center of mass of the link on the line connecting the pin-joints of the link. The first four of the equations for balancing then become the requirements that the links of the mechanism be physical pendula, i.e., have the same total moment of inertia about either end. Note, however, that the last three of the balancing equations must also equal zero. Each of these is composed of the sum of a set of positive terms. Hence, it is impossible to satisfy these terms without adding some negative inertia subsystems.

The first of these, Eq. (4.3.18), and the last, Eq. (4.3.20), can be made negative if a negative inertia subsystem, such as is used in Refs. [1], [3], [6] and [10], is placed on ground at pivots 3 and 6. However, Eq. (4.3.19) requires a moving negative inertia that operates around one of the moving pin-joints. In this example, the negative inertia is placed at pin-joint 2. The negative inertia will move with link 32 and will experience angular motion which is the difference between that of link 32 and link 42. The special form of the description of the total angular momentum of such a balancing gear is given in Appendix C.

When the descriptions of the negative inertia gears are substituted into Eq. (4.3.1) to conform to the new configuration of the mechanism as shown in Fig. 4.3.5, the equation for the total angular momentum of the mechanism becomes

$$
\begin{aligned}
H = {} & Y^3_{365}D^4_{365} + Y^3_{345}D^4_{345} + Y^3_{342}D^4_{342} + [Y^3_{332} + Y^1_{19c}v_9/a_{32}]D^4_{332} \\
& + [Y^3_{265} + Y^1_{47a}n_{7a}/a^2_{65}]D^4_{265} + Y^3_{245}D^4_{245} \\
& + [Y^3_{242} + Y^1_{49c}n_{9c}/a^2_{42}]D^4_{242} + [Y^3_{232} + Y^1_{48b}n_{8b}/a^2_{32} \\
& + Y^1_{19c}(a_{32}u_9 - (u^2_9 + v^2_9))/a^2_{32} - Y^1_{49c}n_{9c}/a^2_{32}]D^4_{232} \\
& + [Y^3_{465} + Y^3_{445} - Y^1_{47a}n_{7a}/a^2_{65}]D^4_{465} \\
& + [Y^3_{145} + Y^3_{142} - Y^1_{49c}n_{9c}/a^2_{42}]D^4_{145} \\
& + [Y^3_{442} + Y^3_{432} - Y^1_{48b}n_{8b}/a^2_{32} + Y_{19c}(u^2_9 + v^2_9)/a^2_{32} \\
& + Y^1_{49c}n_{9c}(a^2_{24} - a^2_{32})/a^2_{24}a^2_{24}]D^4_{432}.
\end{aligned}
\tag{4.3.21}
$$

Note that this equation is still expressed in eleven terms, each the product of a constant and a time-dependent term.* This conforms to the

*The Y^1_{ipq} constant coefficients represent the mass parameters of the negative inertia subsystems.

number of balancing conditions predicted by Eq. (3.11.2). However, there would have been more terms for balancing if any of the gears had its center of mass not coincident with its center of rotation.

The conditions for complete balancing of the five-bar with the added negative inertia terms become

$$\begin{aligned} 0 &= Y^3_{265} + Y^1_{47a} n_{7a}/a^2_{65} \\ &= m_{65}(a_{65}u_{65} - (u^2_{65} + v^2_{65} + k^2_{65}))/a^2_{65} + n_{7a}m_{7a}k^2_{7a}/a^2_{65}, \end{aligned} \tag{4.3.21}$$

$$0 = Y_{245} = m_{45}(a_{45}u_{45} - (u^2_{45} + v^2_{45} + k^2_{45}))/a^2_{45}, \tag{4.3.22}$$

$$\begin{aligned} 0 &= Y^3_{242} + Y^1_{49c} n_{9c}/a^2_{42} \\ &= m_{42}(a_{42}u_{42} - (u^2_{42} + v^2_{42} + k^2_{42}))/a^2_{42} + n_{9c}m_{9c}k^2_{9c}/a^2_{42}, \end{aligned} \tag{4.3.23}$$

$$\begin{aligned} 0 &= Y^3_{232} + Y^1_{48b} n_{8b}/a_{32} + Y^1_{19c}(a_{32}u_9 - (u^2_9 + v^2_9))/a^2_{32} \\ &\quad - Y^1_{49c} n_{9c}/a^2_{32} \\ &= m_{32}(a_{32}u_{32} - (u^2_{32} + v^2_{32} + k^2_{32}))/a_{32} + n_{8b}m_{8b}k^2_{8b}/a^2_{32} \\ &\quad + m_{9c}(a_{32}u_9 - (u^2_9 + v^2_9))/a^2_{32} - n_{9c}m_{9c}k^2/a^2_{32}, \end{aligned} \tag{4.3.24}$$

$$0 = Y^3_{365} = m_{65}v_{65}/a_{65}, \tag{4.3.25}$$

$$0 = Y^3_{345} = m_{45}v_{45}/a_{45}, \tag{4.3.26}$$

$$0 = Y^3_{342} = m_{42}v_{42}/a_{42}, \tag{4.3.27}$$

$$0 = Y^3_{332} + Y^1_{19c}v_9/a_{32} = m_{32}v_{32}/a_{32} + m_{9c}v_9/a_{32}, \tag{4.3.28}$$

$$\begin{aligned} 0 &= Y^3_{465} + Y^3_{445} - Y^1_{47a} n_{9c}/a^2_{65} \\ &= m_{65}(u^2_{65} + v^2_{65} + k^2_{65})/a^2_{65} + m_{45}(u^2_{45} + v^2_{45} + k^2_{45})/a^2_{45} \\ &\quad - n_{7a}m_{7a}k^2_{7a}/a^2_{65}, \end{aligned} \tag{4.3.29}$$

$$\begin{aligned} 0 &= Y^3_{145} + Y^3_{145} - Y^1_{49c} n_{9c}/a^2_{42} \\ &= m_{45}((a_{45} - u_{45})^2 + v^2_{45} + k^2_{45})/a^2_{45} \\ &\quad + m_{42}((a_{42} - u_{42})^2 + v_{42} + k^2_{42})/a^2_{42} - n_{9c}m_{9c}k^2_{9c}/a^2_{42}, \end{aligned} \tag{4.3.30}$$

$$\begin{aligned} 0 &= Y^3_{442} + Y^3_{432} - Y^1_{48b} n_{8b}/a^2_{32} + Y^1_{19c}(u^2_9 + v^2_9)/a^2_{32} \\ &\quad + Y^1_{49}\, n_9\, (a^2_{24} - a^2_{32})/a^2_{24}a^2_{32} \\ &= m_{42}(u^2_{42} + v^2_{42} + k^2_{42})/a^2_{42} + m_{32}(u^2_{32} + v^2_{32} + k^2_{32})/a^2_{32} \\ &\quad - n_{8b}m_{8b}k^2_{8b}/a^2_{32} + m_{9c}(u^2_9 + v^2_9)/a^2_{32} + n_{9c}m_{9c}k^2_{9c}(a^2_{24} - a^2_{32})/a^2_{24}a^2_{32}. \end{aligned} \tag{4.3.31}$$

These eleven equations can be solved for the required mass parameters and achieve complete balancing in terms of real physical mass content. The eleven equations are expressed in terms of twenty-two unknowns. This means that there are eleven arbitrary choices which may be made in the solution of the problem. These eleven parameters may be varied in order to achieve a "good" balance of the mechanism. Note that the masses of the grounded gears (m_{6a}, m_{7b}) will have no direct effect on the balancing of the mechanism so that there are, in reality, only nine free choices. The author chose to specify the seven masses of the four links (m_{65}, m_{32}, m_{42}, m_{32}), the three balancing gears (m_{7a}, m_{8b}, m_{9c}), the centroidal moments of inertia of gear 7a and links 42 and 32 ($m_{7a}k_{7a}^2$, $m_{42}k_{42}^2$, $m_{32}k_{32}^2$), and the u-coordinate of the location of the center of mass of link 45 (u_{45}). A computer program was written which solved for the remaining mass parameters. It required several iterations, changing one or more of the mass parameters each time, to achieve an acceptable set of mass parameters for the system. These mass and counterweight parameters are listed in Tables 4.3.4 and 4.3.5, respectively. The analysis program was again used to determine changes in the dynamic properties of the mechanism. The set of graphs, Figs. 4.3.11 through 4.3.14, was then plotted. A comparison can now be made between those figures and the comparable set for the unbalanced linkage. In pin-joints 5 and 4 (Figs. 4.3.12 and 4.3.3), it is apparent that the forces have been driven up by a factor of four. In pin-joint 2, however, the forces have been driven up by a factor of 80. These increases would require larger bearings at each of the pin-joints. In Section 3.7, it was pointed out that complete shaking moment balancing would also accomplish complete shaking force balancing. Note that perfect balance has been achieved in both shaking force and

TABLE 4.3.4 Mass Parameters of Completely Shaking Moment Balanced Mechanism

LINK	LOCATION OF CENTER OF GRAVITY		MASS	CENTROIDAL MOMENT OF INERTIA
pq	u_{pq}	v_{pq}	m_{pq}	$m_{pq}k^2_{pq}$
65	-4.880	0	0.005	0.4787
45	4.000	0	0.010	0.2492
42	16.288	0	0.050	2.8000
32	-5.6	0	0.080	0.7500

TABLE 4.3.4 Mass Parameters of Counterweights and Negative Inertias for Completely Shaking Moment Balanced Mechanism

LINK	LOCATION OF CENTER OF GRAVITY		MASS	CENTROIDAL MOMENT OF INERTIA
pq	u_{pq}	v_{pq}	m_{pq}	$m_{pq}k^2_{pq}$
65	-12.633	0	0.0025	0.1591
45	3.323	0	0.0063	0.2085
45	19.267	0	0.0408	0.3434
32	-5.904	0	0.0773	0.1682
7a	0	0	0.0150	0.7500
8b	0	0	0.0150	10.0131
9c	0	0	0.015	4.2403

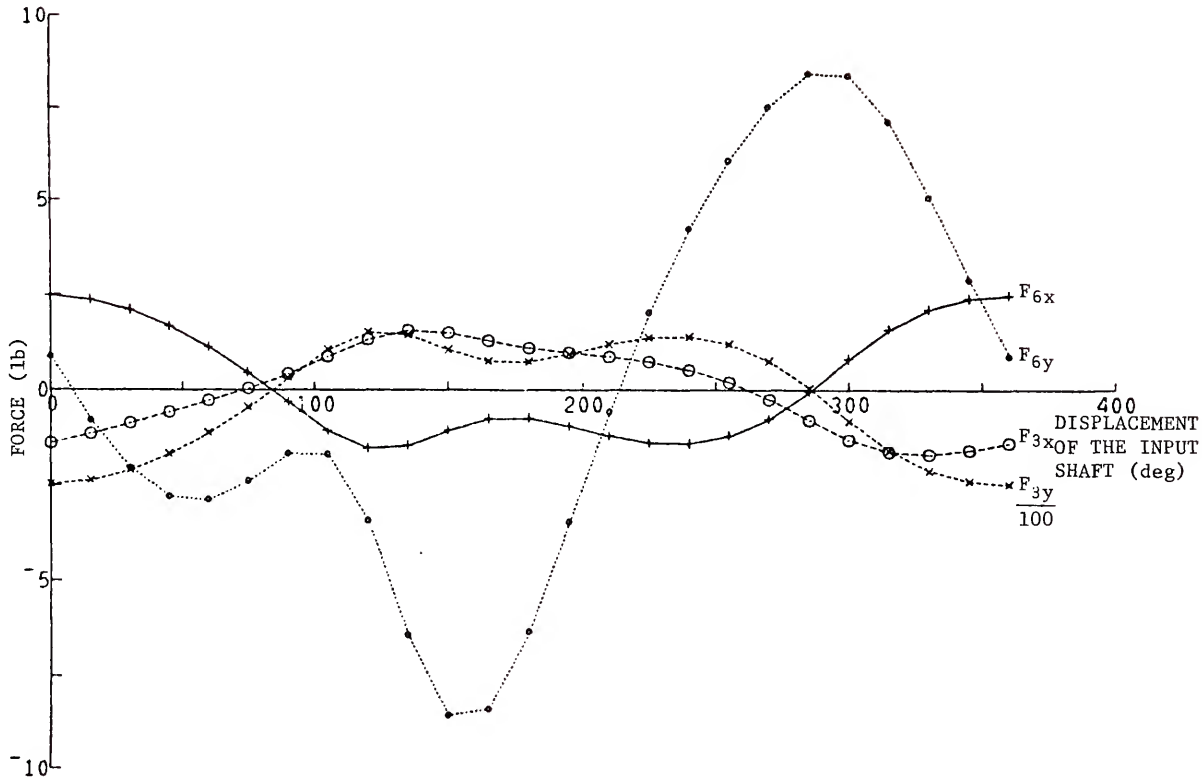

FIG. 4.3.11 Forces on Cranks of Moment Balanced Five-Bar

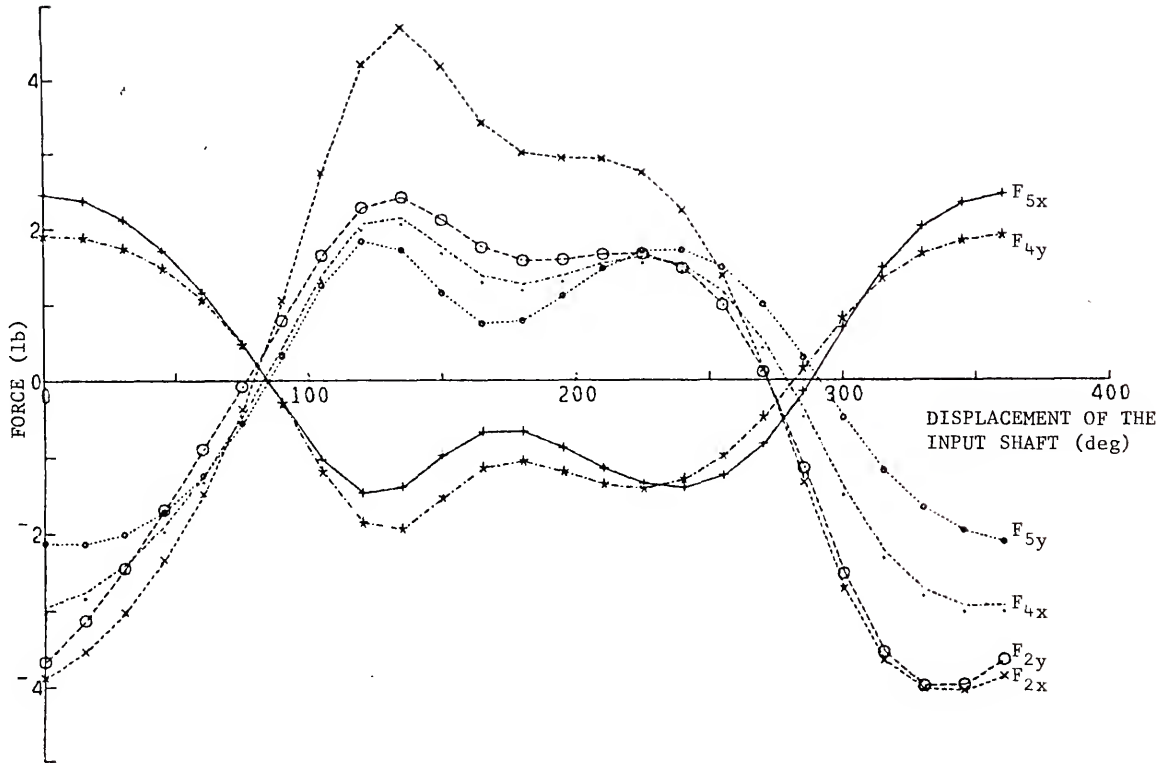

FIG. 4.3.12 Forces on Moving Pin-Joints of Moment Balanced Five-Bar

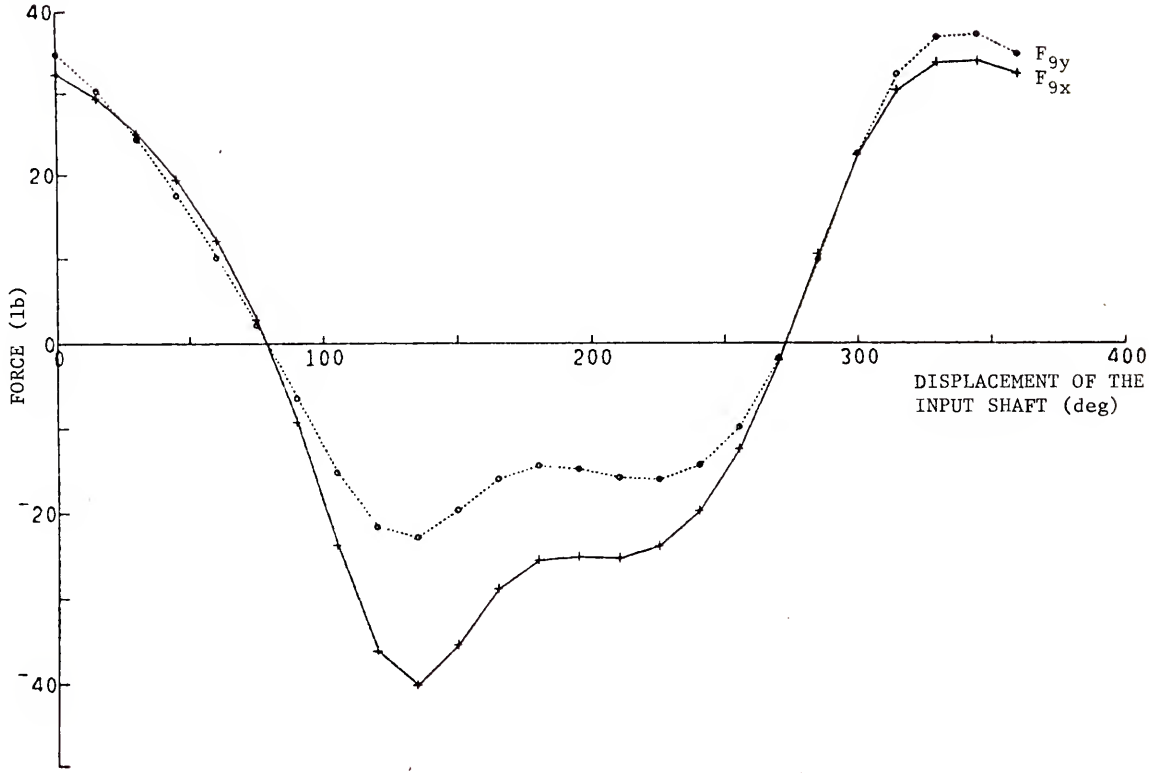

FIG. 4.3.13 Forces on Gear 9c of Moment Balanced Linkage

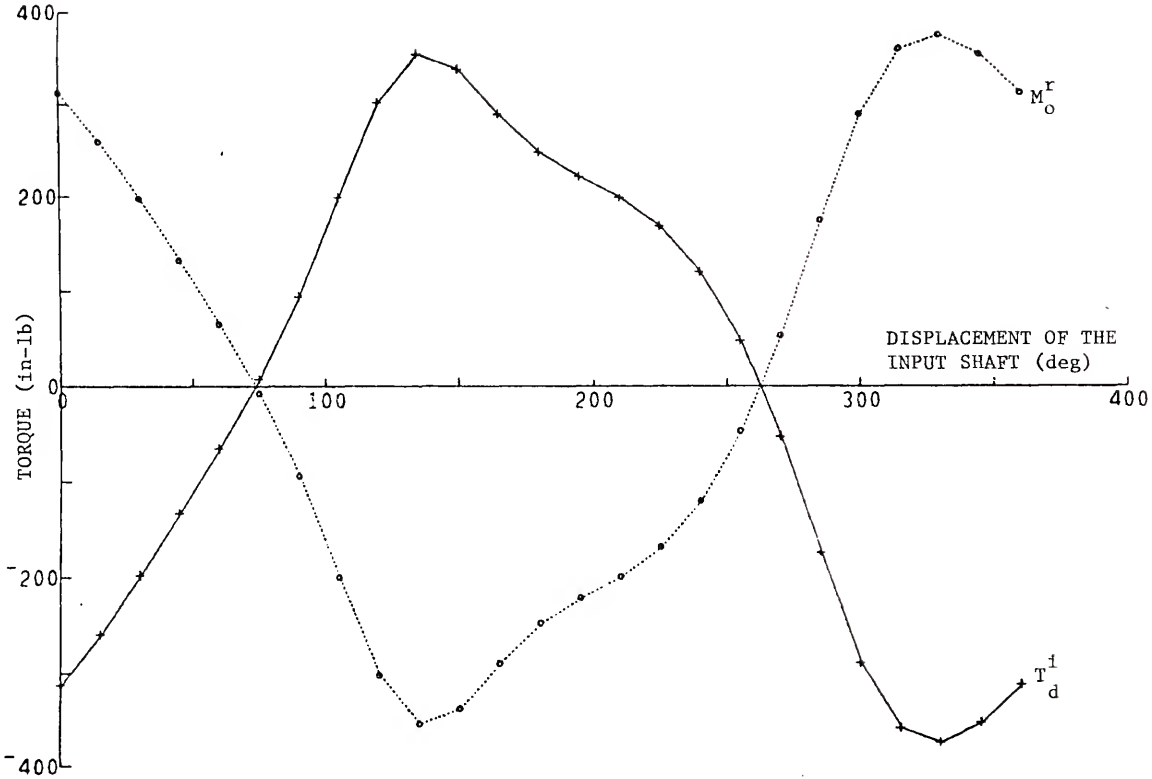

FIG. 4.3.14 Inertia Driving Torque and Rocking Moment of Moment Balanced Five-Bar

shaking moment requiring a 32-fold increase in inertia driving torque. Further note that the forces at pin-joints 2, 3 and 6 and the mounting of the negative inertias could be made smaller if the gears were mounted so that their centers of rotation coincided with the pin-joints. This would result in the transmittal of a couple or pure torque to the moving links and would reduce the pin-joint forces to a level similar to that of the other pin-joints. This placement of the negative inertia gear has been used by the author to achieve balancing with low pin-joint forces. It is the opinion of the author that a better balance can be achieved (i.e., less increase in the bearing forces and driving torque) by establishing a directed search for a proper set of mass parameters. The procedure used for determination of the mass parameters of the balanced mechanism in both cases was to iterate with operator control of the selection of the next choice of a specific parameter based on the current value of some particular mass parameter of interest. For example, pick a new m_{45} in an attempt to reduce the value of inertia, $m_{7a}k_{7a}^2$. This process could be easily automated. The final configuration of the balanced mechanisms is shown in Figs. 4.3.15 and 4.3.16 for the complete force balance and the complete moment balance, respectively. An attempt was made to draw the counterweights so that their relative size to the original mechanism could be observed. Note that the shaking force balancing of the mechanism requires the addition of about five times the mass of the original mechanism. This is probably too much added mass to be of practical use. The balancing for shaking moment required raising the mass content of the mechanism by a factor of ten and the inertia content of the mechanism by a factor of 36. This addition of mass and inertia is clearly evident from

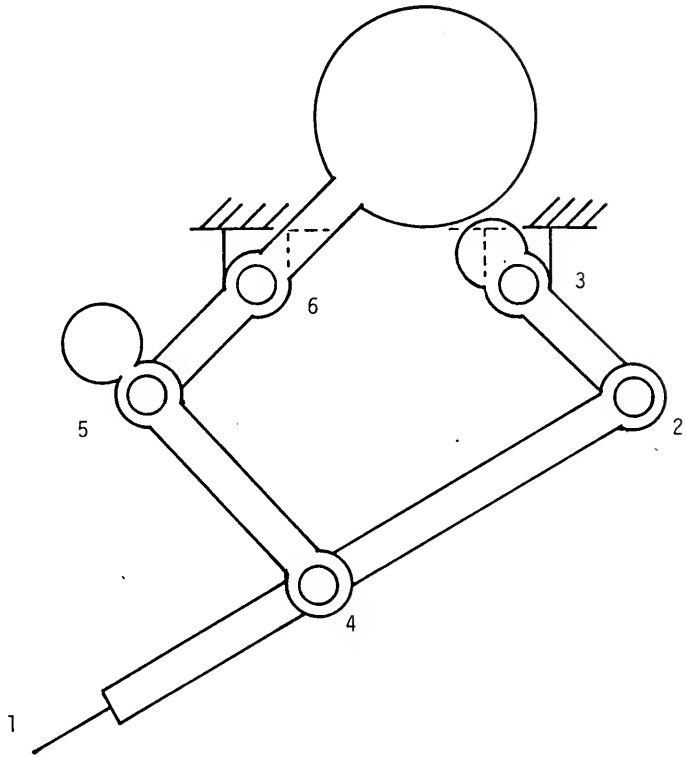

FIG. 4.3.15 Shaking Force Balanced Five-Bar

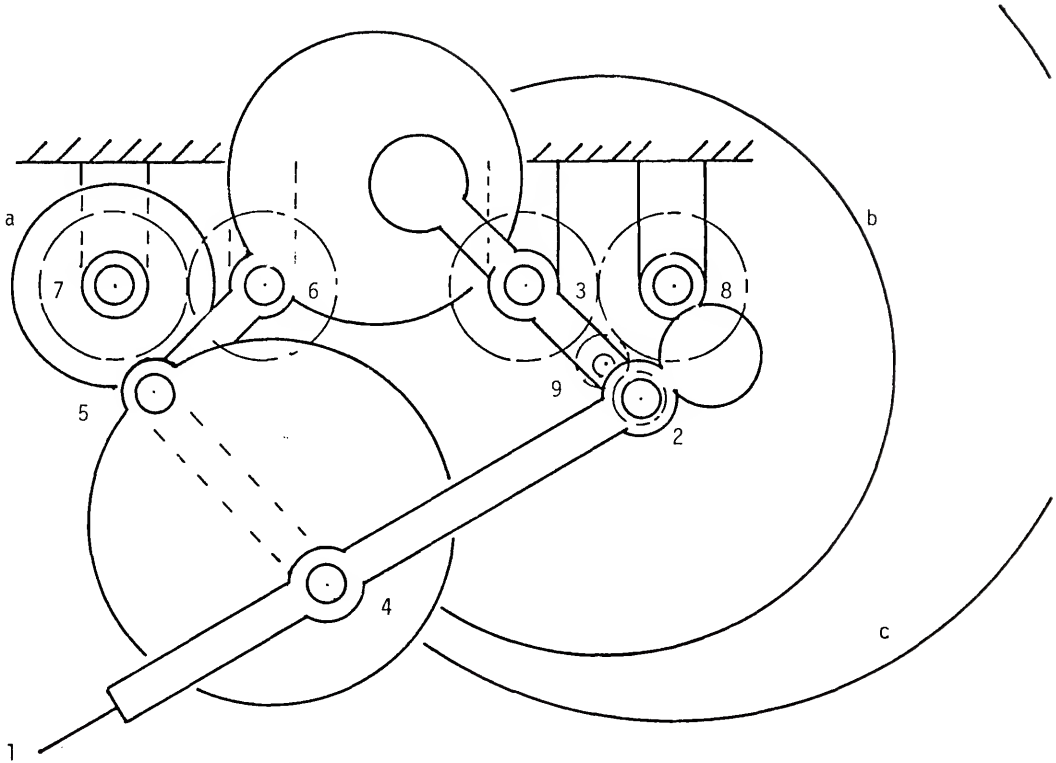

FIG. 4.3.16 Moment Balanced Five-Bar

from Fig. 4.3.16. The counterweights are larger than the original mechanism. This is not in any way a practical balancing of linkage. However, both of these balancing attempts show that the mechanism can indeed be balanced completely.

As a last demonstration of the capabilities of the balancing method presented in this work, the five-bar mechanism was balanced for nonzero shaking moment for eleven positions of the input shaft. The specification was for the shaking moment to have a constant value of 0.2 inch-pounds in the region between 90 degrees and 255 degrees of displacement of the input shaft. This specification was satisfied in terms of the matrix inversion process of Eq. (3.4.3). Again, some iteration was required to determine mass parameters which gave positive values for the moment of inertia of the links and the required counterweights. The mass parameters of the links of the mechanism and the required locations of the counterweights and the moments of inertia of the balancing gears are listed in Tables 4.3.6 and 4.3.7, respectively.

After the mass parameters had been determined, the mechanism was analyzed. Figures 4.3.17 through 4.3.22 illustrate the dynamic properties of the mechanism. A comparison of Figs. 4.3.2 and 4.3.17 shows that the ground reactions of the mechanism have been increased by a fac- of ten to 150. Except for the forces of the balancing gear (see Fig. 4.3.19), the forces in the pin-joints of the dyad 245 have been increased by a factor of four. The driving torque of the mechanism has been increased by about a factor of 32. The shaking moment of the mechanism, as shown in Figs. 4.3.5 and 4.3.21, has been reduced from a peak value of 16.5 (positive) to 0.7 (negative). Also, note that the shaking moment over the specified range is constant at the specified value of

TABLE 4.3.6 Mass Parameters of Non-Zero Shaking Moment Balanced Mechanism

LINK	LOCATION OF CENTER OF GRAVITY		MASS	CENTROIDAL MOMENT OF INERTIA
pq	u_{pq}	v_{pq}	m_{pq}	$m_{pq} k^2_{pq}$
65	0.0854	-0.259	0.0700	0.6726
45	4.000	2.019	0.0200	0.3439
42	14.399	10.365	0.0500	3.5000
32	-3.069	5.711	0.0800	0.3000

TABLE 4.3.7 Mass Parameters of Counterweights and Negative Inertias for Non-Zero Shaking Moment Balanced Mechanism

LINK	LOCATION OF CENTER OF GRAVITY		MASS	CENTROIDAL MOMENT OF INERTIA
pq	u_{pq}	v_{pq}	m_{pq}	$m_{pq} k^2_{pq}$
65	-0.025	-0.0268	0.0675	0.6395
45	3.740	2.484	0.0163	0.2862
42	16.954	12.688	0.0408	0.3622
32	-3.290	5.907	0.0773	0.0854
7a	0	0	0.0150	3.0000
8b	0	0	0.0150	8.5322
9c	0	0	0.0150	2.6358

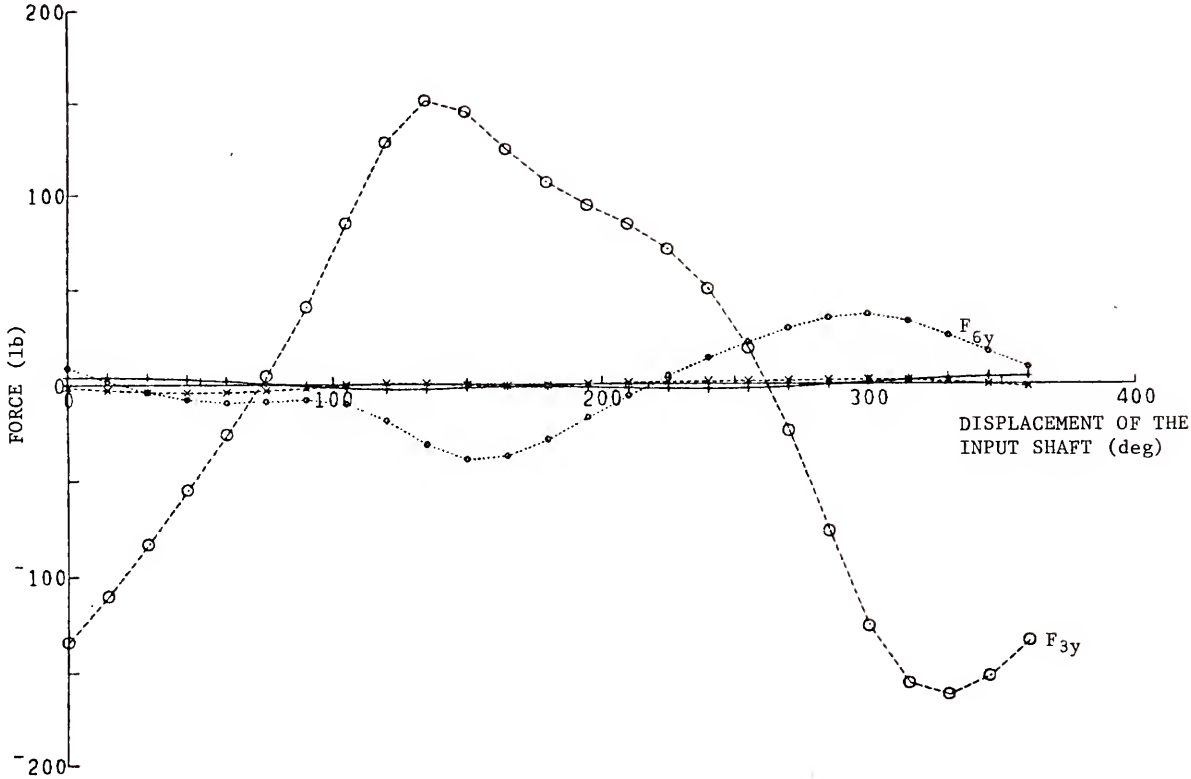

FIG. 4.3.17 Crank Reactions of Non-Zero Moment Balanced Five-Bar

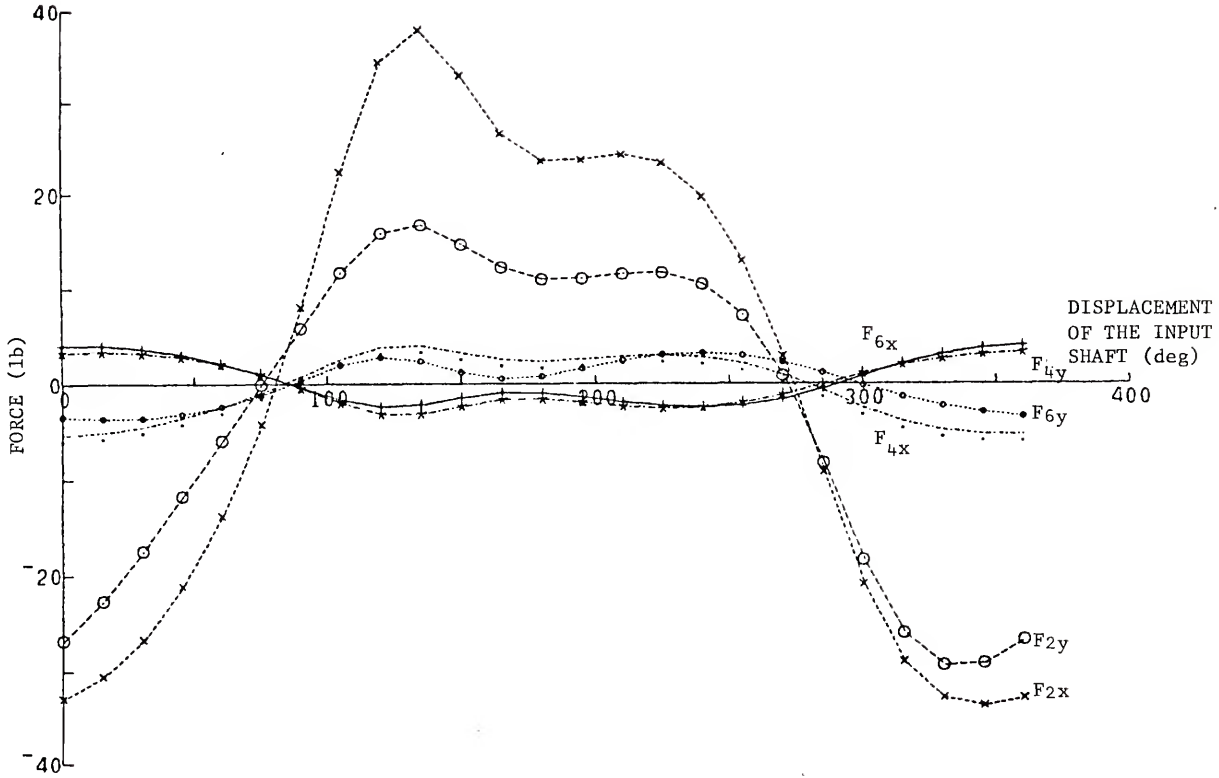

FIG. 4.3.18 Forces in Moving Pin-Joints of Non-Zero Moment Balanced Five-Bar

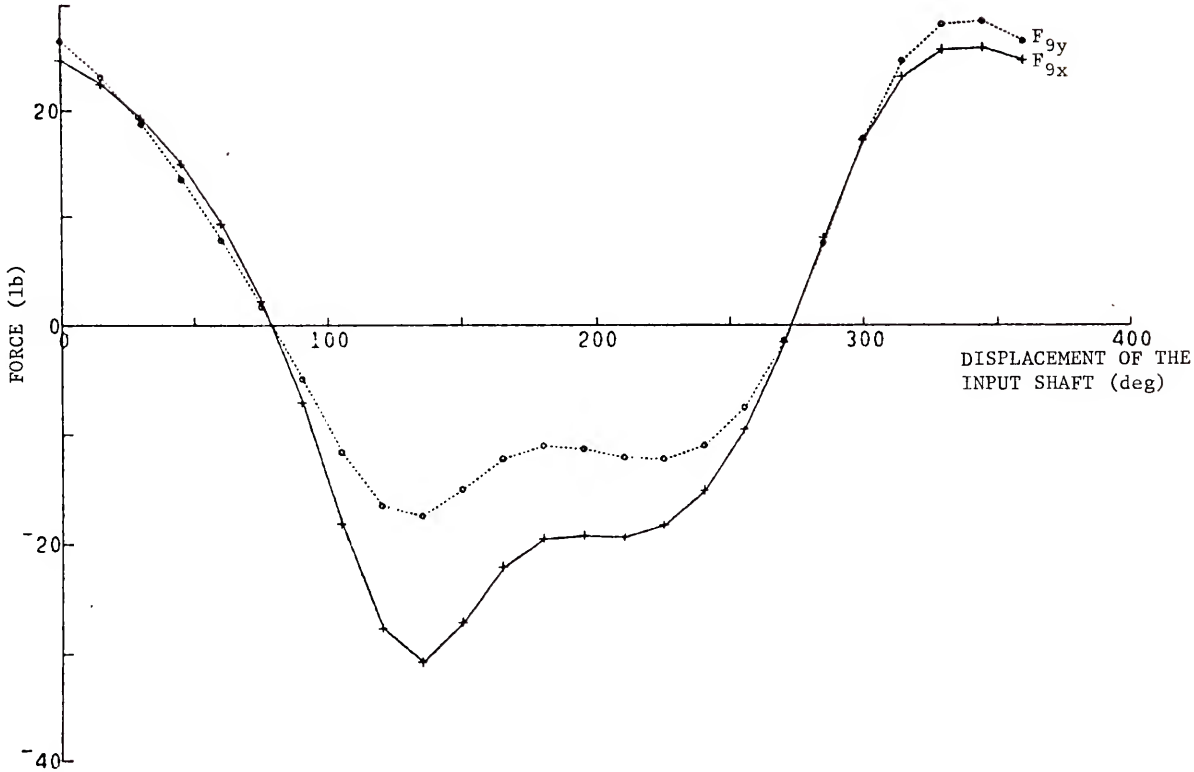

FIG. 4.3.19 Forces at Gear 9c of Non-Zero Moment Balanced Five-Bar

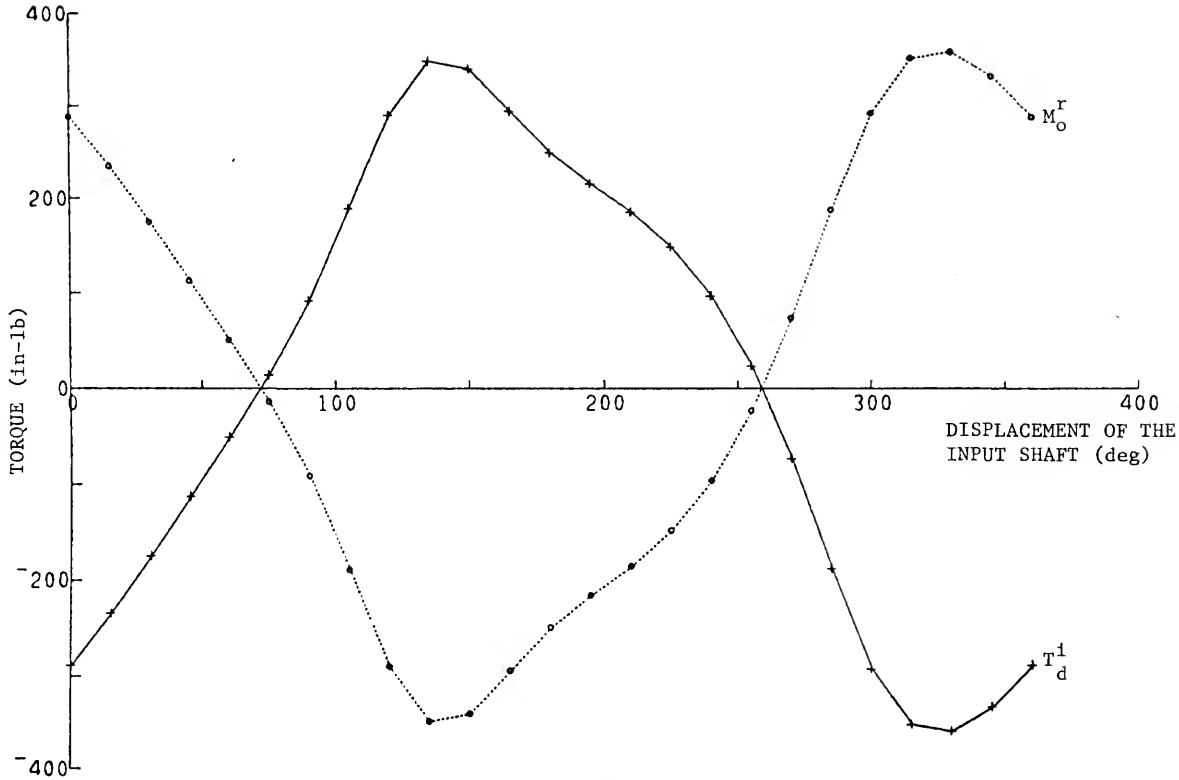

FIG. 4.3.20 Inertia Driving Torque and Rocking Moment of Non-Zero Moment Balanced Five-Bar

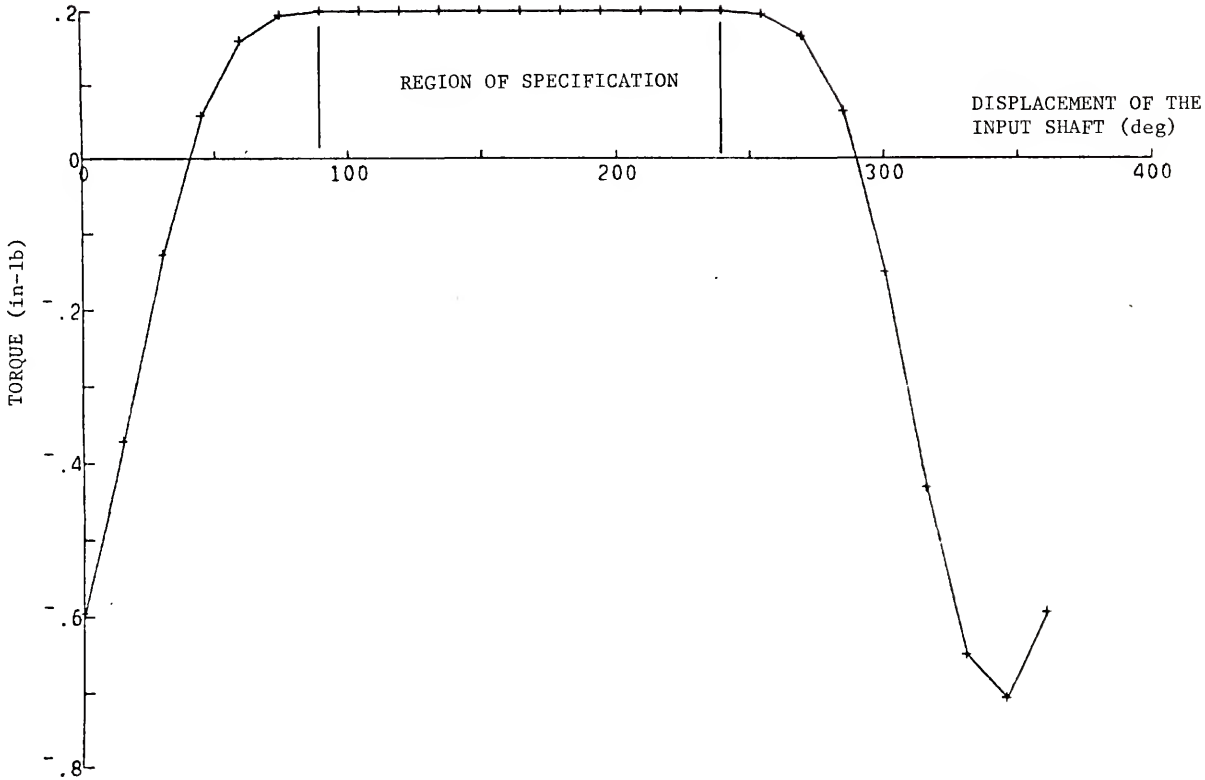

FIG. 4.3.21 Shaking Moment of Non-Zero Moment Balanced Five-Bar

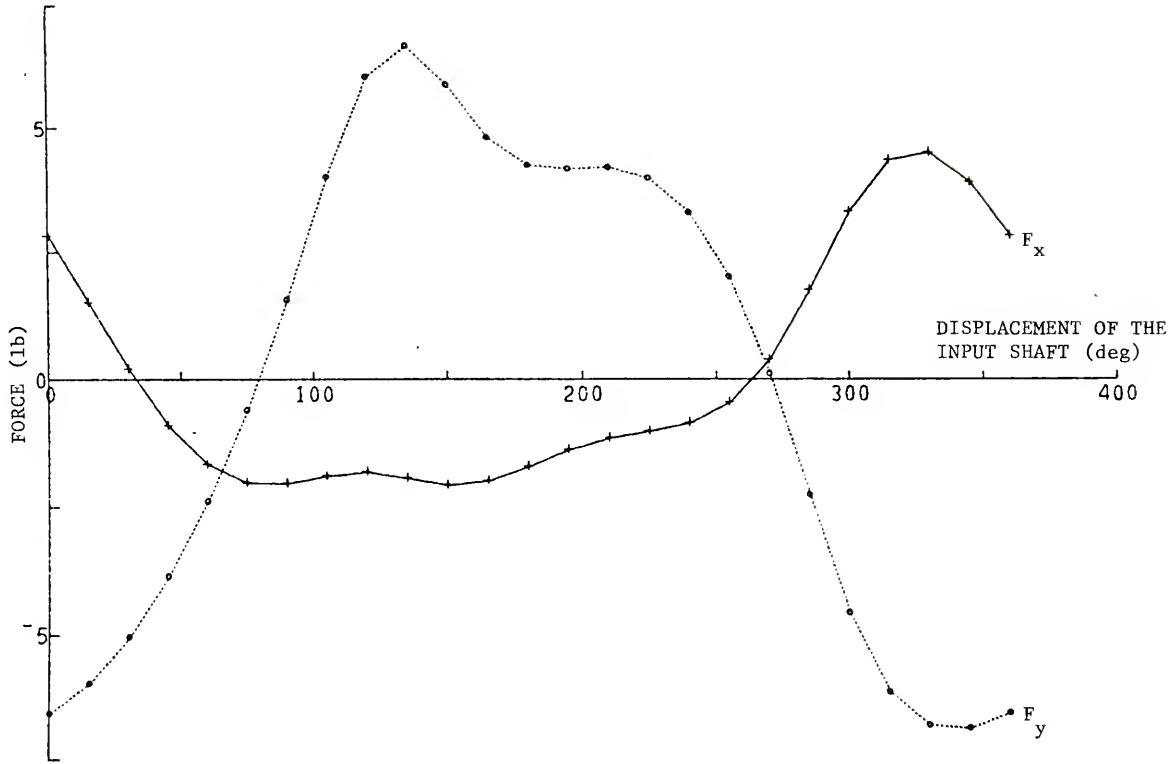

FIG. 4.3.22 Total Shaking Force of Non-Zero Moment Balanced Five-Bar

0.2 inch-pounds. The shaking force of the mechanism has been reduced by a factor of three as is illustrated by Figs. 4.3.6 and 4.3.22. Again, the changes in the other properties of the mechanism could have been improved upon by a more extensive search for the distribution of mass parameters.

As in the previous balancing attempts for the five-bar, the mass content of the linkage was increased greatly by a factor of 15 and the inertia content was again increased by a factor of 36. This is a totally unattractive balancing result. However, the theory and the method have been demonstrated to work with a mechanism of a type that has not been directly balanceable. This example also points out the need for further reseach in the field to determine if there are certain classes of mechanisms that cannot be balanced successfully. This sort of determination, if it could be made before attempting to balance a mechanism, would greatly aid the designer. Also, the author became more cognizant of the fact that some sort of optimization scheme will have to be applied to the search for the balancing mass parameters before this method will become truly attractive for practical use.

4.4 Rules of Thumb

In the use of the balancing methods provided here, a designer would be aided by some guidelines as to the expected results of balancing attempts. The following are an initial attempt to provide that guidance.

1. Expect a 2 or 300 percent increase in the inertia driving torque of any simple mechanism which is completely balanced for shaking moment. An even larger increase may be expected for more complex mechanisms due to required increases in mass and inertia of the links.

2. The driving torque of any mechanism which is shaking force balanced only will increase significally but not to quite the extent as for shaking moment.
3. It is physically impossible to balance any mechanism for constant kinetic energy or zero driving torque using the exact or complete balancing methods.
4. In attempting to balance a mechanism for kinetic energy or inertia driving torque to satisfy non-zero specifications, care must be taken to specify a curve shape which resembles that of the sum of the D^5_{1pq} (or D^6_{1pq}) and D^5_{4pq} (or D^6_{4pq}). Otherwise, the mass parameters required by the solution will not be physically attractive (see Section 4.2).
5. If balancing is attempted first for energy or inertia driving torque and then for shaking force, the balanced inertias of the links must not be disturbed when new locations for the shaking force balancing counterweights are being calculated.

CHAPTER FIVE

CONCLUSIONS

5.1 The Problem

Mechanisms are used as machine components primarily because of their non-linear input-output relationships. Due to their non-linear nature, mechanisms tend to exert time and position varying forces and moments on their surroundings. The elimination or smoothing of these forces and moments would make mechanisms more attractive as machine components. The appropriate distribution or redistribution of the mass content of the links of a mechanism would achieve this goal of making mechanisms more useful in the design of machines.

The main thrust of this work was to find an efficient means of determining the placement and distribution of the mass of the links of mechanisms. To do this, it was necessary to derive a set of balancing conditions or equations for the general mechanism. These balancing conditions, as derived, are applicable to any mechanism.

5.2 Derivations and Methods

In Chapter Two, equations for all of the dynamic properties of mechanisms were derived. Each of these equations was found in two distinct forms. It had previously been demonstrated in Ref. [9] that a set of balancing conditions for a mechanism could be derived only if the equation for some dynamic property of the mechanism were expressed in terms of a linearly independent set of vectors. In Chapter Three, it was shown that

condition was met for any dynamic property expressed in terms of the formulations developed in Chapter Two. From these equations, it was further shown that the balancing conditions were useful in three different ways:

1. Definition of the conditions to completely balance a mechanism is immediately transparent to the designer once the equation for a dynamic property has been derived (i.e., $Y_{ipq} = 0$).
2. It is possible, using the equation for any dynamic property, to satisfy exactly by appropriate mass distribution the specification of several position (or time) dependent values of that property. The number of positions depends on the mechanism and the property for which it is being balanced.
3. The special forms of the equations for dynamic properties of mechanisms should lend itself to efficient use in several established methods of approximate balancing in the literature using well known approximation techniques.

5.3 Restrictions and Limitations

The restrictions to the methods that have been developed are:

1. That the kinematic dimensions of the mechanism to be balanced must be known.
2. That the mechanism be analyzable. The motion of the links must be known.
3. It appears that the method will successfully treat only those mechanisms whose links can be considered as rigid. Since the majority of mechanisms must have this same quality to accomplish their design function, this does not appear to be a great handicap.

The limitations to be found in the application of the methods are:

1. It appears to be impossible to balance a mechanism for constant kinetic energy, or its zero derivatives. This is not surprising as one expects a collection of moving bodies to possess kinetic energy, but it is unfortunate since it limits the benefits that could be obtained from balancing.
2. Negative inertia requirements force increased complexity on the balanced mechanism.
3. Increased driving torque and bearing forces are found in almost any mechanism which is balanced by additions of mass from some design configuration. This addition of mass to the mechanism will result in the doubling or tripling of the inertia driving torque and a concomittant increase in all of the pin-joint forces of the mechanism. This limitation can be surmounted or avoided if some approximate balancing or optimization technique is used with a constraint to limit the increse in driving torque.
4. It appears that, except for special cases, the balancing of a mechanism for dynamic properties should be considered only as a means of controlling the inertia properties of the mechanism and its effect on its surroundings as these are speed dependent. Springs or some other method of balancing should be used to control the effects of work functions or external forces on the mechanism as these are, in the main, position dependent. This is due to the nature of mechanisms in that they may be designed to be lightweight devices overcoming large loads and such a device

will not, in general, be massive enough to overcome, economically, the large work functions that they will typically experience by the addition of mass. Matthew and Tesar, [16] and [17], provide a method of synthesizing springs to overcome external loads.

5.4 Further Research

It is the belief of the author that the equations for the dynamic properties of mechanisms have been presented in this work in a unique form. They have been clearly shown to be presented in such a manner that the kinematic, time and/or position dependent variable terms are separated from the dynamic, constant coefficients. These equations have been presented as the sum of a series of terms each of which consists of one which is a constant and one which is a variable. Because of this generalized canonical form, they lend themselves well to various forms of numerical analysis and classical optimization. Further reseach is clearly necessary in order to explore the application of these equations in terms of approximate or optimal balancing. Dix and Agrawalla [8] have made an attempt at some of the future work that is necessary in balancing planar mechanisms for optimized shaking moment and shaking force conditions using a linearly dependent scheme of balancing by analysis using test masses. Their programming is based on equations similar to Eqs. (2.4.4) and (2.5.4). Sadler [22] has used a similar approach of test mass and inertia content to balance six-bar mechanisms optimizing various of the dynamic properties of the mechanism. Smith [23] has applied the method of linearly independent vectors to the balancing of shaking force in mechanisms and attempts to control the increase of inertia driving torque by using counterweights of minimum inertia.

Further work is necessary in the development of overall indicators for each of the dynamic properties. This work is desirable so that a designer could have for examination a design space wherein it could reasonably be expected that the specification of values of the dynamic property and the solution of the balancing conditions would return a set of mass parameters such that "real" links would result. It is possible that such a set of indicators would be useful in the synthesis portion of the kinematic design of mechanisms as they would allow the acceptance or rejection of a possible mechanism based on its expected dynamic properties. This would be a valuable tool in the latter stages of the design process to allow selection of kinematically satisfactory mechanisms based on their expected dynamic properties before detailed design was started. Hain [13] points out that dynamic problems in mechanisms can sometimes be overcome by changes in the kinematics of the linkages.

A program of experimental demonstration of the validity of the balancing methods provided in this work would be helpful and would be of great assistance toward their acceptance by designers in industry, the ultimate benefactors of this research.

Future work should include the extension of this method to the balancing of spatial mechanisms for all dynamic properties as was done for spatial four-bar mechanisms for shaking force balancing by Kaufman and Sandor [14].

APPENDIX A
GROUNDED LINK ZERO TERMS

The tables provided in this appendix will aid in the use of the methods for balancing developed in Chapter Three. These tables formalized the process of determining that certain of the D_{ipq} of a given equation for some dynamic property are zero. Figures A.1 and A.2 illustrate the various ways that a link can have one of its joints fixed to ground. If a zero appears in a block corresponding to some D_{ipq}, under the superscript designating the dynamic property of concern, then substitute zero for the value of that variable in the general equation for the dynamic property. If there is no entry in the block associated with the D_{ipq} of interest, then it may be assumed that it has a non-zero value.

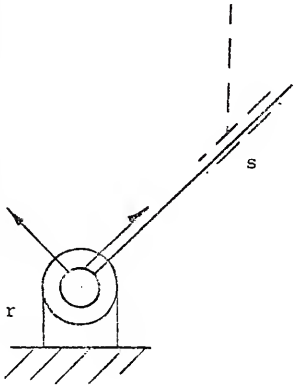

$\dot{U}_r = \dot{V}_r = 0$

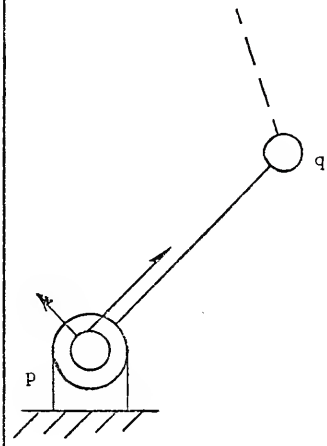

$\dot{U}_p = \dot{V}_p = 0$

$n =$	1	3	5
D^n_{1rs}	0	0	0
D^n_{2rs}			0
D^n_{3rs}			0
D^n_{4rs}	0		

$m =$	2	4	6
D^m_{1pq}	0	0	0
D^m_{2pq}	0		0
D^m_{3pq}			0
D^m_{4pq}			

FIG. A.1 Links Grounded at the Moving Origin

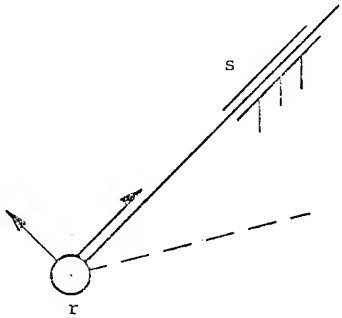

$\dot{\gamma}_{rs} = 0$

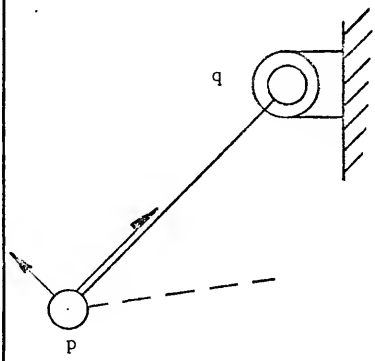

$\dot{U}_q = \dot{V}_q = 0$

$n =$	1	3	5
D^n_{1rs}			
D^n_{2rs}	0		0
D^n_{3rs}	0		0
D^n_{4rs}	0	0	0

$m =$	2	4	6
D^m_{1pq}			
D^m_{2pq}			0
D^m_{3pq}	0		0
D^m_{4pq}	0	0	0

FIG. A.2 Links Not Grounded at the Moving Origin

APPENDIX B
COMMON TERMS ACROSS PIN-JOINTS

Figure B.1 lists the various equalities of the variable terms of the equations for the dynamic properties of planar mechanisms. The table may be used to help eliminate linear dependencies from the matrix formulation of the expression for some dynamic property. The use of the figure is self-evident, requiring only the substitution called for in the left-hand side.

$D^m_{4pq} = D^m_{1qt}$; m = 2, 4, 6. $D^2_{3pq} = D^2_{2qt}$	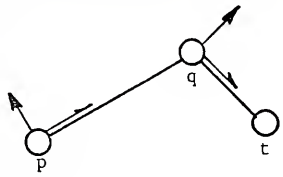
$D^m_{4pq} = D^m_{4qt}$; m = 2, 4, 6. $D^2_{3pq} = D^2_{3qt}$	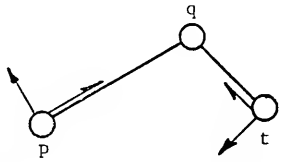
$D^m_{4pq} = D^n_{1qt}$; m = 2, 4, 6, n = 1, 3, 5.	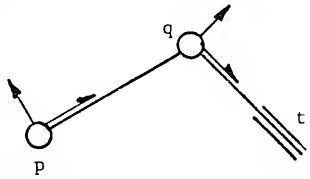
$D^n_{4rs} = D^n_{4ts}$; n = 1, 3, 5. $D^1_{2rs} = D^1_{2ts}$ $D^1_{3rs} = D^1_{3ts}$	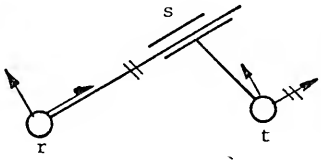
$D^n_{4rs} = D^n_{4ts} = D^n_{4et}$; n = 1, 3, 5. $D^1_{2rs} = D^1_{2ts} = \cos\theta\, D^1_{2et} - \sin\theta\, D^1_{3et}$ $D^1_{3rs} = D^1_{3ts} = \sin\theta\, D^1_{2et} + \cos\theta\, D^1_{3et}$	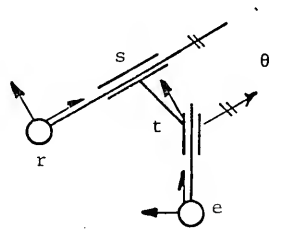

FIG. B.1 Equalities of D_{ipq} About Common Joints

APPENDIX C
A GENERAL NEGATIVE INERTIA

In the complete balancing of mechanisms for total angular momentum and shaking force, it is necessary to include negative inertia. This appendix contains the necessary terms for the treatment of such a balancing inertia as shown in Fig. C.1.

The necessary terms for linear momentum and its derivatives are

$$\begin{aligned}\underset{\sim}{L} = {} & [Y^2_{1tr} + Y^1_{1pq}(a_{tr}u_p)/a_{tr}]D^2_{1tr} + [Y^2_{2tr} + Y^1_{2pq}v_p/a_{pq}]D^2_{2tr} \\ & + [Y^2_{3tr} + Y^2_{2rs} - Y^1_{1pq}v_p/a_{tr}]D^2_{3tr} + Y^2_{3rs}D^2_{3rs} \\ & + Y^2_{4rs}D^2_{4rs} + Y^1_{2pq}D^1_{2pq} + Y^1_{3pq}D^1_{3pq}.\end{aligned} \tag{C.1}$$

The necessary terms for total angular momentum and its derivatives are

$$\begin{aligned}\underset{\sim}{H}_0 = {} & [Y^3_{1tr} + Y^1_{1pq}((a_{tr} - u_p)^2 + v_p^2)/a^2_{tr}]D^4_{1tr} \\ & + [Y^3_{2tr} - Y^1_{4pq} + Y^1_{1pq}(a_{tr}u_p - (u_p^2 + v_p^2))/a^2_{tr}]D^4_{2tr} \\ & + [Y^3_{3tr} + Y^1_{1pq}v_p/a_{tr}]D_{3tr} + [Y^3_{4tr} + Y^3_{1rs} \\ & + Y^1_{4pq}(a^2_{rs} - a^2_{tr})/a^2_{rs}a^2_{tr} + Y^1_{1pq}(u_p^2 + v_p^2)/a^2_{tr}]D^4_{1rs} \\ & + [Y^3_{2rs} + Y^1_{4pq}/a^2_{rs}]D^4_{2rs} + Y^3_{3rs}D^3_{3rs} \\ & + [Y^3_{4rs} - Y^1_{4pq}/a^2_{rs}]D^4_{4rs} + Y^1_{2pq}D^3_{2pq} + Y^1_{3pq}D^3_{3pq}.\end{aligned} \tag{C.2}$$

If one wishes to examine the effect of the above balancing on the kinetic energy and its derivatives of a mechanism, one merely includes the proper terms as defined in Eq. (2.6.2).

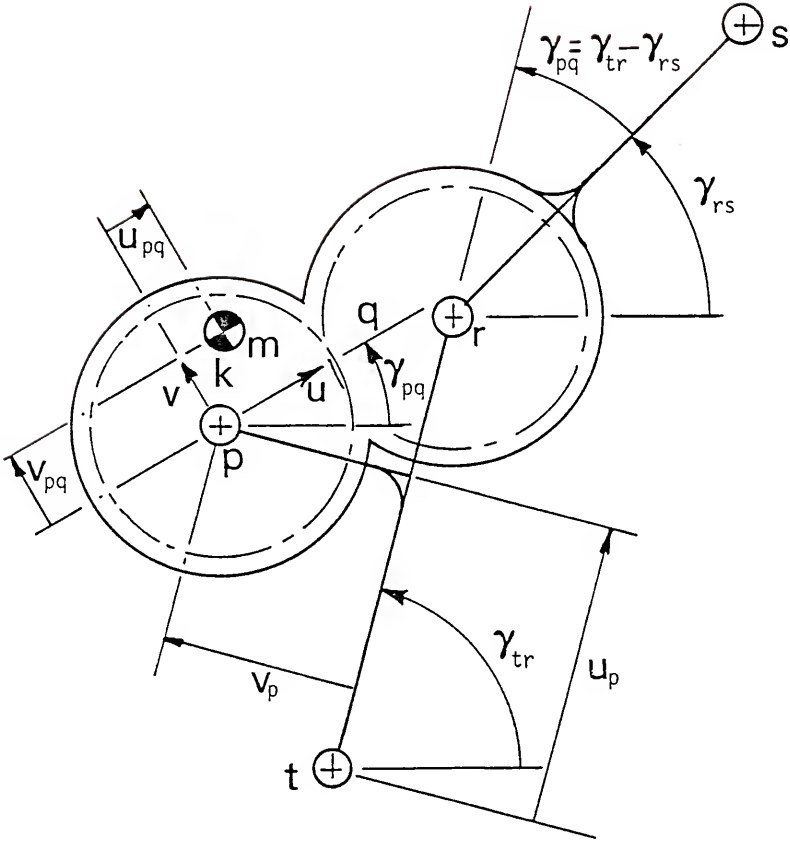

FIG. C.1 General Negative Inertia

APPENDIX D
GENERAL COMPUTER PROGRAMS

The following are the listings of the computer programs for the implementation of the balancing methods of this dissertation. The programs are written in the APL computer language. They are listed in alpha-numerical order. The program names which begin with "D" relate directly to the definitions of the D_{ipq}. The first number following the "D" is the superscript from the definitions in Chapter Two. The second number following the "D" is the subscript "i" from the definitions of the D_{ipq} in Chapter Two. A "P" in the title of a program designates that program as the derivative of the appropriate D_{ipq}.

The program titles which begin with a "Y" contain their descriptions. They are used to calculate the Y_{ipq} of Chapter Two. Their arguments are u, v, m, mk^2 and a for the link. Four of these programs have a "K" in their name; these programs are used if the mass parameters of the link are tabulated as numerical values. The programs without the "K" in the title take as an argument the subscripts of the appropriate data from the DATA string of the dyad analysis of Pollock [21]. The rest of the Y_{ipq} appear to be so straightforward that programs were not written for their calculation.

Also included in this package of general programs are two programs of use in the analysis of a linkage. The first, GEAR, analyses a gear, such as is used for negative inertia, to determine the forces that are exerted on the center of the gear by its support and the torque that must be exerted on the gear by its mate. The second, TDI, is used to calculate

the inertia driving torque of a mechanism once the forces on the end of its input crank are known.

The program, CTWGT, calculates the location of the counterweight, its mass, and the necessary moment of inertia to satisfy a given set of balanced mass parameters, the matrix MUB, and a given set of unbalanced mass parameters, the matrix MUU.

```
0 R←MUB CTWGT MUU
1 R←MUB[;3]-MUU[;3]
2 R←(((MUB[; 3 3]×MUB[; 1 2])-MUU[; 3 3]×MUU[; 1 2])÷⍉(2,ρR
        )ρR),R
3 R←(R,((INERTIA MUB)-INERTIA MUU)-R[;3]×+/R[; 1 2]*2),MUU[
        ;5]
4 ⍝ CALCULATES COUNTERWEIGHT LOCATION AND
5 ⍝ MOMENT OF INERTIA OF COUNTERWEIGHT
6 ⍝ MUB←U,V,M,MK*2,A OF THE LINKS
7 ⍝ MUU←U,V,M,MK*2,A OF THE LINKS
```

```
0 R←D11 B;B1;N
1 R←FA B1[;N+1]+(B1←FR B)[;N←¯1+2×⍳0.5×ρB]
```

```
0 R←D12 B;B1;N;CG;SG
1 R←FA(B1[;N+2]×CG-SG)-((SG←1○B1[;N])+CG←2○B1[;N])×(B1←FR B
        )[;1+N←¯2+3×⍳(ρB)÷3]*2
```

```
0 R←D13 B;B1;N;CG;SG
1 R←FA(B1[;N+2]×-CG+SG)+((SG←1○B1[;N])-CG←2○B1[;N])×(B1←FR
        B)[;1+N←¯2+3×⍳(ρB)÷3]*2
```

```
0 R←D14
1 ⍝ THIS IS A DUMMY PROGRAM  ONLY.  IT PERFORMS NO FUNCTION
        .
2 R←⍳0
```

```
0 R←D21 B;B1;N
1 R←FA B1[;N+1]+(B1←FR B)[;N←¯1+2×⍳0.5×ρB]
```

```
0 R←D22 B;B1;N
1 R←FA B1[;N+1]-(B1←FR B)[;N←¯1+2×⍳0.5×ρB]
```

```
0 R←D23 B;B1;N
1 R←FA B1[;N+1]-(B1←FR B)[;N←¯1+2×⍳0.5×ρB]
```

```
0 R←D24 B;B1;N
1 R←FA B1[;N+1]+(B1←FR B)[;N←¯1+2×⍳0.5×ρB]
```

```
0 R←D31 B;B1;N
1 R←FA(B1[;N+3]×B1[;N])-B1[;N+1]×(B1←FR B)[;2+N←⍳0.25×ρB]
```

```
0 R←D32 B;B1;N;A
1 A←(B1←FR B)[;5+N←¯6+7×⍳(⍴B)÷7]*2
2 R←FA((2○B1[;N+4])×B1[;N+3]+(B1[;N+6]×B1[;N])+B1[;N+1]×B1[
          ;N+5]*2)+(1○B1[;N+4])×(B1[;N+6]×B1[;N+1])-B1[;N+2]
          +B1[;N]×A


0 R←D33 B;B1;N;A
1 A←(B1←FR B)[;5+N←¯6+7×⍳(⍴B)÷7]*2
2 R←FA((2○B1[;N+4])×(B1[;N+6]×B1[;N+1])-B1[;N+2]+B1[;N]×B1[
          ;N+5]*2)-(1○B1[;N+4])×(B1[;N+6]×B1[;N])+B1[;N+3]+B
          1[;N+1]×A


0 R←D34 B
1 R←FA FR B


0 R←D41 B;B1;N
1 R←FA(B1[;N]×B1[;N+3])-B1[;N+2]×(B1←FR B)[;1+N←¯3+4×⍳0.25×
          ⍴B]


0 R←D42 B;B1;N
1 R←B1[;N-6]×(B1←FR B)[;¯1+N←8×⍳(⍴B)÷8]
2 R←FA(B1[;N-4]×B1[;N-3])+(B1[;N]×B1[;N-7])-(B1[;N-2]×B1[;N
          -5])+R


0 R←D43 B;B1;N
1 R←B1[;N-2]×(B1←FR B)[;¯4+N←8×⍳(⍴B)÷8]
2 R←FA(B1[;N-7]×B1[;N-1])+(B1[;N-6]×B1[;N])-(B1[;N-3]×B1[;N
          -5])+R


0 R←D44 B;B1;N
1 R←FA(B1[;N-3]×B1[;N])-B1[;N-2]×(B1←FR B)[;¯1+N←4×⍳0.25×⍴B
          ]


0 R←D51 B;B1;N
1 R←FA 0.5×B1[;N-1]+(B1←(FR B)*2)[;N←2×⍳0.5×⍴B]


0 R←D51P B
1 R←D61P B


0 R←D52 B;B1;N
1 R←FA B1[;N+3]×((2○B1[;N+2])×B1[;N+1])-(1○B1[;N+2])×(B1←FR
          B)[;N←¯3+4×⍳0.25×⍴B]
```

```
0 R←D52P B;C
1 N←9×⍳(⍴B)÷9
2 C←FR B
3 R←((C[;N-7]×C[;N])+(C[;N-5]×C[;N-1])-C[;N-8]×C[;N-1]*2)×2
        ○C[;N-2]
4 R←FA R-((C[;N-8]×C[;N])+(C[;N-6]×C[;N-1])+C[;N-7]×C[;N-1]
        *2)×1○C[;N-2]


0 R←D53 B;B1;N
1 R←FA-B1[;N+3]×((1○B1[;N+2])×B1[;N+1])-(2○B1[;N+2])×(B1←FR
        B)[;N←¯3+4×⍳0.25×⍴B]


0 R←D53P B;C
1 N←9×⍳(⍴B)÷9
2 C←FR B
3 R←(((C[;N-8]×C[;N])+(C[;N-6]×C[;N-1]))-C[;N-7]×C[;N-1]*2)
        ×2○C[;N-2]
4 R←FA R-((C[;N-7]×C[;N])+(C[;N-5]×C[;N-1])+C[;N-8]×C[;N-1]
        *2)×1○C[;N-2]


0 R←D54 B
1 R←FA 0.5×(FR B)*2


0 R←D54P B;C
1 R←FA(FR B[N+1])×FR B[N←⍳(⍴B)÷2]


0 R←D61 B;B1;N
1 R←FA 0.5×B1[;N-1]+(B1←(FR B)*2)[;N←2×⍳0.5×⍴B]


0 D61P B
1 D64P B


0 R←D62 B;B1;N
1 R←FA(B1[;N+3]×B1[;N+1])+B1[;N+2]×(B1←FR B)[;N←¯3+4×⍳0.25×
        ⍴B]


0 D62P B;C;N
1 FA(C[;N-5]×C[;N-3])+(C[;N-7]×C[;N-1])+(C[;N-4]×C[;N-2])+C
        [;N-6]×(C←FR B)[;N←8×⍳(⍴B)÷8]


0 R←D63 B;B1;N
1 R←FA(B1[;N+2]×B1[;N+1])-B1[;N+3]×(B1←FR B)[;N←¯3+4×⍳0.25×
        ⍴B]
```

```
0 D63P B;C;N
1 FA(C[;N-1]×C[;N-6])+(C[;N-3]×C[;N-4])-(C[;N-5]×C[;N-2])+C
        [;N-7]×(C←FR B)[;N←8×⍳(⍴B)÷8]


0 R←D64 B;B1;N
1 R←FA 0.5×B1[;N-1]+(B1←(FR B)*2)[;N←2×⍳0.5×⍴B]


0 D64P B;C;N
1 FA(C[;N-3]×C[;N-1])+C[;N-2]×(C←FR B)[;N←4×⍳(⍴B)÷4]


0 R←GEAR B;A;R1;R2;F
1 →CONTROL 3
2 DATA←DATA,A←FN,0↑⎕←'WHAT ARE GEAR RATIO, MASS, AND MOMENT
          OF INERTIA?'
3 R2←1↑(((-/FR B[9 5])*2)+(-/FR B[10 6])*2)*0.5
4 R←(R1←(A[3]×A[1]×-/FR B[2 4]))÷R2×A[1]÷1+A[1]
5 F←(D0,2)⍴ 1 ¯1
6 R←FA((F×⍉(2,D0)⍴R)×⍉ 1 2 ∘.○FR B[1]),R1
7 ⍝ CALCULATES FORCES AND TORQUES EXERTED ON A GEAR
8 ⍝ STORES FX FY AND TORQUE ON GEAR


0 R←INERTIA M
1 R←M[;4]+M[;3]×+/M[; 1 2]*2
2 ⍝ CALCULATES MOMENT OF
3 ⍝ INERTIA OF A LINK ABOUT
4 ⍝ ONE END, THE MOVING ORIGIN


0 Z←LINKS B
1 Z←(×/B[1 2 3 4])÷386.4
2 Z←Z,Z×(+/B[1 2]*2)÷12
3 ⍝ CALCULATES MASS AND MK*2
4 ⍝ B←L,W,T,⍴


 0 Z←M TDI B;C
 1 Z←(FR B[6])×-/FR B[3 1]
 2 Z←Z-(FR B[5])×-/FR B[4 2]
 3 ⍝B← FILE NOS. XP,YP,XC,YC,FX,FY,λ,Y,X¨,Y¨,θ¨
 4 ⍝ MS← MASS, MK*2
 5 ⍝CALCULATES TORQUE FROM FORCES AT END OF CRANK∇
 6 C←M[1]×((-/FR B[7 1])*2)+((-/FR B[8 2])*2)
 7 N←(M[2]+C)×FR B[11]
 8 C←M[2]×FR B[11]
 9 N←C+M[1]×((FR B[10])×-/FR B[7 1])-(FR B[9])×-/FR B[8 2]
10 L1:Z←FA N-Z
```

```
0 R←Y31 B1;B
1 R←⍳0
2 L1:B1←(⍴B←DATA[5↑B1])↓B1
3 R←R,((B[3]×(+/(B[2],-/B[5 1])*2))+B[4])÷B[5]*2
4 →(5≤⍴B1)/L1
5 ⍝CALCULATES Y1PQ FOR PIN-JOINTED LINKS
6 ⍝ B← U,V,M,I,A,M.S.
```

```
0 R←Y31K B1;B
1 R←⍳0
2 L1:B1←(⍴B←5↑B1)↓B1
3 R←R,((B[3]×(+/((B[2]),-/B[5 1])*2))+B[4])÷B[5]*2
4 →(5≤⍴B1)/L1
5 ⍝CALCULATES Y1PQ FOR PIN-JOINTED LINKS
6 ⍝ B← U,V,M,I,A,M.S.
```

```
0 R←Y32 B1;B
1 R←⍳0
2 L1:B1←(⍴B←DATA[5↑B1])↓B1
3 R←R,((B[3]×((×/B[1 5])-+/B[1 2]*2))-B[4])÷B[5]*2
4 →(5≤⍴B1)/L1
5 ⍝ CALCULATES Y2PQ FOR  PIN-JOINTED LINKS
6 ⍝B←U,V,M,I,A,M.S.
```

```
0 R←Y32K B1;B
1 R←⍳0
2 L1:B1←(⍴B←5↑B1)↓B1
3 R←R,((B[3]×((×/B[1 5])-+/B[1 2]*2))-B[4])÷B[5]*2
4 →(5≤⍴B1)/L1
5 ⍝ CALCULATES Y2PQ FOR  PIN-JOINTED LINKS
6 ⍝B←U,V,M,I,A,M.S.
```

```
0 R←Y33 B1;B
1 R←⍳0
2 L1:B1←(⍴B←DATA[5↑B1])↓B1
3 R←R,(×/B[2 3])÷B[5]
4 →(5≤⍴B1)/L1
5 ⍝ CALCULATES Y3PQ FOR PIN-JOINTED LINKS
6 ⍝B←U,V,M,I,A,M.S.
```

```
0 R←Y33K B1;B
1 R←⍳0
2 L1:B1←(⍴B←5↑B1)↓B1
3 R←R,(×/B[2 3])÷B[5]
4 →(5≤⍴B1)/L1
5 ⍝ CALCULATES Y3PQ FOR PIN-JOINTED LINKS
6 ⍝B←U,V,M,I,A,M.S.
```

```
0 R←Y34 B1;B
1 R←⍳0
2 L1:B1←(⍴B←DATA[5↑B1])↓B1
3 R←R,((B[3]×+/B[1 2]*2)+B[4])÷B[5]*2
4 →(5≤⍴B1)/L1
5 ⍝CALAULATES Y4PQ FOR PIN-JOINTED LINKS
6 ⍝ B←U,V,M,I,A,M.S.
```

```
0 R←Y34K B1;B
1 R←⍳0
2 L1:B1←(⍴B←5↑B1)↓B1
3 R←R,((B[3]×+/B[1 2]*2)+B[4])÷B[5]*2
4 →(5≤⍴B1)/L1
5 ⍝CALAULATES Y4PQ FOR PIN-JOINTED LINKS
6 ⍝ B←U,V,M,I,A,M.S.
```

APPENDIX E
COMPUTER PROGRAMS FOR SECTION 4.2

The programs contained in this appendix were written to analyze the five-bar example of Chapter Three. They are based primarily on the work of Pollock [21] for analysis and the programs in Appendix D for synthesis of the required mass parameters. A brief description of each follows:

CHANGE. Substitutes the known mass values in a matrix form into the data string for the dyad program using DD as the required subscripts.

FIVE. Analyses the five-bar for determination of its kinematics.

FIVEM. Analyses the five-bar for forces and torque using negative values for the inertias calculated for balancing if such occur.

FIVES. Analyses the five-bar with real mass content. It includes three balancing gears as does the example.

FORCEBAL. This program calculates the mass parameters for a completely force balanced five-bar.

FOUR. Generates the coupler curve to drive the endpoint of the five-bar in the example.

PROB. Calculates the mass parameters for the shaking moment balancing of the example. This balancing can be accomplished for complete balancing or for non-zero balancing. In the program, X is an eleven element string, the left-hand side of

the balancing equation. The variable MS is a matrix containing the mass parameters of the links and the lengths of each link. The argument B is a string of eleven elements, the arbitrary choices used in Chapter Four.

PROPS. This program calculates the mass parameters from the direct solution of the equations. It generates the negative inertias for use in FIVEM.

PR1, PR2 PR3, PR4. These four small programs are used in PROPS and PROB. They are used to solve a given pair of simultaneous equations.

YNO. This program calculates all of the Y^3_{ipq} for any linkage.

Y5, Y5K. These two programs calculate the Y^3_{ipq} for the five-bar and find the sums to form the coefficients of the balancing equation for the mechanism when negative inertia gears are not used.

Y5B. This program calculates the constant coefficients of the balancing equation when the negative inertia gears are used. Its argument is the matrix, such as MS, of mass parameters of the mechanism.

```
 0 CHANGE B
 1 DATA[DD]←B
 2 DATA[58,49+⍳8]←DATA[46,24+⍳8]
```

```
 0 FIVE
 1 GF←(D0,1)⍴1
 2 FA G
 3 GF← 0 1 ↓GF
 4 CONTROL 0
 5 PIVOT
 6 PIVOT
 7 D111(⍳6),9+⍳6
 8 XEYE1(24+⍳3),⍳6
 9 D111(33+⍳6),18+⍳6
10 XEYE1(27+⍳3),(9+⍳6),(39+⍳3),33+⍳6
```

```
 0 FIVEM
 1 XEYE1(24+⍳3),(33+⍳6),(27+⍳3),(9+⍳6),(39+⍳3),(33+⍳6),(42+
        ⍳3),18+⍳6
 2 FA((D0,6)⍴(180÷⍉WE), 0 0)+FR 25 26 27 40 41 42
 3 B← 103 105 58 59
 4 D111FORCES B, 100 102 49 50 85 86 89 90 67 68 71 72 ,10⍴
        15
 5 CRANKFORCES ¯106 ¯107 98 99
 6 CRANKFORCES ¯108 ¯109 80 81
 7 B← 34 35 38 39 49 50 53 54 10 11 14 15 49 50 53 54
 8 D42 B← 19 20 23 24 58 59 62 63 34 35 38 39 58 59 62 63 ,
        B
 9 D43 B
10 D44 C← 58 59 62 63 34 35 38 39 49 50 53 54
11 DATA[31 57] TDI 19 20 58 59 ¯106 ¯107 94 95 98 99 45
12 DATA[32 59] TDI 10 11 49 50 ¯108 ¯109 76 77 80 81 30
13 FA(FR 115+⍳11)+.×Y5 DS
14 FA+/(FR 10 19)×(FR 115 113)
```

```
 0 FIVES
 1 GF←(D0,63)↑GF
 2 D←16
 3 FIVEM
 4 PIVOT
 5 PIVOT
 6 XEYE1(27+⍳3),9+⍳6
 7 GEAR 15 15 43 45 134 135 138 139 19 20
 8 GF[;9]←D0⍴○1
 9 GEAR 9 15 28 30 143 144 147 148 10 11
10 GEAR 28 30 100 102 152 153 156 157 49 50
11 XEYE1(27+⍳3),9+⍳6
12 B← 103 105 58 59
13 B←B, 100 102 49 50 85 86 89 90 67 68 71 72
```

```
14 D111FORCES B←B,(4ρ15), 170 171 164 165 15 15
15 CRANKFORCES ¯176 ¯177 98 99
16 CRANKFORCES ¯178 ¯179 80 81
17 DATA[31 59] TDI 19 20 58 59 ¯176 ¯177 94 95 98 99 45
18 DATA[32 61] TDI 10 11 49 50 ¯178 ¯179 76 77 80 81 30
19 T∆TDI←⍳0
20 DATA[46 2] TDI 10 11 152 153 ¯164 ¯165 152 153 156 157 3
        0
21 T∆TDI←⍳0
22 CRANKFORCES ¯164 ¯165 156 157
23 FA+/FR 186 187 188 ¯160 ¯163
24 FA(FR 184 185)+FR 189 190
25 FA(FR 182 183 192 193)-FR 158 159 161 162
26 FA+/FR 158 161 194 196
27 FA+/FR 159 162 195 197
28 FA+/(FR 10 19 134 143)×FR 197 195 159 162
29 FA+/FR 191 200
30 'MO'
31 MO←MM+.×Y5B DATA[DD]
```

```
0 FORCEBAL B
1 MS[1;1]←-(MS[2;3]+MS[3;3]×(-/MS[3; 5 1])÷MS[3;5])×÷/MS[1;
          5 3]
2 MS[1;2]←((×/MS[3; 2 3])÷MS[3;5])×÷/MS[1; 5 3]
3 MS[2;1]←(MS[2;3]+MS[3;3]×(-/MS[3; 5 1])÷MS[3;5])×÷/MS[2;
        5 3]
4 MS[2;2]←-((×/MS[3; 2 3])÷MS[3;5])×÷/MS[2; 5 3]
5 MS[4;1]←-((×/MS[3; 1 3])÷MS[3;5])×÷/MS[4; 5 3]
6 MS[4;2]←-((×/MS[3; 2 3])÷MS[3;5])×÷/MS[4; 5 3]
7 ⍝ CALCULATES MASS PLACEMENT FOR COMPLETELY FORCE BALANCED
          LINKAGE
```

```
0 FOUR
1 CONTROL 0
2 CRANK
3 GF← 0 1 ↑GF
4 PIVOT
5 D111(5+⍳6),14+⍳6
6 XEYE1(20+⍳3),5+⍳6
7 G←FR 29+⍳6
```

```
 0 PROB B;X4;Z
 1 →2×11=ρB
 2 MS← 7 5 ρ0
 3 MS[4+⍳3; 1 2]← 3 2 ρ 0 0 0 0 4.72 0
 4 MS[;5]← 6.24 10.23 14.52 6.72 , 1 1 1
 5 MS[;3]←7↑B
 6 MS[⍳3;2]←X[4+⍳3]×÷/MS[⍳3; 5 3]
 7 MS[2;1]←B[11]
 8 MS[5;4]←B[8]
 9 MS[2;4]←PR1 X[2],MS[2;]
```

```
10 MS[4;2]←(X[8]-(×/MS[7; 3 2])÷MS[4;5])×÷/MS[4; 5 3]
11 Z←X[9]+((×/MS[5; 4 5])÷MS[1;5]*2)-Y34K MS[2;]
12 MS[1;1]←PR2(X[1]-(×/MS[5; 4 5])÷MS[1;5]*2),Z,MS[1;]
13 MS[1;4]←PR3 Z,MS[1;]
14 MS[3;1]←PR4 X[3 10],(Y31K MS[2;]),MS[3;]
15 MS[3;4]←B[9]
16 MS[7;4]←(X[3]-Y32K MS[3;])×MS[3;5]*2
17 L1:MS[4;4]←B[10]
18 L2:X4←-((×/MS[7; 3 1])÷MS[4;5])+Y34K MS[3;]
19 X4←λ4+(×/MS[7; 4 5])÷MS[3;5]*2
20 MS[4;1]←(X[4]+X[11]+X4)×÷/MS[4; 5 3]
21 X4←(+/Y34K,MS[3 4 ;])+MS[7;3]×(+/MS[7; 1 2]*2)÷MS[4;5]*2
22 X4←X4+(×/MS[7; 4 5])×(-/MS[3 4 ;5]*2)÷×/MS[3 4 ;5]*2
23 MS[6;4]←(X4-λ[11])×(MS[4;5]*2)÷MS[6;5]
24 DATA[7 5 ρDD]←MS
25 DATA[58,49+ι8]←DATA[46,24+ι8]
26 ⍝ CALCULATES MASS PARAMETERS FOR THE 5-BAR EXAMPLE
27 ⍝INCLUDES BALANCING GEARS
28 ⍝ MS←MASS PARAMETERS (ρMS)=7 5
29 ⍝ B←M65,M45,M42,M32,M7,M8,M9,I7,I42,I32,A45
30 MS
```

```
 0 PROPS;Z;M
 1 M←4ρ0.015
 2 MS← 4 5 ρ0
 3 MS[;5]← 6.24 10.23 14.52 6.72
 4 MS[;3]←M[ι4]
 5 MS[;2]←X[4+ι4]×÷/MS[; 5 3]
 6 MS[1;1]←¯3
 7 MS[1;4]←PR1 X[1],MS[1;]
 8 Z←X[9]-Y34K MS[1;]
 9 MS[2;1]←PR2 X[2],Z,MS[2;]
10 MS[2;4]←PR3 Z,MS[2;]
11 MS[3;1]←PR4 X[3 10],(Y31K MS[2;]),MS[3;]
12 MS[3;4]←PR1 X[3],MS[3;]
13 Z←X[11]-Y34K MS[3;]
14 MS[4;1]←PR2 X[4],Z,MS[4;]
15 MS[4;4]←PR3 Z,MS[4;]
16 ⍝ CALCULATES MASS PARAMETERS FOR
17 ⍝ THE EXAMPLE FIVE-BAR
18 ⍝ MS← MATRIX WHOSE ROWS ← U,V,M,MK*2,A
19 DATA[4 5 ρDS]←MS
```

```
0 Z←PR1 B
1 Z←(×/B[2 4 6])-(B[1]××/B[6 6])+B[4]×+/B[2 3]*2
2 ⍝ B←X[I],U,V,M,0,A
3 ⍝CALCULATES MK*2
```

```
0 Z←PR2 B
1 Z←(+/B[1 2])×÷/B[7 5]
2 ⍝B← λ[I], I4PQ, U,V,MK*2,A
```

```
3 ⍝ CALCULATES UPQ


0 Z←PR3 B
1 Z←(×/B[1 6 6])-B[4]×+/B[2 3]*2
2 ⍝ B←Z,U,V,M,MK*2,A
3 ⍝ CALCULATES MK*2


0 Z←PR4 B
1 Z←(B[3]+B[6]-+/B[1 2])×÷/B[8 6]
2 ⍝B←X[3],X[10],Y345K,U,V,M,MK*2,A
3 ⍝ CALCULATE UPQ


0 R←YNO B
1 R←(Y11,B),(Y12,B),(Y13,B),Y14,B
2 ⍝ CALCULATES ALL YIPQ FOR A
3 ⍝ PIN+JOINTED LINKAGE
4 ⍝ B IS A MATRIX WHOSE ROWS ARE U,V,M,I,A


0 Z←Y5 B
1 Z←(Y32 B),(Y33 B),(+/Y34 10↑B),(+/Y31 10↑5↓B),+/Y34 10↓B
2 ⍝CALCULATES CONSTANT COEFF. FOR A 5-BAR, FROM DATA[B]
3 ⍝ B← SUBSCRIPTS FOR U,V,M,MK*2,A;M.S.


 0 Z←Y5B B;Y;YS
 1 YS←Y5 DS
 2 Z←YS[1]+(×/B[5; 4 5])÷B[1;5]*2
 3 Z←Z,YS[2]
 4 Z←Z,YS[3]+(×/B[7; 4 5])÷B[3;5]*2
 5 Y←(×/B[6; 4 5])+(B[7;3]×(B[4;5]×B[7;1])-+/B[7; 1 2]*2)-×
        /B[7; 5 4]
 6 Z←Z,YS[4]+Y÷B[4;5]*2
 7 Z←Z,YS[5 6 7]
 8 Z←Z,YS[8]+(×/B[7; 3 2])÷B[4;5]
 9 Z←Z,YS[9]-(×/B[5; 4 5])÷B[1;5]*2
10 Z←Z,YS[10]-(×/B[7; 4 5])÷B[3;5]*2
11 Y←(B[7;3]×+/B[7; 1 2]*2)÷B[4;5]*2
12 Y←Y+(×/B[7; 4 5])×(-/B[3 4 ;5]*2)÷×/B[3 4 ;5]*2
13 Z←Z,YS[11]+Y-(×/B[6; 4 5])÷B[4;5]*2


0 Z←Y5K B
1 Z←(Y32K B),(Y33K B),(+/Y34K 10↑B),(+/Y31K 10↑5↓B),+/Y34K
        10↓B
```

REFERENCES

1. Bagci, C., "Shaking Force and Shaking Moment Balancing of the Plane Slider-Crank Mechanism," Proceedings of the Fourth OSU Applied Mechanisms Conference, Paper No. 25, 1975.

2. Balasubramanian, S. and C. Bagci, "Design Equations for the Complate Shaking Force Balancing of Six-Bar Mechanisms," Proceedings of the Fifth OSU Applied Mechanisms Conference, Paper No. 28, 1977.

3. Berkof, R. S., "Complete Force and Moment Balancing of In-Line Four-Bar Linkages," Mechanism and Machine Theory, Vol. 9, 1973, pp. 397-410.

4. Berkof, R. S., "The Input Torque in Linkages," Mechanism and Machine Theory, Vol. 14, 1978, pp. 61-73.

5. Berkof, R. S. and G. G. Lowen, "A New Method for Completely Force Balancing Simple Linkages," Trans. of the ASME, Journal of Engineering for Industry, Vol. 91, February 1969, pp. 21-26.

6. Berkof, R. S. and G. G. Lowen, "Theory of Shaking Moment Optimization of Force-Balanced Four-Bar Linkages," Trans. of the ASME, Journal of Engineering for Industry, Vol. 93, Series B, 1971, pp. 53-60.

7. Carson, W. L. and J. M. Stephens, "Feasible Parameter Design Spaces for Force and Root-Mean-Square Moment Balancing and In-Line 4R-4-Bar Synthesized for Kinematic Criteria," Proceedings of the Fifth OSU Applied Mechanisms Conference, Paper No. 26, 1977.

8. Dix, R. C. and Agrawalla, "Balancing Using a General Mechanism Program," Proceedings of the Fourth OSU Applied Mechanisms Conference, Paper No. 27, 1975.

9. Elliott, J. L., Mass Synthesis for Multiple Balancing Criteria of Planar, Four-Line Mechanisms, Masters Thesis, University of Florida, August 1977, Unpublished.

10. Elliott, J. L. and D. Tesar, "The Theory of Torque, Shaking Force and Shaking Moment Balancing of Four-Link Mechanisms," Trans. of the ASME, Journal of Engineering for Industry, Vol. 99, Series B, No. 1, August 1977, pp. 715-722.

11. Elliott, J. L., D. Tesar and G. K. Matthew, "Partial Dynamic State Synthesis by Use of Mass Parameters in a System Coupler Link," Trans. of the ASME, Journal of Engineering for Industry, Vol. 101, Series B, No. 2, August 1979, pp. 246-249.

12. Freudenstein, F. and G. N. Sandor, "Synthesis of Path-Generating Mechanisms by Means of a Programmed Digital Computer," Trans. of the ASME, Journal of Engineering for Industry, Vol. 81, May 1959, pp. 159-168.

13. Hain, K., Applied Kinematics, McGraw-Hill, New York, 1964.

14. Kaufman, R. E. and G. N. Sandor, "Complete Force Balancing of Spatial Linkages," Trans. of the ASME, Journal of Engineering for Industry, Vol. 93, May 1971, pp. 620-626.

15. Lowen, G. G. and R. S. Berkof, "Determination of Force-Balanced Four-Bar Linkages with Optimum Shaking Moment Characteristics, Trans. of the ASME, Journal of Engineering for Industry, Vol. 93, Series B. 1971, pp. 39-46.

16. Matthew, G. K., The Closed Form Synthesis of Spring Parameters to Balance Given Force Functions in Planar Mechanisms, PhD. Dissertation, University of Florida, August 1975.

17. Matthew, G. K., and D. Tesar, "Synthesis of Spring Parameters to Balance General Forcing Functions in Planar Mechanisms," Trans. of the ASME, Journal of Engineering for Industry, Vol. 99, Series B, 1977, pp. 347-352.

18. Noble, B., Applied Linear Algebra, Prentice-Hall, New Jersey, 1969, p. 136.

19. Ogawa, K. and H. Funabashi, "On the Balancing of the Fluctuating Input Torques Caused by Inertia Forces in the Crank-Rocker Mechanisms," Trans. of the ASME, Journal of Engineering for Industry, Paper 68-MECH-18, 1968.

20. Paul, B., Kinematics and Dynamics of Planar Machinery, Prentice-Hall, New Jersey, 1979.

21. Pollock, S. F., Dynamic Model Formulation Programmed for Dyad Based Machines, Masters Thesis, University of Florida, August 1975, Unpublished.

22. Sadler, J. P., "Balancing of Six-Bar Linkages by Nonlinear Programming," Proceedings of the Fourth World Congress of the Theory of Machines and Mechanisms, Vol. 1, Paper No. 26, 1975.

23. Smith, M. R., "Optimal Balancing of Planar Multi-Bar Linkages," Proceedings of the Fourth World Congress on the Theory of Machines and Mechanisms, Vol. 1, Paper No. 26, 1975.

24. Spitznagel, K. L., Multiparametric Optimization of Four-Bar and Six-Bar Linkages, PhD Dissertation, University of Florida, December 1978.

25. Tesar, D., "Design Methods for the 4, 5, and 6-Bar Linkages," EML-3202, Class Notes, University of Florida, Unpublished, 1978.

26. Tepper, F. R. and G. C. Lowen, "General Theorems Concerning Full Force Balancing of Planar Linkages by Internal Mass Distribution," Trans. of the ASME, Journal of Engineering for Industry, Vol. 94, August 1972, pp. 789-795.

27. Walker, M. J. and K. Oldham, "A General Theory for Force Balancing Using Counterweights," Mechanism and Machine Theory, Vol. 13, 1978, pp. 175-185.

28. Walker, M. J. and K. Oldham, "Extensions to the Theory of Balancing Frame Forces in Planar Linkages," Mechanism and Machine Theory, Vol. 14, 1979, pp. 201-207.

29. Wilf, H. S., Mathematics for the Physical Scientist, Dover, New York, 1962, p. 6.

BIOGRAPHICAL SKETCH

John L. Elliott was born February 17, 1946, at Woodbury, New Jersey. After moving to Florida in 1955, he graduated from Palm Beach High School in 1964. Starting his college work at the University of Florida in September, 1964, he received his Bachelor of Science degree in December, 1968. After a period of service in the army and working in industry, he returned to graduate school in September, 1974. He received his Master of Engineering in August, 1977.

I certify that I have read this study and that in my opinion it conforms to acceptable standards of scholarly presentation and is fully adequate, in scope and quality, as a dissertation for the degree of Doctor of Philosophy.

Delbert Tesar, Chairman
Professor of Mechanical Engineering

I certify that I have read this study and that in my opinion it conforms to acceptable standards of scholarly presentation and is fully adequate, in scope and quality, as a dissertation for the degree of Doctor of Philosophy.

George N. Sandor
Research Professor of Mechanical Engineering

I certify that I have read this study and that in my opinion it conforms to acceptable standards of scholarly presentation and is fully adequate, in scope and quality, as a dissertation for the degree of Doctor of Philosophy.

Calvin C. Oliver
Professor of Mechanical Engineering

I certify that I have read this study and that in my opinion it conforms to acceptable standards of scholarly presentation and is fully adequate, in scope and quality, as a dissertation for the degree of Doctor of Philosophy.

Ralph G. Selfridge
Professor of Computer and Information Sciences

This dissertation was submitted to the Graduate Faculty of the College of Engineering and to the Graduate Council, and was accepted as partial fulfillment of the requirements for the degree of Doctor of Philosophy.

June, 1980

Dean, College of Engineering

Dean, Graduate School