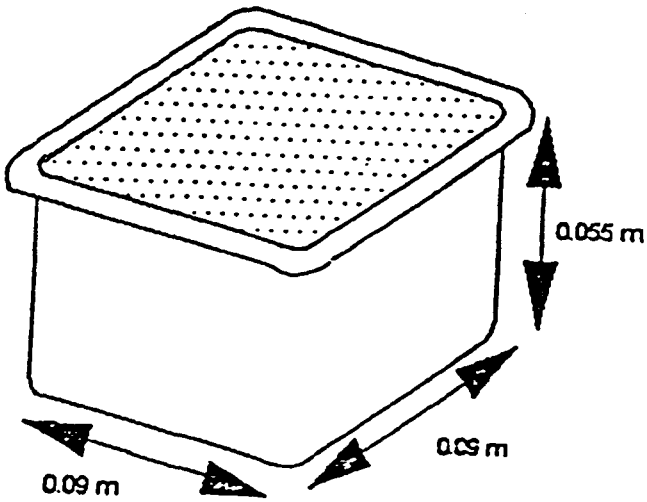


**Figure 4. Experimental 220 g package for fresh blueberries.**

pass through all parts of a carton. For this to happen, carton vents must remain open after stacking. Thus, venting patterns are important. Too little venting will restrict air flow; too much venting will weaken the carton.

The standard blueberry carton has a vent hole that looks like a channel with sloping sides cut in the upper fourth of two opposite sides of the carton (Figure 5). The opening represents 14% of the side of carton. When the air is forced through the vent hole, it passes through the gap between the top of the blueberry containers and the bottom of the carton immediately above, thus cooling the fruit from the top of the container.

Cooling research for strawberries [1], has established the relationship between cooling rate and air flow rate which should be adequate for blueberries. This study [1] indicates a large increase in cooling rate when the air flow rate was increased from $1.0 \times 10^{-3}$ to $2.1 \times 10^{-3}$ $m^3/(kg\ s)$ (1.0 to 2.0 $ft^3/min\ lb$) and a relatively small increase at higher flow rates.

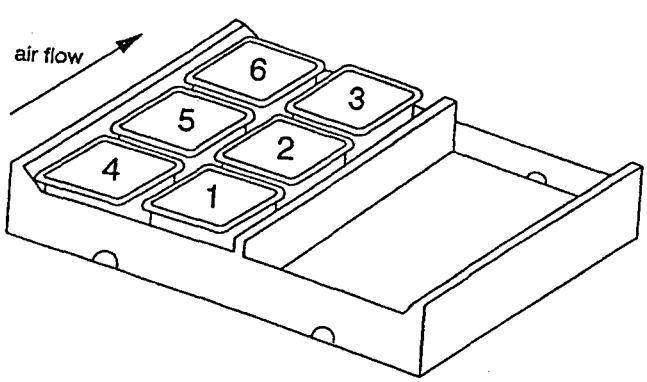


**Figure 5. Blueberry containers in tray carton.**

Cooling time was also shown to be a function of location of the fruit in the carton with respect to the entering air [6]. The more down-stream the location, the longer the cooling time Figure 5. Figure 6 shows the effect of fruit location on cooling time at various air flow rates for the traditional container while Figure 7 indicates the more uniform cooling of an experimental flat-top container with a perforated cover. The new container allowed blueberries to be cooled up to 20% faster than the traditional container.

When cooling pallets three cartons in depth, the last container in the inside carton can take approximately twice as long to reach 7/8 cooling as the first container in the outside carton. This is known as the bed effect in terms of the temperature gradient along the flow path at the time the first container achieved 7/8 cooling. A temperature gradient of 5

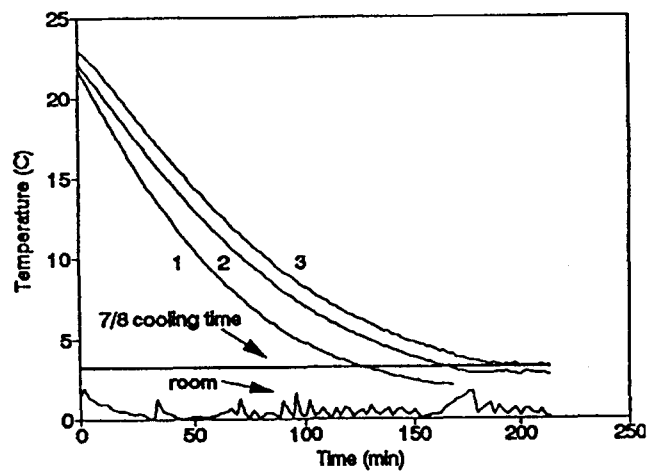


**Figure 6. Temperature versus time during precooling for standard pulp container [6].**

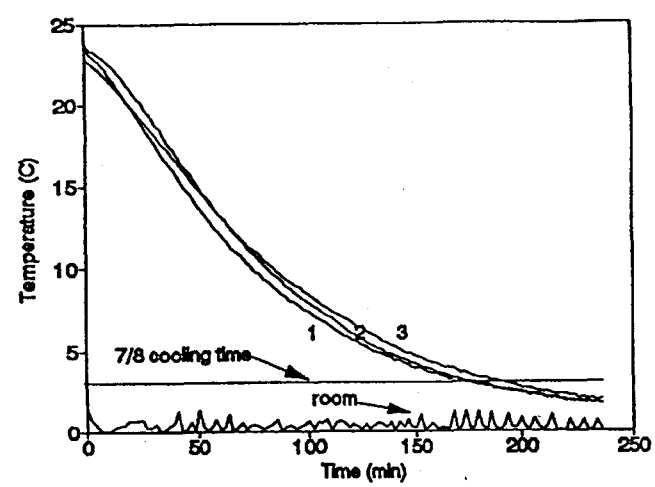


**Figure 7. Temperature versus time during precooling for experimental performated flat-top container [6].**