THE INSTITUTIONAL DIMENSION OF CHANGE IN INTERNATIONAL AGRICULTURAL RESEARCH

By

ADRIAN FAJARDO-CHRISTEN

A DISSERTATION PRESENTED TO THE GRADUATE SCHOOL
OF THE UNIVERSITY OF FLORIDA IN PARTIAL FULFILLMENT
OF THE REQUIREMENTS FOR THE DEGREE OF
DOCTOR OF PHILOSOPHY

UNIVERSITY OF FLORIDA

1993

ACKNOWLEDGMENTS

Is has taken me twenty years to fulfill a promise made to two outstanding professors, mentors and teachers of wisdom and knowledge, Dr. W.W. McPherson, in memoria, and Dr. Max R. Langham, and to my wife, Martha, with whom my married life started in graduate school (all but the dissertation), and to myself.

This work, this personal journey, could not have been possible if it were not for my friends and colleagues, Dr. Chris O. Andrew, supervisory chairman, and Dr. Clyde F. Kiker, whose friendship, understanding and guidance, helped me to do the research that I felt was important. To Drs. Gary D. Lynne, Robert D. Emerson, Terry L. McCoy, remaining members of my supervisory committee, I am also in debt. Appreciation is due to Dr. Lawrence W. Libby, Chair of the Food and Resource Economics Department, for believing that I was capable of such a late "come back," who, together with Dr. John R. Gordon, provided me with the needed financial support. To Mr. Carlos Jauregui, friend and schoolmate, for writing the Gauss program that greatly simplified the calculations, I extend many thanks.

Last but not least, this dissertation would not have been possible if were not for my wife Martha, whose love and

courage permitted me to make true what was becoming almost a dream and whose patience and understanding were tested many times. To my children Adrian, Diego and Nuria, who with their mother endured these two years of living separated as a family, all my gratitude.

TABLE OF CONTENTS

Abstract of Dissertation Presented to the Graduate School of the University of Florida in Partial Fulfillment of the Requirements for the Degree of Doctor of Philosophy

THE INSTITUTIONAL DIMENSION OF CHANGE IN INTERNATIONAL AGRICULTURAL RESEARCH

By

ADRIAN FAJARDO-CHRISTEN

December 1993

Chairman: Dr. Chris O. Andrew
Major Department: Food and Resource Economics

The institutional dimension of change in international agricultural research is introduced through the notion of a core and a periphery of causal concepts. The core is represented by 24 shared causal concepts in an institutional cognitive pattern. The core of causal concepts consist of those considered more valuable, meaningful and useful by the decision-making participants in the agricultural improvement programs as they searched for solutions to the food deficit problem and explored opportunities for increasing food production.

Pattern behavior analysis of the institutional cognitive pattern is performed using a neural network algorithm. The neural network systems paradigm provides an effective and efficient analytical tool to observe, through a dynamic activation and deactivation of the causal concepts, the

consequences of 1) the continuous growth in population and 2) the presence or absence of government investments in agricultural improvement programs on a country's food production deficit. The institutional dimension of change in international agricultural research depends, in this analysis, on 1) the dynamic movement of causal concepts between the structural core of the institutional cognitive pattern and its periphery, 2) the narrowing or expansion of the defined researchable problem and opportunity domain, and 3) the merging of two or more institutional cognitive patterns from different domains. The present challenge confronted by the international agricultural research centers of the Consultative Group on International Agricultural Research system corresponds to the process of merging its present institutional cognitive pattern with the core of causal concepts emerging from the environmental problem and opportunity domain. Two institutional settings must converge to avoid human starvation, presently and for future generations, through sustainable resource use.

CHAPTER 1
THE SETTING FOR INTERNATIONAL AGRICULTURAL RESEARCH

Introduction

The search for a reliable source of food by influencing nature is as old as humanity's first attempts to domesticate plants and animals. The accomplishments of our early ancestors in this search were far reaching: no plant or animal of major importance has been added to the ones domesticated by prehistoric people (C. O. Sauer, 1952).

This introduction is a brief historical overview of the events to international agricultural research and a preamble to an abridged history of the development, accomplishments and evolution of the challenges to international agricultural research. The story focus is especially on the Consultative Group on International Agricultural Research (CGIAR) system, the international agricultural research centers (IARCs) and their linkages to the national agricultural research systems (NARS), from commodity research to the present concerns for natural resources. The problem setting is presented from an institutional perspective, as an important dimension for the analysis of the political and economic consequences resulting

from the changes in the CGIAR system's mission and in the IARCs' research focus and linkages.

From Search and Exchange

Columbus' recent voyage, five hundred years ago, initiated an encounter of cultures and a major transfer of plants and animals between continents, not known in prior history. The territorial expansion that followed gave rise to an agriculture for export in the colonies and initiated research in tropical agriculture for those crops in demand by the European metropolis. In the 18th and 19th centuries government supported botanical gardens were established in Europe and the colonies. These gardens acted as clearinghouses for plants and as places for selection and crossbreeding (G. B. Masefield, 1950). A limited agricultural research activity across countries followed including plant collecting expeditions, learning about diseases and pests attacking colonial crops and development of crop alternatives[1]. Not until 1941 were the seeds sown in Mexico for a program of scientific assistance and cooperation in food production agricultural research in a less developed country with the participation of resident scientists from a developed country (K. A. Dahlberg, 1979). Such organized international

---

[1] For a brief history of the development of modern agricultural research, especially the U.S. and Japanese experiences, see Y. Hayami and V. W. Ruttan (1985).

research remains a young scientific activity with inspiring early successes.

During the first half of the twentieth century, and well into the 1960s, agricultural research in many of the developing countries established its initial credentials in several export crops and major staple crops. During the most recent two decades a marked decline in the quantity and quality of research in developing countries has occurred (P. G. Pardey and J. Roseboom, 1989). Changes in development strategies and priorities, lack of long-term commitments and inadequate research resources (funds, trained researchers, equipment and facilities) have contributed to this decline in national agricultural research systems.

Today, for many countries in the tropics, an important component of development is to obtain and sustain productivity gains in food production by farmers. This component requires a solid, comprehensive and interdisciplinary research base to confront a continuous loss and degradation of arable land, an increasing loss of genetic diversity and, in almost 70 percent of the developing countries, a population growth rate that exceeds the present gains in food production (A. S. Moffat, 1992).

To an International Commodity Approach

Deriving from the successful replication in other countries of the earlier Mexican agricultural research experience, a network of international agricultural research

centers, initiated in the 1960s, is dedicated to assisting with a broader research need. Conceived to extend world wide the benefits of the green revolution, the IARCs' record over three decades has been impressive indeed for a limited group of commodities. The measurement of this record still is primarily based on the spread of semi-dwarf varieties of wheat and rice, the high yielding varieties (HYV). Half of the area producing wheat and rice in developing countries is now planted with HYV. Together the total impact of these grains on food production in the developing world amounts to an additional 50 million tons of food per year and "enough to meet the typical cereal needs of about half a billion people." (W. C. Baum, 1986, p. 285).[2]

In the initial impetus of the first accomplishments, the Consultative Group on International Agricultural Research was created in 1971 under the cosponsorship of the World Bank, FAO and UNDP, to support a network of international agricultural research centers. The International Rice Research Institute (IRRI) in the Philippines, the Centro Internacional de Mejoramiento de Maiz y Trigo (CIMMYT, the International Maize and Wheat Improvement Center) in Mexico, the International

---

[2] Under experimental conditions wheat's HYV raised the potential yield to 9 tons per hectare, more than twice that of traditional varieties, and under farmer's field conditions to an increased yield of half a metric ton per hectare. HYV of rice increased production, depending on growing conditions, between 10 and 100 percent with an average yield in farmers' fields of 400 kilograms per hectare of additional food (edible grain after discounting for the weight of the hull).

Institute of Tropical Agriculture (IITA) in Nigeria, and the Centro Internacional de Agricultura Tropical (CIAT, the International Center for Tropical Agriculture) in Colombia; were the first four international agricultural research centers, established in the previous decade by the Rockefeller and Ford Foundations, that became part of the Consultative Group. In the remaining years of the 1970s nine more international agricultural research centers were created. Since 1990 the 13 centers network under the umbrella of the CGIAR system has expanded to 18 centers.[3]

During the period when the gains from high yielding varieties were being realized, the agendas and missions of the international agricultural research centers were easily recognized. The original aim of the system was to utilize the successful commodity research approach of the green revolution and extend it to the improvement of other crops in an international scientific effort to help resolve the need to grow more food in developing countries. A first inkling of built-in limitations in this approach for other crops came from the lack of comparable results in the research on maize, wheat's sister research program at the center in Mexico (T. W. Schultz, 1971). The maize program, starting parallel with the research on wheat, has released almost as many varieties.

---

[3] The CGIAR is an international group of representatives of donors (countries, development agencies, international and regional development banks and private foundations) and representatives from non-donor developing countries.

However, the maize area cultivated with the new varieties, while significant, remains small in relation to the total area in maize production in developing countries as compared to a similar ratio for either of the areas in production with wheat or rice HYV (W. C. Baum, 1986).

Taking Stock and Changing the Mission

In carrying out their mandate, the scientific and administrative staffs of these international research institutions, development agencies, and governments address, both implicitly and explicitly, the needs of farmers and consumers in developing countries. The initial concentration of research on food crops, produced and consumed in the developing world, tackled the problems threatening, at that time, the food security of developing countries. First priority was given to increased food production. No explicit target was specified in terms of who in the developing world would benefit more from the results of the research.

Later, as it became evident that the adoption of the new varieties was specific to well endowed agricultural areas, the need was felt for a research effort directed to the food production problems of resource-poor areas and on the crops grown in these areas. Poor consumers, together with poor farmers, were made explicitly the final beneficiaries of the research effort.

Another group of spill-over beneficiaries from international agricultural research, not named directly as

clients, have been the developed countries (ACIAR, 1989). Nearly 60 percent of the wheat producing area in the USA is planted with semi-dwarf HYV originated from the genetic material of the wheat germplasm collection in Mexico. Close to 25 percent of the USA rice producing area is in semi-dwarf varieties from which two thirds come from the rice germplasm collection in the Philippines. Genetic material from the bean collection in Colombia is used in the USA for virus resistance. Potato germplasm from Peru has proven useful in golden nematode resistant varieties produced in New York State. Almost half of the wheat producing area in Australia is planted to varieties derived from the ones originating with the research of the international agricultural research system of the CGIAR. The Agriculture and Fisheries Department of the Australian State of New South Wales[4] estimates on the average a 7 percent increase in yield for the wheat HYV-based varieties sown in Australia as compared to the other leading varieties. In a ten-year period from the mid-1970s to the mid-1980s the Department estimated a total value for the increased production at approximately US$ 650 million.

The first strategy of targeting research on increasing production by those crops (wheat, maize and rice) with the

---

[4] The report "Impact of Wheat Varieties from CYMMIT on Australian Wheat Productivity" prepared by the Agriculture and Fisheries Department of the Australian State of New Wales (ACIAR, 1989), to the best of present knowledge, gives the only available analysis on benefits derived by a developed wheat-exporting country.

greatest potential for increasing world food production was followed with an agroecological approach. Regional centers dedicated to the crops and farming systems in the lowland tropics of South America (CIAT) and the humid tropics of Africa (IITA) were created. Yet, in the mid 1970s this regional agroecological approach was to lose its importance. The commodity approach was to be given continuous adherence because "agroecological research took too long to show results" (J. Walsh, 1991, p. 10).

By the mid-1980s the CGIAR system once again gave importance to a broader research approach:

> Through international agricultural research and related activities to contribute to increasing sustainable food production in developing countries in such a way that the nutritional level and general economic well-being of low-income people are improved. (TAC, 1988, p. 25)

The CGIAR evolving mission statement for the 1990s is as follows:

> Through international research and related activities, and in partnership with national research systems, to contribute to sustainable improvements in the productivity of agriculture, forestry and fisheries in developing countries in ways that enhance nutrition and well-being, especially of low-income people. (TAC, 1991, p. 10)

This new mission statement has broadened the focus and goals of the system. In addition to the major food crops, which now include banana and plantain, agroforestry and fisheries are part of the international research effort together with irrigation management. Research results are now

viewed as components of a natural resource management process and are to be integrated into a sustainable production system.

The early 1990s represent a period of unease, based on the present mission statement of the CGIAR system, as centers seek to define a new agenda with which to serve the needs of people. Their goal is to embark on research to satisfy human needs without degrading the natural resource base. Research programs, dissemination of information, provision of training and the germplasm conservation functions, basic to the centers, are to be directed toward effectively managing and conserving resources and toward improving productivity in a sustainable production system. Also, the centers, much like national agricultural research systems, feel increasing pressure from their sources of funding to be more sensitive to environmental issues. The old dilemma between productivity and natural resource research has been drawn now into the raison d'etre of the IARCs.

An emerging global concern is for the development of agricultural strategies that would restrain the loss of land and other natural resources while increasing crop diversity. The goal is to focus agricultural research on a global scale for technologies, crops and farming practices that can increase and sustain productivity, conserve energy, water and soil, preserve biodiversity and minimize negative effects on the environment.

The IARCs feel pressure to work from an agenda which better serves the needs of poor farmers relative to those with greater resource endowments. The shift in focus from homogeneous, well endowed and controlled environments to the needs of farmers in resource poor and diverse environments strikes at the core of the research resource allocation process in the centers. The commodity approach of the green revolution illustrated a quicker payoff, in terms of increased production, for research focused on productive land with available water, infrastructure and accessibility to purchased inputs. No equivalent success story yet prevails for research that tries to help resource poor farmers. How to allocate research resources to these two types of agriculture is a challenge that centers are increasingly now facing.

The NARS Connection

The expectations for international agricultural research remain high in the face of intensified research resource constraints and especially so for the national agricultural research systems (NARS) from whom the centers must ultimately depend for location specific research. To reach their final clients the international agricultural research centers must work with and through the NARS of the developing countries. In the mission statement for the 1990s the CGIAR system makes explicit the partnership nature of its relationships with the NARs.

The linkage between the NARS and the IARCs, as specialized institutes of the CGIAR, was meant to be complementary. In the commodity applied research mode the centers viewed themselves as intermediaries between the basic and strategic research done mostly in developed countries and the location-specific and adaptation research to be done by the NARS in developing countries. This approach translated into an interchange of varieties. The NARS were to do the testing under local conditions and, through the use of extension services, make the tested varieties available to farmers together with whatever other components the centers' new technology require to be successful. It was conceived that once the desired increases in food production were accomplished the applied research, including generation of technologies, would be the responsibility of the NARS.

Extending Through an International Research Network

In the late 1970s the approach to research assistance continued to be top-down from the IARCs. This one directional research flow brought two major concerns from the centers' point of view: the uneven capability of the NARS to absorb, test, and disseminate the technologies generated by the centers; and the concern for what portion of their research resources should be committed to support and strengthen national research. The CGIAR, in response to these concerns, and in a departure from its research-based centers concept, created in 1979 the International Service for National

Agricultural Research (ISNAR). As a technical assistance center, ISNAR's sole purpose is to strengthen national research programs and "to insulate the centers against excessive pressures" (W. C. Baum, 1986, p. 247).

The linkage between NARS and IARCs has evolved into various collaborative networks. A goal of the approach is to establish the centers and the NARS as equal partners in the implementation of a specific research agenda. Strengthening of national research systems continues to be crucial for successful networks. Since the mid-1980s it has been expected that NARS would increasingly assume a lead role in the generation of technology and "with the strengthening of national systems, the centers should move their research focus more upstream"[5] (TAC, 1988 p. 112).

Transition into the Next Century

Now, at the start of the 1990s, the CGIAR emphasis on food production has shifted from food self-sufficiency to achieving food-reliance. This opens the international agricultural research agenda to income-generating nonfood commodities and in turn to research on competitive advantage in regional and world trade for agricultural, forestry and fisheries products from developing countries as a means to satisfying the basic food and nutritional needs of low-income

---

[5] "Upstream" refers to research of a more fundamental nature as support to more applied or adaptive, "downstream", research.

people (TAC, 1991). The above, together with the priority given to a sustainable and stable food supply, accompanied by non-degrading and effective resource management, creates a new scenario where the complementary and partnership linkages between NARS and centers need definition.

At present, no comprehensive CGIAR policy statement exists on the NARS and IARCs' relationships. Questions as to the extent of direct center involvement in strengthening national research systems linger. New questions have arisen, in response to the need for location specific research for diverse agroecological settings, and "the extent to which international research funded by the CGIAR might be undertaken by the national systems themselves rather than by the centers" (TAC, 1991, p. 184).

The changing role of partners in the global agricultural research system is going to be influenced by the increasing involvement of the private sector in agricultural research in developing and developed countries. In the past, primary responsibility for agricultural research rested in publicly funded research organizations. At present, nongovernmental organizations (NGOs) in developing countries, thought to be more agile than governmental ones, more cost effective and independent of political influences, are considered to be suitable vehicles for channelling funds from international donors to agricultural and environmental research. Also, the appearance of proprietary rights in biotechnology research

brings forward the issue of the free flow of scientific information and genetic materials, both from and to developing countries. This free flow has been a vital characteristic of the international agricultural research system. The preservation of genetic variability for future research support, an important mission of the centers, would have to be considered now vis-a-vis future accessibility of genetic materials as natural and scientific resources that embody world knowledge.

The focus of this research in these transitions is on the ideas, values and concepts shaping and influencing the research agenda in the international agricultural research system. It is profoundly influenced by the search for new technologies and ways to organize research. Attention will be given to how the international agricultural research organizations are perceived to be adapting to the challenge of change, the effects of change on the setting of priorities, allocation of research resources and relations to the NARS.

The Problem Setting and Research Plan

The need to globally maintain and increase the available options of food sources[6] is in direct response to the growth

---

[6] The concept of maintaining and increasing the available sources of food is broader than the one, more common in the literature, of maintaining and increasing productivity gains. It attempts to capture all options available to people to feed themselves beyond the use of grains and other major commercial crops and livestock.

in population. How effectively and efficiently these food sources are managed is a major determinant of how many people can be fed. Global agricultural research plays a key role in the endeavor to feed the world's expanding population.

Agricultural research, and especially international agricultural research, needs a long-term time frame for its results to be productive at the farm level. To plan within this longer horizon account must be taken of population growth projections, the stock and flow of available resources, the process of using resources and the environmental consequences of resource use in producing the food demanded.

A Growing Population in Need of More Food

In 1950 world population amounted to 2.5 billion people. In 1990, forty years later, it more than doubled to 5.3 billion. Projections made in 1988 by the United Nations (UN) modestly placed the figure at 5.8 billion in 2010. UN's future projections are linked to the existing birthrates in developing countries, where it is estimated that more than 75% of world population presently lives. A decrease in number of children per mother of 13%, from 3.8 to 3.3, by the year 2000, yields an estimate of 6.3 billion people. By the year 2020 the estimate would be 8.5 billion, followed by an estimate of 10 billion by the year 2050 and 11.6 billion in the year 2150. If birthrate reduction is not reached by the year 2010 the estimate is upgraded to 12.5 billion by the year 2150 (United Nations, 1992).

The world's food supply has been increasing in parallel with the growth in population due, in great part, to technological advances, adoption of high-input agricultural production farming and, in some countries, expansion of cultivated land at the expense of forests. Since mid-century overall trends in absolute and in per capita agricultural production have been upwards (UNEP, 1991). During the same period, grain harvested in the world increased 2.6 times (L. R. Brown, 1990). Such unparalleled growth in food output has a direct relationship to the high response of HYV to chemical fertilizers. To support soil fertility, world fertilizer use increased in the past 20 years by 250 percent in absolute terms, with developing countries consuming more tons of fertilizer in total than the developed countries. However, since 1980 the broad category statistics compiled by the FAO indicate that "the rate of increase of agricultural production has tended to decrease in the developed countries, but has continued to increase dramatically in developing countries". There is a caveat. The statistics "mask the stagnation of per capita food supplies in Latin America and the decline of per capita food supplies in Africa" (UNEP, 1991, p. 141).

After impressive successes agricultural research is now entering, no doubt, paradoxical times. In a number of countries the carrying capacity of the land is approaching biophysical maximum limits and in many the demand for food grows faster than production. It has been estimated that in

the last 20 years world agriculture lost 500 million tons of topsoil. On a broader scale, 200 million hectares of trees were lost and the disappearance of plant and animal species reached the tens of thousands (L. R. Brown, 1990; UNEP, 1991). Regardless of these losses the UN estimates that the population projected for the year 2010 will need 5.9 million square kilometers of land for competing uses including: agriculture, roads and urbanization.

If the herculean task of feeding close to 50 percent more people in the world in the next 30 years with less arable land available were not enough of a challenge for international agricultural research, initial concerns about production limits of the HYV are beginning to materialize (R. S. Anderson et al., 1991). There is now growing evidence of diminishing returns from intensive production with HYV. After 30 years of increasing trends, yields in potato fields in Mexico and in rice paddies in Asia are becoming stagnant or have decreased in recent years (A. S. Moffat, 1992). In the well endowed irrigated areas of Asia, biological limits are beginning to constrain rice's further development and for "some areas even the current high yields may not be sustainable" (TAC, 1991, p. 195). Moreover, in a study of rice productivity growth in the intensively cultivated areas across Asia, "the data suggests (sic) that the reason for the decline is that the rate of growth of yield of improved rice varieties is less than the rate of degradation of the paddy environment from such things

as increased pressure from pests, depletion of soil nutrients, and changes in soil chemistry caused by intensive cropping" (J. Walsh, 1991, p. 25).

Environmental Concerns and the Needs of the Poor

In retrospect the high input technologies of the green revolution and its widespread application were an emergency response to the incoming food crisis of the 1950s and 1960s. Yet present and future conditions challenge global agricultural research as never before. Although meant to solve the food crisis only temporarily (N. E. Borlaug, 1990), the HYVs with their intensive use of fertilizers, pesticides and irrigation have also exacted their toll on nature. Technologies to increase the production of food are challenged by a world scenario where more must be produced with less arable land and where inputs, such as greater fertilizer and pesticide use, are becoming in many areas of intensive agriculture, a major water pollutant and a health risk, via the run-off from agricultural land. Any response to this complex scenario demands a thorough understanding of the resource base on which agriculture depends.

The poor, wherever they live, spend a much higher proportion of their incomes on food than do higher income people. As a consequence, productivity gains in food production benefit poor consumers more relative to consumers with higher incomes. This phenomenon is less true for low income producers mainly because new technologies have often

required unique adjustments. Farmers who are poor and with limited access to knowledge experience relatively greater difficulty in adjusting to the requirements of advanced technologies than do producers with greater access to human and physical capital for investment in production.

A necessary condition for farmers to benefit from the green revolution is access to land with available water sources, either through reliable rainfall patterns or through irrigation. Among the sufficient conditions is availability of chemical fertilizers and reliable methods of pest and disease control, usually also chemical. Therefore, the HYV requires a stable and homogeneous agricultural setting for a wide applicability across a range of broadly uniform conditions and an access to a source of energy favored by declining prices. These conditions are almost universally unavailable for the majority of small, limited resource farmers under marginal resource situations.

The Problem

International research has been continuously challenged to address the productivity problems of a resource poor agriculture characterized by complex systems, low and unstable production, high uncertainty, marginal areas, fragile soils, severely constrained farm resources and lack of infrastructure for input supply and product marketing. Also, at present resource conservation concerns demand that agricultural research confront the task of developing new knowledge to

increase productivity that will be compatible with these less well endowed environments and that will be sustained for the long term.

The Consultative Group on International Agricultural Research, one of the most visible and successful organized efforts in international agricultural research, is undergoing a process of profound change in research focus, direction and method. This change has important implications for the international agricultural research community, the developing countries' national agricultural research systems, and for the CGIAR's international agricultural research centers - - the core of organizations to implement any new research priorities. The essence of the direction of change in the CGIAR's research concerns is captured succinctly by its Secretariat in the caption: "From famine prevention to sustainable development" (A. von der Osten-Sacken, 1992, p. 26).

On the other hand, in what seems a companion trend toward a point of encounter for creating common ground for research, the international conservation community has also undergone a shift of focus from the "boots, guns and fences" approach in order "to protect areas set aside from human encroachment" to recognizing, and explicitly addressing, the satisfaction of the needs of the rural poor through sustainable development, a necessary condition for a successful natural resources conservation effort (M. Schmink, 1993, p. 2).

Research Proposition and Objectives

A basic proposition of this dissertation is that the ongoing process of change in the focus of international agricultural research, especially in the CGIAR, is fundamentally driven by a change in the values and beliefs of the members of the societies in the donor community. The new vision contrasts with a still stronger vital need for the societies of developing countries to rapidly increase food production to feed their growing populations.

The operational difficulties resulting from this dilemma are reflected in the continuous ongoing debate about how best to accomplish increases in productivity growth in agricultural production without degrading the natural resource base on which this production depends.[7] It appears as a more complex and much larger challenge than the one previously faced when the international agricultural research centers, especially the first IARCs, focused specifically in the 1960s on the rapid increase of food production to successfully arrest the specter of famine in the Third World.

The emerging organizations and technologies to face this new challenge, and the economic consequences of this major shift in international agricultural research are yet to be fathomed. The purpose of this dissertation is to provide an

---

[7] Witness to this debate is a recent workshop on "Reconciling Sustainability with Productivity Growth" co-sponsored by the University of Florida and Cornell University, May 19-21, 1993.

approach to investigate the institutional processes and influences in international agricultural research. A specific goal is to articulate and specify the intellectual, analytical and applied problems involved in studying institutional change in a global agricultural research arena.

The research objectives are several fold and sequentially addressed in the chapters that follow. The analysis of the institutional dimension of change in international agricultural research needs the development of an institutional conceptual framework, that, together with the identification of its analytical components, can be linked and bound to the agricultural research problems and opportunities confronted by the national and international agricultural research systems. This task is undertaken in Chapter 2 via a theoretical, conceptual and methodological discussion. Next, Chapter 3 aims at specifying the applicable methodology and the selection of an analytical procedure for analysis of the institutional dimension of change in international agricultural research. The chapter delves into the construction process and the matrix specification of an institutional cognitive pattern as a viable heuristic device. It also identifies an algorithm for the dynamic analysis of the pattern's behavior, discusses the available sources of data and the procedures for deriving such a pattern from an identified data source.

The empirical analysis of institutional change in international agricultural research starts with the international agricultural research that originated in the Mexican agricultural improvement programs, developed and sponsored by The Rockefeller Foundation and the Mexican government. In this context, Chapter 4 sets out to explore analytically the Mexican and, thereby, similar Latin American experiences in the initial and blooming years of the Green Revolution. Due to time and available data constraints, the analysis covers the first twenty years, from the early 1940s through the 1960s. Nevertheless, the analysis of this first period establishes the conceptual and analytical groundwork for the study of the remaining periods, from the early 1970s through the 1980s and, presently, the period emerging in the early 1990s. Finally, Chapter 5 presents the conclusions of the analysis, the recommendations for future research and for exploration of the developed institutional analytical perspective as a strategic planning tool and as a viable vehicle to guide and facilitate institutional development in international and national agricultural research systems.

CHAPTER 2
INSTITUTIONS: SCOPE AND DEFINITION

> The political institutions of the English colonies have been more favorable to the improvement and cultivation of this land than those of any of the other three nations.
>
> (Adam Smith, 1937, p. 538-39)

> Columbus would never have thought to set sail westward had he not had an image of the round world, and a high value in his system for spices. Similarly, the agricultural revolution itself marks the beginning of a period in which change became a welcome element in society instead of a feared and discordant one. The idea of progress always precedes development.
>
> (K. E. Boulding, 1977, p. 123)

This chapter is theoretical and methodological in its attempt to clarify the concept of institutions and identify its analytical components for the purpose of analyzing the institutional dimension of change in international agricultural research. It will explore, via the modern philosophical foundations of institutions, the meaning of institutions and their integration into the process of decision-making in relation to international agricultural research organizations and the users of their technologies. This approach, due in part to the characteristics of the decision making process in the international agricultural research system under study and to the level of analysis

involved, will not be specifically contrasted to the way in which institutions are dealt with in main stream or neoclassical economic analysis. There is abundant literature on the subject of differences between mainstream economics and institutional economics.[1]

Nonetheless, this chapter reintroduces a fundamental proposition. It is the premise that institutions and their ensuing rules and norms of behavior were an essential component of the economic thinking of the early philosophers who were influential in shaping the foundations of economic concepts (i.e., Smith, Locke, Hume).[2] Hence, it is the initial intention to understand institutions at the conceptual level of analysis, and as they link with and embody activities of economic consequence, such as international agricultural research. A second intention is to shift into a lower level of abstraction for the purpose of dealing with how institutions represent the socio-economic problem and opportunity domain for action, thus, influencing, limiting and empowering researchers, research administrators, donors and governments in the process of making research decisions. A further premise

---

[1] For challenging perspectives see K. E. Boulding (1992); D. C. North (1990); G. M. Hodgson (1988); D. W. Bromley (1989), especially chapter two on institutional change: the conventional views; and recently, for a "greatly simplified" table summary of basic differences, see D. Paarlberg (1993, p. 824).

[2] For a recent work on the role of social institutions in Adam Smith's design of the "Decent Society" see J. Z. Muller (1993).

is that institutions, what they are and what they represent, determine or encompass the way in which individuals and organizations participate in economic processes as they unfold in everyday life.

Necessary operational objectives of the chapter are: to specify the conceptual scope at which the institutional analysis will be pursued relative to the origins and present institutional changes affecting the system of international agricultural research centers; and to provide a conceptual framework for the analytical approach to be used.

Institution: Meaning and Context

The word "institution" in its accepted conventional usages is ambiguous. It usually has two meanings: "a significant practice, relationship, or organization in a society or culture" and "an established organization or corporation (as a college or university) esp. of a public character" (Webster's Ninth New Collegiate Dictionary, 1990). Moreover, in an ironic twist, it is also synonymous with the word "asylum." The first of the two meanings is the starting point for the development of the concept of institutions for purposes of this research. It is also important to differentiate between institutions and organizations, or, using an analogy, to differentiate between the "rules of the game" and the structure and practice of the "teams" and "players."

Institutional Perspectives from Market and Grant Economies

The institutional dimension of change in international agricultural research, as a subject of study, seems to fall outside the ongoing scholarly conversation that characterizes institutions and institutional change in a market or exchange context. One characterization, through a competitive analytical approach, sees institutions, and their ascribed transaction costs, as either the problem or the solution to organizational efficiency in the market (O. E. Williamson, 1985). A recent one, examines institutions as human constructed, informal and formal, constraints, creating order and reducing uncertainty in exchange, that, "together with the standard constraints of economics ... define the choice set and therefore determine transaction and production costs and hence the profitability and feasibility of engaging in economic activity;" and, thus, in a political and economic institutional evolutionary framework, the question becomes "what makes it necessary to constrain human interaction with institutions?" to create a competitive market environment (D. North, 1991, p. 97).

International agricultural research, through the technologies it generated, has been a key contributor, especially in the period under study, to a dramatic upward shift in the production function of basic food crops in less developed countries. Notwithstanding the impact of these increases in food production via the market, international

agricultural research still is not characteristically a market or exchange activity. The original agricultural improvement programs, sponsored by The Rockfeller foundation and the Mexican and other Latin American governments in the past, and the international agricultural research centers (the IARCs), as important components of the international agricultural research system in the present, are not profit driven and the results of the IARCs' research efforts are freely distributed through the National Agricultural Research Systems (NARS) to farmers throughout the world. While the IARCs contribute to increasing agricultural productivity and increasing profitability for market oriented farmers, they are not participants in a market exchange of the technologies they generate. In other words, using K. Boulding's taxonomy, they belong to a "grants economy" (K. Boulding, 1992). They receive funds and provide technologies in a sequence of one-way transfers: funds from donors to the IARCs and technologies from the IARCs to the NARS and on to farmers. No market exchange of technologies takes place in this process. It must be noted that the process does not overrule reciprocity. The IARCs do the kind of research the donors expect them to do, the countries and their NARS do what is needed to adapt the research such that farmers might adopt IARC technologies.

Therefore, given their market focus and the resulting emphasis on exchange as opposed to grants (one-way transfers), the above and similar market institutional perspectives would

seemingly exclude the institutional dimension of change in international agricultural research as a subject matter for direct analysis. A grants economy does however present a challenging landscape for the analytical specification of institutions and institutional change. It creates a need for a more basic and primal perspective concerning the institutional dimension, one from which the other institutional perspectives could be derived. In this context, expanding the previous sports analogy, the focus broadens to explore, what underlies the rules of the game, what causes the existence of the game and why it is being played.

Searching for a Concept and Establishing a Definition

Early researchers on institutional economics attempted to capture the essence of the nature of institutions. Two renowned pioneers, T. Veblen and J. R. Commons, gave the following definitions of institutions, respectively: "prevalent habits of thought with respect to particular relations and particular functions of the individual and of the community" (T. Veblen, 1943, p. 190) and "collective action in control, liberation, and expansion of individual action." (J. R. Commons, 1934, p. 902). Commons' approach to the concept of institutions has guided institutional economics towards the analysis of rules, norms and/or entitlements, especially on the issues of property rights (A. A. Schmid, 1987). This is understandable given that rules and laws are

more likely to be identifiable and possess a direct bearing on individual day-to-day actions.

However, the above definitions complement each other. Commons' definition stressed the normative aspect of institutions, the "rules of the game", and Veblen's the cognitive process embedded in institutions. The cognitive element of institutions, although the most difficult to frame analytically, is nevertheless the primal one from where the rules are later derived. From the long-term perspective of agricultural research, more so in its internationalization, the cognitive nature of the institutional setting, in which research is conceived and to which it responds, is important for a more thorough understanding of research's role in agricultural development. Thus, the need prevails for an integrated definition of institutions that identifies their basic components and their relationships.

To study institutions is to search for the broader patterns in the way society perceives its needs and aspirations and agrees among its members about how to meet these needs and aspirations. Therefore, institutions are, first, the preemptory materialization of a shared image[3] and vision of the world and the society we live in. This perceptual process, cognitive in nature, brings together values, beliefs, desires, needs, knowledge and a sense of what

---

[3] For a stimulating and creative treatment of the importance of the image for individuals, communities and societies see K. E. Boulding (1977).

is possible, into shared causal relationships of ideas and concepts. Second, institutions, embodying also the ensuing agreement on how the needs and aspirations should be addressed, consist of a system of norms or a complex of normative systems as principles for action, establishment of rights, other entitlements, rules and behavioral accords. Institutions, thus, are essential for the interaction of individuals and organizations in a society.

In the above sense, sets of institutions "norm" the actions of individuals and organizations in a variety of activities. Of interest are those activities and actions with economic consequence, in this case, international agricultural research.

Institutions and Organizations

An organization represents a specific set of capabilities allowing it to function in a given institutional environment that sanctions the use it makes of society's resources for the purpose of satisfying the aspirations and needs of its members. Organizations, therefore, have their reason to be, are defined by and derive their legitimacy from the institutional setting from which they emerged. This definition of organizations encompasses also those that are meant to monitor or enforce the institutional normative component as deemed necessary by society's members i.e. seed control boards or agencies, environmental regulators.

In an institutional setting, organizations are means through which the members of a society operationalize and accomplish the materialization of their aspirations and the satisfaction of their needs, and, over time, act to modify the institutional setting when it prevents accomplishment of aspirations and satisfaction of needs.

Institutional Analysis: Components

Hence, an institutional environment possesses two intermeshed but analytically separable and sequential dimensions. One is cognitive: the perception of causal concepts as a problem and opportunity domain in the satisfaction of society's aspirations and needs. The other, deriving from the first, is normative in character: that is, how these aspirations and needs should be addressed. This analytical separation establishes a precedence for the cognitive nature of institutions, as the primal source of change, and from where norms and rules are subsequently derived. In this sense, international agricultural research is conceived in response to a socio-physical problem and opportunity domain specified in terms of causal concepts and relations.[4] Under the above analytical sequence, complex issues such as world food security, for example, represent a problem and opportunity domain, rooted in human needs and in the desire to have adequate food, available and accessible,

---

[4] For a vivid political analysis of science, agriculture and research see L. Busch and W. Lacy (1983).

for the sustenance and betterment of human life. From this perception of needs and aspirations, a set of norms and rules, or judgements, are derived that formulate rights, obligations, requirements and duties about defense against hunger and malnutrition.

Causality and Boundaries

The institutional cognitive process selectively captures a causal situation from a more complex external world. Stated differently, people are allowed to describe, interact with and cope with their social and physical environment in terms identified as a specific problem and opportunity domain. From this perspective people in the process select and validate notions or ideas, referred to here as concepts, and assert causal relationships among the concepts, referred to here as causal concepts.[5] The process, as a dynamic reality, is sustained by shared practical experiences along with knowledge of the given domain and of accumulated evidence about the possibility that such causal relations will occur. This causal structure, following Castaneda's characterization of practical experience, bears the results of past decisions, their actions and consequences; of perceived duties and their conflicts, and of exerted influences in the social and physical environment (H. Castaneda, 1975).

---

[5] For a clarifying discussion on the origins of the notions of cause and effect see, especially the chapter on Science: A Brief Evolutionary Analysis, N. Georgescu-Roegen (1971).

Fundamental analytical questions are introduced by this conceptualization. In the espoused analytical perspective, boundaries of the problem and opportunity domain are set by the perceived and selected concepts, as a representation of society's aspirations, needs and knowledge, and they are set by causal relationships between the concepts (the problem and opportunity domain). Given the impossible task of conceptualizing the totality of a society's representation, analytical or otherwise, responses to two basic sets of questions help keep the task manageable. First, "who are the participants defining the boundaries of the problem and opportunity domain whose perceptions of concepts and causal assertions are to be represented?" Second, inevitably inherent in the first, "whose aspirations and needs, and which ones, from the large spectrum of members and characteristics of a society are perceived and selected by these participants?" In other words, "Whose aspirations and needs will be addressed?" "Whose values will dominate?" "Whose priorities will prevail?"

The Perception Process

The nature of the perception process, the concepts and the causal assertions can be clarified. Not only is it for analytical convenience that a selection of concepts is perceived; it is in the nature of individuals to select from the complex perceptual spectrum of the outside world those concepts, notions or ideas that have meaning in their encounter with a specific problem and opportunity domain.

Thus, it remains as a task for the present analysis of international agricultural research to identify and account for those perceived and selected concepts that can prove useful in understanding the problem and opportunity domain now confronting the IARCs.

The nature of peoples' aspirations, needs, values, beliefs and preferences and their representation is a debatable, but unavoidable, issue due to its implications for research.[6] Scholarly arguments have attempted representations ranging from the possession of these primal orientations by individuals as real and objective attributes that are independently observable, at least in principle, to those representations from revealed preferences. Besides the unsuccessful search for these real objective attributes, doubts have been raised by Lindblom as to whether or not "the foundation of social problem solving lies in uncovering or discovering what it is that people prefer, want, need, or what it is that serves their interests. The alternative view is that they are not discoverable--not even to a degree that warrants an attempt at discovery." Therefore, the challenge remains "to describe problem solving in terms that make sense despite the impossibility of searching for and discovering preferences, wants, needs or interests" (C. E. Lindblom, 1990,

---

[6] The exposition on drawbacks in the representations of aspirations and needs is based on the work by C.E. Lindblom (1990) on human inquiry and knowledge as they are employed in social problem solving, especially chapter two, on volitions.

p. 18). In turn, the "revelation of preferences" argument is linked to a procedural rule. That is, whether in a democratic election or the market, the realization that "the question of what constitutes a good procedural rule differs from the question of how to ascertain wants or interests." (C. E. Lindblom, 1990, p. 19).

Formulating a Problem and Opportunity Domain

Thus, a premise is established that representations of aspirations, needs and knowledge are selectively chosen and formulated as causal concepts in the process of specifying a problem and opportunity domain for action in the solution of an identified social problem. Two characteristics of the above premise help make the process explicit. First, the premise does not establish that the formulated and selected causal concepts, by representing aspirations, needs and knowledge, meet all the requirements to fully solve a social problem. It is not possible to do so. Second, the selection is subject to challenge and reformulation. In other words it is subject to change. Change emanating from new or different representations in the context of reformulating the problem and opportunity domain reflects a changing and dynamic social and physical world.

In the problem and opportunity domain context causal assertions are dealt with as causal connectedness, subject to feedback, among the formulated and selected concepts. Causality, in this sense, possesses a quality of requiredness

and concomitant variation. Causal connectedness between concepts is inferred, assumed, or validated if the variation in one requires variation in the other and results in concurrent variations or changes in both concepts. The sign of the causality can be either positive or negative depending on whether the causal connection is judged to be a direct or an inverse relationship. For example, in a context of causal assertions, the growth in population is perceived or expressed as requiring a concomitant variation in the need for more food. A positive direct causal link or connection is established; if one increases then, to some degree, the other also increases.

The Scope of the Analysis

At the cognitive level institutions can be analytically represented as a complex system of concepts representing values, beliefs, desires, needs and knowledge, all characteristically vague but recognizable elements of a shared intuition or intellect, arranged in a causal relationship. Institutions, notwithstanding their inherent quality of vagueness, can in their analytical representation be specified in terms of a core and a periphery of causal concepts.

Introducing a Dynamic Perspective

The changing nature of the institutional cognitive dimension can be visualized via changes occurring within the core and between the periphery and the core of selected and

formulated causal concepts. The notion of a core as differing from a periphery in studying relationships in an institutional setting presupposes the establishment of a subset of shared causal concepts. Certain causal concepts are shared because their content is considered more valuable, meaningful and/or useful than others by individuals, communities or society in the search for solutions to problems and in exploring ensuing opportunities during a period of time (years or generations). The core is maintained as such by its shared quality. In this sense, the core's claim to existence rests, not only in the nature of the concepts themselves but in mutual sharing of asserted causalities by individuals, communities or societies. The periphery remains in continuous transition and constitutes a source for new causal concepts and causal structures to emerge, disappear and compete as alternatives to the established core, until new causal concepts, or even a new core, challenges the sharing nature of the established core. A dynamic basis for institutional evolution and change is provided by this attraction and distraction.

In the above context a decision framework is a construct of an interacting core of causal concepts from a set of institutions that provides us with the means for formulating decisions to act. When the causal concepts interact to create a decision making framework, the range of formulation for decisions can go from certainty to ambiguity, from stable to unstable. The institutional core of causal concepts, as

differentiated from the periphery, provides maximum information with the least cognitive effort. There exists a caveat; the information is filtered through the value and belief system embodied in this core of causal concepts providing the framework for the decision. Such is the context or environment that conditions the formation of institutions and in turn the pervasive role institutions play in shaping perceptions of causality.

This attempt to model institutional dynamics requires explicit consideration of certain philosophical, theoretical and methodological issues. The structure and use of language, the vague nature of its terms and categories, are, for purposes of this research, means of communication cohering individuals, communities and societies. This is not the exclusive realm of all-or-none descriptions, A or not A. It thrives on the A and not A, that is, on statements of degree. It is not exclusively bound to the notion of arbitrary precision with single or range numbers specificity as a basis for causal representation. The concerns are more with a degree bound accuracy of descriptions under a vagueness of conceptual categorizations. International agricultural research is conceived and done under a more or less accurate description of the world. The description emerges from the selection and formulation of a core of shared causal concepts by the decision makers. The decision making framework, in this case, consists of institutional representation by the agents of a

dynamic core, a shared causal and interactive conceptual nucleus with feedback, and as an analytical alternative or complement to conventional processes of infinitesimal and probabilistic calculus modelling without the agents' participation.

This study of international agricultural research deals, foremost, with the institutional setting in its cognitive mode, as a dynamic core of causal concepts in the political economy of securing food for an expanding world population. The periphery of this setting, diffuse and changing in nature, has variable and usually unknown boundary conditions particularly relating recently to resource use and the sustainability of food production.

Thus, for some situations, often those of maturity in both time and space, the core is well developed and the periphery is less in flux. Emerging situations, however, may find little within the institutional setting to provide a common and stable core. In these circumstances the periphery becomes larger, highly dynamic, creating a need for a revolutionary (new and untried) or an evolutionary (structural modified) institutional setting.

A Transition to Application

In relation to the above discussion, the notion of a decision-making framework materializing as a causal core structure of concepts shaped by interacting institutions becomes the focus of the analysis. Conceived in these terms,

the shared decision-making framework utilized by agricultural researchers, research administrators, representatives of governmental and non-governmental organizations, and other active decision making participants in international agricultural research, can be analytically represented by an institutional cognitive pattern (ICP). As a decision-making framework such a pattern can bring values, beliefs, knowledge, processes, policies and objectives into a causal representation; all of these representations or concepts are selected and formulated by the decision makers with a shared sense of commitment and, also, as determinants of their behavior. In this sense, ICPs become vehicles through which the institutional dimension of change in international agricultural research can be analyzed. As heuristic devices the patterns or maps represent frameworks for formulating decisions to act toward the solution of problems and the identification of opportunities in diverse agricultural socio-physical domains.

The core and periphery of two ICPs are portrayed below in Figure 2-1. The ICPs, representing specific problem and opportunity domains, are visualized as intersecting rectangular prisms each containing a core of causal concepts (circles connected with directed arrows inside the prisms) and surrounded by a periphery of concepts (circles outside the prisms). For example, if one of the ICPs represents the need to increase agricultural production, as one of the domains

(one of the prisms), and the other ICP the need to protect the environment (the other prism), the intersection of the rectangular prisms shows the concepts they have in common. In this example those domain concepts represent the natural resources. But the intersection of the ICPs does not necessarily require that the causal assertions among concepts for both ICPs be the same or that they share directionality.

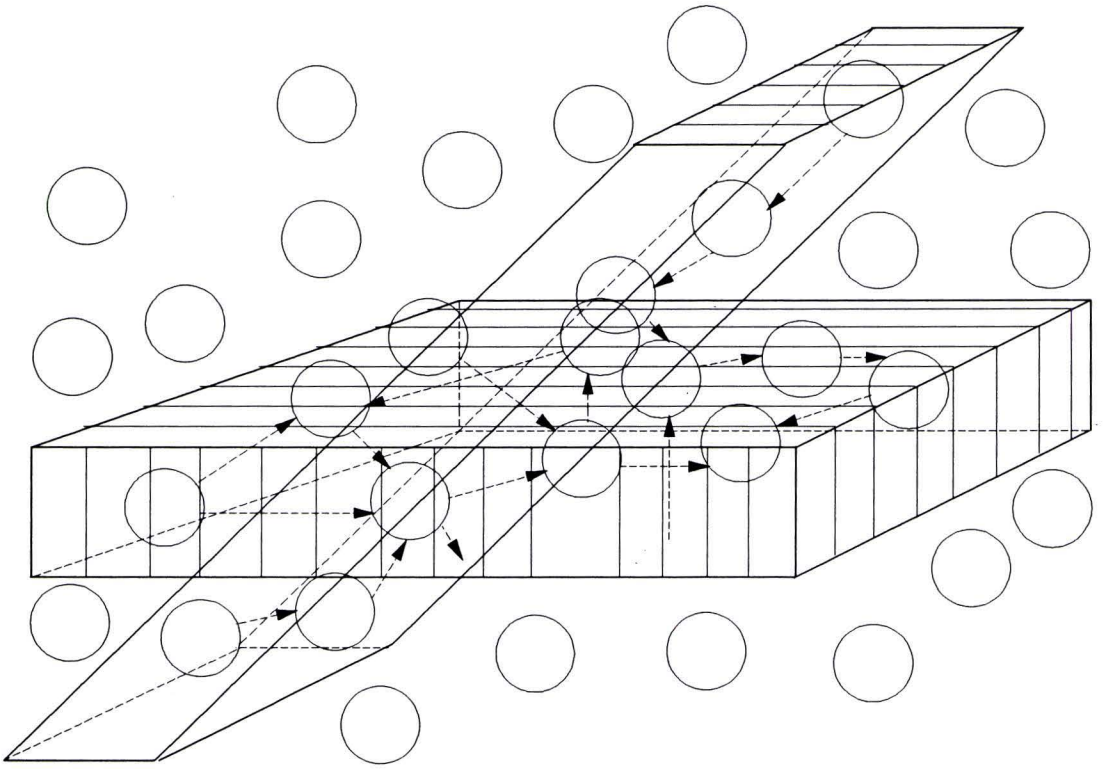

Figure 2-1 Intersecting ICPs: Core and Periphery

The portrayal in Figure 2-1 also permits an image of a new ICP emerging from another. The emerging ICP may contain different causal concepts while keeping some common ones from

the ICP from which it originated. For example, initially, rural development and farming where perceived as one and the same (the horizontal prism). Later, rural development incorporated new concepts and causal assertions from a changing periphery (e.g., non-farm income, bedroom and retirement communities, etc.). In a counter-clock fashion an independent rural development ICP emerges (the slanted prism) keeping a common axis (the rural landscape) with farming's ICP (the remaining horizontal prism).

Summarizing and Establishing Analytical Guidelines

Institutions consist of the broader patterns in the way society perceives its needs and aspirations and agrees among its members about how to meet these needs and aspirations. Institutions have two sequential dimensions. One is cognitive and primal: the perception of a shared image of causal relationships of ideas, concepts, and a sense of what is possible, as a problem and opportunity domain. The other dimension, emanating from the first, is a complex of normative systems as principles for action: the response embodies the ensuing agreements on how the needs and aspirations should be addressed. In this institutional setting, organizations are means through which members of society operationalize and accomplish the materialization of their aspirations and the satisfaction of their needs. An organization represents a specific set of capabilities allowing it to function in a given institutional environment that sanctions the use it

makes of society's resources. Organizations derive their legitimacy from the institutional setting from which they emerge. Nevertheless, over time, organizations also can be managed for action to modify the institutional setting when it prevents accomplishment of aspirations and satisfaction of needs.

Institutional cognition results in the representation of needs, aspirations and knowledge through the selection and formulation of shared concepts, notions or ideas and causal assertions in the process of specifying a problem and opportunity domain. The materialization of this representation depends on the participants (individuals, groups, communities) who define the boundaries of the problem and opportunity domain and share selected and formulated concepts and causal assertions. The above participants establish, also, whose aspirations and needs, as well as which ones, are perceived, selected and formulated.

The institutional dimension of change is introduced through the notion of a core and a periphery of causal concepts. A core emerges due to the sharing of certain causal concepts. The content of the shared causal concepts is considered more valuable, meaningful and/or useful than others by individuals, communities or the society in search of solutions to problems and in exploration of ensuing opportunities. The periphery constitutes a source for new causal concepts and causal structures as alternatives to the

established core. In this context an institutional decision framework is a construct of an interacting core of shared causal concepts from a set of institutions that provide the means for formulating decisions to act. Institutional change is a collective response to alterations in the results of sharing, selecting and reformulating values, beliefs, needs, aspirations, knowledge and the sense of what is possible. The sources of change can be analytically envisioned through the following:

a) One or more concepts can be discarded from the institutional core and/or the strength and/or the direction of the causal assertions can be reformulated.

b) Causal concepts from the periphery can become part of those shared in the core.

c) Causal concepts may pass from importance in the core to periphery status.

d) A different problem and opportunity domain or a different way to specify the same domain can elicit a different selection and formulation of causal concepts.

e) The problem and opportunity domain can change by narrowing or expanding its boundaries, or by the combination of two or more domains.

f) A change in the problem and opportunity domain can redefine the corresponding institutional core and its periphery.

This study depicts international agricultural research as being conceived in response to a socio-physical problem and an opportunity domain specified resulting from a shared core of causal concepts and relations. International agricultural research is committed to cognitive and normative commitments to food security, the complex issue of maintaining an adequate food supply, and to the continuous securing of food sources on a global scale. The decision-making framework utilized by decision making participants in international agriculture research can be analytically represented by an institutional cognitive map (ICP), as the core of shared concepts and causal assertions.

CHAPTER 3
METHODOLOGY

The theoretical, conceptual and methodological discussion of the previous chapter provides the basis for specifying the applicable methodology and the selection of an analytical procedure for analysis of the institutional dimension of change in international agricultural research. Following from the theoretical base, this chapter addresses, first, the construction process of an institutional cognitive pattern (ICP) representing a structural core of causal concepts in a problem and opportunity domain. Second, it specifies an ICP matrix and identifies an algorithm for its pattern behavior analysis; and, finally, this chapter, discusses the available sources of data and the procedures for the derivation of an ICP from an identified data source.

An Institutional Cognitive Pattern: Matrix and Algorithm

A desire to understand the influence on problem solving of the images individuals form of their surrounding social and physical world leads to the development of cognitive patterns or maps. A variety of cognitive maps have been in use in psychology, political decision analysis and, lately, in unsupervised learning by adaptive neural networks and fuzzy systems research (R. Axelrod, 1976; B. Kosko, 1992). Cognitive

patterns or maps are not common in the economist's box of tools. Maximizing behavior in economics provides a powerful and inclusive image-to-assumption paradigm. By portraying the images held by individuals when engaging in activities of economic consequence such as maximizing, economic models are often removed, by assumptions, from other conceptualizations. This assumption allows economists to concentrate on the "behavior" of commodities, prices, production, consumption, interest rates, income, etc., as their prime focus of interest in most economic studies. Boulding, in responding to the maximizing assumption notes that, "one is struck with the extraordinary assumption that it makes about the image" and when an individual, our "economic man," faces uncertainty, he maximizes the expected value of his decisions. Nevertheless, there is still "a large field of investigation open ... in the general area of economic perception, information, images, and transformation of the image." (K. E. Boulding, 1977, p. 86)[1] The premise is that international agricultural research,

---

[1] Various other methodological views in economics are within a holistic perspective of institutional analysis, specially in its normative context. For example, the induced institutional innovation model, by extension of standard microeconomic theory, portrays institutional change as endogenous to the economy and uses the term institution to include both institution and organization (Y. Hayami and V. W. Ruttan, 1985, p. 94 and footnote 30). This view exists, in the economic literature, vis-a-vis the postulates that the economy and economic performance are endogenous to a given institutional setting and a distinction must be made between institutions and organizations. Thus, institutions are studied to understand the foundations of public policy (D. Bromley, 1989) and the consequences of institutions for economic (or societal) performance through time (D. North, 1990).

a puzzle-solving scientific activity under its practitioners' paradigm (T. S. Kuhn, 1970), responds to an image of the problem and opportunity domain held by the participant decision makers through a core of causal concepts about the socio-physical world where their actions unfold. In this study the analytical representation of the above image corresponds to an institutional cognitive pattern, as discussed in the previous chapter.

Signed Digraphs of a Fuzzy Nature with Feedback[2]

Early unidirectional concepts of cause-and-effect led to capturing causal relations in digraphs, graph models representing directional patterns, as means to understanding frameworks or images used in decision making. Later, this representation was considered too simple and feedback was also recognized as an important part of the studied causal relations' patterns in the analysis of networks.

Causal relations are analytically defined as a finite domain of concepts. A causal relation is a statement about concepts in a finite problem and opportunity domain. In digraph terminology, the causal relations are edges and concepts are nodes. Edges connect any two nodes and represent, both in sign and magnitude, the way in which nodes interact.

---

[2] This section draws from the works of D. F. Robinson and L. R. Foulds (1980) on digraph theory, S. Miyamoto (1990) on fuzzy sets, G. P. Richardson (1991) on feedback thought, and B. Kosko (1987, 1992) on adaptive inference, neural networks and fuzzy systems.

Therefore, a signed digraph of a fuzzy nature consists of a finite set **C** = $\{c_1, c_2, \ldots, c_n\}$, a row vector of concepts, and a relation of causality, **R**, on **C**.

Concepts or nodes and their causal relations are fuzzy in nature because they do not possess clearly defined boundaries. In classical set theory each element, of the set of all elements, either belongs or does not belong to a subset of the entire set. The characteristic function of set theory, that is, the function either belongs-to or does not-belong-to, is generalized in fuzzy set theory to represent degrees of relevance. Relevance, in this case, represents degrees to which elements belong to a subset. A fuzzy set defined by such a membership function is interpreted as a monotone family of non-fuzzy sets.

The above interpretation is mathematically possible because fuzzy sets are formulated in terms of a multivalued set theory. They are based on the simple idea of a continuum valued logical framework instead of an either/or dichotomy. In other words, fuzzy sets allow one to deal mathematically, for example, with questions such as: when does a forest cease to be a forest? A question that bivalent, either to be or not to be, binary logic is unable to address until arbitrarily, technically or otherwise, a number of trees, among probably other characteristics that could define a forest, is chosen.[3]

---

[3] For an initial non-technical introduction to fuzzy logic see B. Kosko (1993).

The theory of fuzzy sets represents a mathematical advancement in relation to the use of early analytical representations in terms of distributions in space as means to understand human decision making behavior. Fuzzy sets have contributed a useful framework for the mathematical modelling of such systems where "subjective human judgments or expressions in natural language must be interpreted in terms of numbers or distributions in a space measurement" (S. Miyamoto, 1990, p. 1).

The fuzzy relation **R** defined on the finite set **C** is represented by means of a fuzzy cognitive map (FCM) as a collection of classes and causal relations between classes (B. Kosko, 1987, 1992). For any two concepts or nodes representing a class or concept in **C**, $\mathbf{R}(c_i,c_j)$ is represented by the directed edge e_{ij}, the grade of connectiveness from c_i to c_j. The causal assertion **R** measures how much c_i causes c_j. The sign of the directed edge e_{ij}, positive or negative, indicates whether an increase (decrease) in c_i will cause an increase or a decrease in c_j. A direct relation, a positive e_{ij}, means that an increase (decrease) of the level of c_i results in a causal increase (decrease) of c_j. An inverse relation, a negative e_{ij}, means that an increase (decrease) of the level of c_i results in a causal decrease (increase) of c_j. In other words, the causal concepts represented by the nodes, c_i, $i = 1,\ldots\ldots,n$, are variables with degrees of intensity. By assumption (B. Kosko, 1992), the e_{ij} are taken to be values in the interval [-

1, 1], with e_{ij} = 0 meaning no causal effects and all other values in the assumed fuzzy interval correspond to different levels of causality. Therefore, an institutional cognitive pattern is constructed as the set of causal assertions in a fuzzy signed digraph with feedback. A simple graphical example of the above can be drawn in terms of causal concepts commonly expressed in the context of environmental protection concerns:

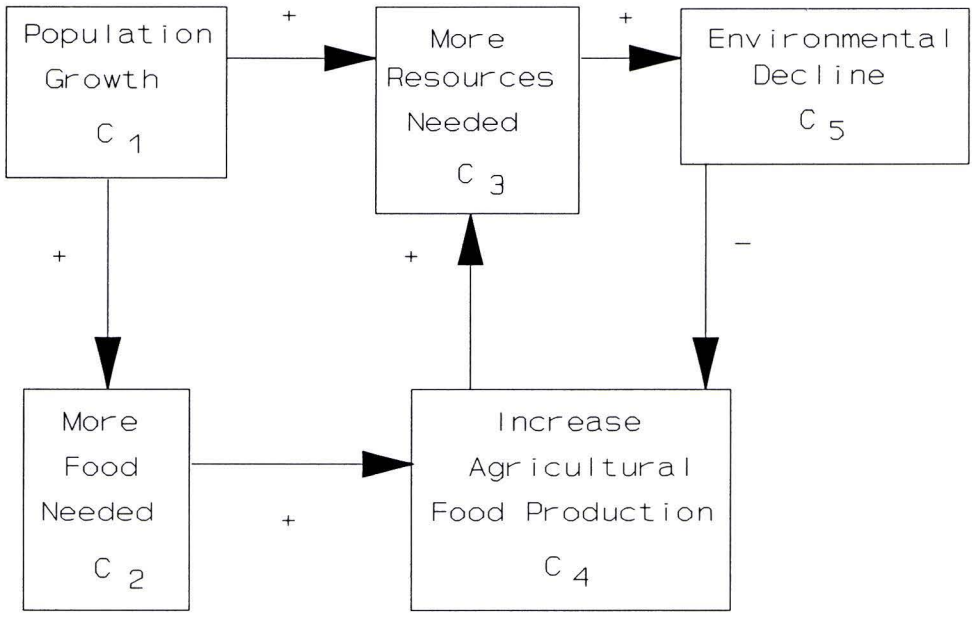

Figure 3-1 A Simple Signed Digraph with Feedback

The feedback element in the representation of an institutional cognitive pattern, as a dynamical system by means of a fuzzy signed digraph with feedback, has important implications. Feedback is inherent in continuous decision making; therefore, it seems reasonable to expect representations of decision making frameworks to incorporate feedback loops. Also, non-linearities are part of the characterization of socio-economic feedback systems.

The Matrix Specification

Due to the finiteness condition of the sets, a convention is possible in order to make a fuzzy relation equivalent to a matrix (S. Miyamoto, 1990). For a given core of n concepts, an institutional cognitive pattern can be represented by an n x n adjacency or connective matrix of edges, $\mathbf{E} = (e_{ij})$, $i,j= 1,\ldots,n$. The i-th row of **E** contains the causal assertions, $e_{.j}$, originating out from concept c_i; and the j-th column, correspondingly, contains those causal assertions, $e_{i.}$, directed into c_i. A zero entry means no causal relation. It is also reasonable to assume that there is no auto-causality. That is, a selected and formulated concept in an ICP does not cause itself. This translates into a main diagonal of zeros in the **E** matrix.

The graphical example of the previous section (see Figure 3-1), the signed digraph with feedback, becomes equivalent to a square matrix of 5 x 5, in which each element represents the causal assertion between concepts. Also, each element is correspondingly signed , positive or negative:

	C_1	C_2	C_3	C_4	C_5
C_1	0	1	1	0	0
C_2	0	0	0	1	0
C_3	0	0	0	0	1
C_4	0	0	1	0	0
C_5	0	0	0	-1	0

A Neural Network Algorithm

The problem of predicting the dynamic system behavior of institutional cognitive patterns, that is, the behavior of causal concepts with feedback in complex problem and opportunity domains, can be difficult to accomplish through the assumption of an a priori specified functional form for the pattern model.

In contrast, the above matrix specification with a feedback generalization allows making inferences from the causal concepts process represented by an institutional cognitive pattern. Institutional cognitive patterns, as fuzzy cognitive maps, are dynamical systems whose sequential structure of positive and negative feedbacks generates a cycle

behavior as an evolving forward inference. The inference process algorithm proceeds as feedback associative memory recollections in a neural network (B. Kosko, 1987, 1992).

In neural network algorithms an important specification is the threshold level of activation of the causal relation. The non-linear threshold operator is represented by a threshold vector, **T**, whose values are specified levels in the interval [-1, 1] meant to represent activated levels of the causal relations. In other words, the elements of a row vector, $\mathbf{C}_i$, a state vector of causal activation at a discrete time t, take on values, for example 1 or 0, at a time (t + 1) depending on whether the result of the threshold operation gives, in this example, a value of greater than zero or a value less or equal to zero. Following a convenient state-transition matrix notation (M. A. Styblinski and B. D. Meyer, 1988) the above can be written as:

$$\mathbf{C}_i(t + 1) = \mathbf{T}[\mathbf{C}_i(t)\mathbf{E}] \qquad (1)$$

where $\mathbf{C}_i(t)$, $\mathbf{C}_i(t + 1)$ and **T** are as specified above. **E** corresponds to the matrix of causal edges described in the previous section.

The neural algorithm proceeds by actively sustaining a proper source node or concept exogenously. A proper source concept or node is one that, in the cognitive pattern representation, has only outward causal relations or edges. In a similar manner, a proper sink concept is one that has only

inward causal relations.[4] The initial input vector, $\mathbf{C}_i(t)$ at time t = 1, actively contains the proper source causal concept, k. Thus, e_{ij} = 1 for i= k and j= k. The inference cycle continues until the matrix operations with thresholding, as specified in (1), reaches a resonant limit (a fixed point or attractor) or stabilizes on a limit cycle (a periodic pattern) in the causal edges matrix **E**. It is also possible under certain conditions or pattern specifications to end up in chaotic resonance or no limit cycling (B. Kosko, 1987).

Finally, it is worth noting the strength and weakness of the above approach. As summarized by Kosko, the fuzzy cognitive map's "knowledge representation and inferencing structure reduces to simple vector-matrix operations, favors integrated-circuit implementation, and allows extension to neural, statistical, or dynamical techniques;" but institutional cognitive patterns, as fuzzy cognitive maps, will also, in their attempt at portraying a social-physical world, encode the participants' "knowledge or ignorance, wisdom or prejudice" (B. Kosko, 1992, p. 155).

Sources of Data

The empirical analysis of institutional cognitive patterns (ICPs) is confronted with collection of qualitative data from a database where information about concepts and

---

[4] For further definitions on source and sink nodes in the context of digraphs see D. F Robinson and L. R. Foulds (1980).

causal assertions is primarily all that is registered. Unlike analysis that draws data from a bureau of statistics to numerically validate variables, the analysis of ICPs has no available measures such as GNP[5], consumer income, trade figures, voting records, or opinion polls. Research on ICPs has no yearbook to turn to, much less quantitative data presented in standard units. No less important is the question on whether or not documentary and other evidence can be transformed into data that are both replicable and relevant to the research problem and to its supporting theoretical and conceptual base.

The documentary nature of the data must be understood as a vehicle through which the concepts and causal relationships, conceptualized by individuals, are expressed and registered, either by themselves or, hopefully, verbatim by others. The research does not create these conceptualizations; it attempts to represent them in an institutional cognitive pattern for its analysis.

Notwithstanding the above difficulties, the premise is that for the institutional dimension of change in international agricultural research, an institutional

---

[5] Nevertheless it is worth remembering the technical and political debates that took place at the creation of the national accounts and the assumptions and rules for the field collection of the data (which, as a matter of fact, change with time or, as it is said, the data are upgraded). Later, recall the discussions of whether growth is or is not synonymous with development. And, recently, whether GNP figures reflect what nations are coming to value more such as the environment.

cognitive pattern perspective helps in grasping the origins of changes in the IARCs that have occurred in the past and their implications to changes occurring in the present.

Encoding the Available Data[6]

The primary sources of data available for this research are documentary. This is certainly valid for the analysis of historical institutional cognitive patterns. Those which are being challenged concern acceptability for the future.

It is not in the scope of this research to develop rules for encoding data from documentary evidence. Use will be made of existing methods that have been shown to be reliable and have been previously applied in the context of cognitive map representations as the end product of the encoding documentary process. Certain basic criteria can be made explicit. First, the building block in an ICP is the causal assertion, a statement that relates, positively or negatively, one concept to another. Second, the cause concept, the effect concept and the assertion itself are represented as variables subject to taking on different values. Third, the coding person has to be in a position to perceive the documentary data both from the structural point of view and from its content. Fourth, it has to be expected that some individual initial concepts would, by necessity, be merged into broader classes for the

[6] The concepts and rules of coding are adapted from M. T. Wrighton's "The Documentary Coding Method" in Appendix One in Axelrod (1976).

establishment of patterns in the institutional context of analysis.

Language Barriers in a Global Challenge

The language of analysis in this research is, first, English and second, mathematical. English is already as varied as those who use it as a first language but even more so among those for whom it is a second language. Thus, the complexity and difficulties of the documentary coding task are compounded in an international setting. In the context of this ICP analysis of international agricultural research, the influence of U.S. researchers as the pioneers of what became the system of international agricultural research centers is undeniable. So in one sense, the complexity and difficulties of the encoding task remain bounded in English; but from an international perspective, English, beyond a narrow transmittal-of-information role, is also a cultural and institutional vehicle on whose expressions of causal concepts were based the ICPs that have guided international research in recent decades.

Theory and Praxis: A Summary

The construction of an institutional cognitive pattern is an attempt to represent the way in which individuals conceptualize shared concepts and their causal relationships as integral parts of the image they possess of a problem and opportunity domain. International agricultural research is,

thus, conceived to respond to a problem and opportunity domain image. This image is held by participant decision makers in the research process through a core of causal concepts about the socio-physical world where their actions unfold.

Institutional economic modelling of international agricultural research has not been attempted. The difficulties arise from the fact that international agricultural research does not possess an ex-ante functional model of discovery nor one of the domain where it performs and where decisions are made. Analytical tools that are more appropriate in these circumstances have emerged from multivalued logic and neural network analysis. They contribute to a practical framework for the mathematical modelling of systems capable of interpreting subjective judgments, or expressions in natural language, in terms of numbers or distributions in space measurement. In this context, signed digraphs, with feedback in a neural network paradigm become a feasible graphical and mathematical representation of an institutional cognitive pattern. A matrix equivalency of such a representation allows the use of a neural algorithm to study the behavior of institutional cognitive patterns as a forward inference in time.

Concepts and causal relationships are primarily qualitative data. The sources of data are documentary in nature. Documents are understood to be the vehicles through which the conceptualization of causal concepts by individuals are registered in natural language. Use will be made of

existing language encoding methods that have been applied and shown to be reliable in the context of cognitive map representations. The complexity and difficulties of the documentary coding task are, in this research, bounded by the English language. Nevertheless, it must be recognized that in a multilingual international setting the complexity and difficulties of encoding are compounded.

CHAPTER 4
ANALYSIS

Although the construction of an institutional cognitive pattern consists of two elements (the concepts as variables and the causal assertions as the relations between the variables) its empirical representation, as discussed earlier, is a complex and difficult task. Nonetheless, the activity is an important one if an assessment of the institutional dimension of change in international agricultural research is attempted. Accomplished across cultures, languages and national boundaries through a system of international agricultural research centers with regional or global mandates, this international research has inherent structural uncertainties. Not the least of these are the serendipitous nature of the research process itself, the unknowns in future technological applications, the outcomes of the process of technology adoption, and the final socio-economic and environmental impacts.

The analysis in this chapter is performed under the premise that the above conditions necessitate exploration of shared patterns of causal concepts. These shared patterns become the means integrating and guiding the decision making processes of the participants in international agricultural

research, and providing the rationale for investigating how these patterns behave. Empirical construction of institutional cognitive patterns is confronted both as the representation of the structural shared causal core, and as a participatory analytical tool to further improve the decision making process.

This analysis, given the sequence-in-time nature of the investigation, follows an historical perspective.[1] Only in a few occasions can the event that originates a process be clearly determined. But in this case, the year is undoubtedly 1941. Although preliminary conversations took place early in the year, the event that started what later developed into the Green Revolution and a system of international agricultural research centers was the arrival in Mexico in July, 1941 of the Survey Commission. The Commission, consisting of three scientists from the fields of plant protection, soils and agronomy, and plant genetics and breeding, named by The Rockefeller Foundation, was given a simple mandate: "Go to Mexico and find out whether you think the Foundation could make a substantial contribution to the improvement of agriculture, and if so, how?" (E. C. Stakman, R. Bradfield and P. C. Mangelsdorf, 1967, p. 24-25). Beginning in 1950 the Mexican experience and pattern extended to action programs in Colombia, Ecuador, and Chile.

---

[1] Summarizing of the historical sequence of events is based primarily on the extended and detailed recollection made by E. C. Stakman, R. Bradfield, and P.C. Mangelsdorf (1967).

Success in Latin America created the incentive for the effort to cross the oceans to another continent. In April, 1956 the Indian government and The Rockefeller Foundation signed a formal cooperative agreement for the improvement of maize, sorghum and millet production and for the development of a modern postgraduate school of agriculture. In the words of Stakman, Bradfield and Mangelsdorf the conditions of India "were almost unique". In comparison "the problem in Latin America had been to introduce agricultural sciences into the various countries; the problem in India was to help agricultural scientists to function." (E. C. Stakman, R. Bradfield, and P. C. Mangelsdorf, 1967, p. 241).

Another significant event consisted of fostering increased interest in collaboration that emerged in 1949 in the congress of maize breeders attended by corn breeders from 10 countries of Latin America. Starting from a Central American Corn Improvement Project, which expanded the collaboration as the International Maize Improvement Project, the effort also included the principal corn growing countries of South America: Venezuela, Brazil, Peru, Bolivia, Argentina and Chile, and later, by 1963, a total of 13 Latin American countries. In the case of wheat and potatoes, the effort evolved similarly, although the wheat program rapidly projected itself towards the Near and Middle East. In 1959, these programs became part of the Inter-American Food Crop

Improvement Program designed to contribute more effectively to the improvement of basic foods in the Western Hemisphere.

The above sequence of events can be seen as an extension of what had become a successful research endeavor through partnerships between countries. By the early 1950s, the Latin American success further encouraged a look at the most densely populated region with the greatest number of hungry people - the Far East. Also, by this time, organizations such as the Food and Agricultural Organization (FAO) of the United Nations were operational. FAO had targeted the improvement of rice diets as probably the most important food problem in the world, and observers of the region linked such improvement to world peace and security. The magnitude of the task was a sobering signal not to try to tackle this problem without the participation of other committed participants of international experience. In 1962 Ford and Rockefeller, the two donor foundations more active in the international arena, joined forces, and together, with the Philippine government, created the International Rice Research Institute (IRRI). In the wake of IRRI's creation, the Mexican government and The Rockefeller Foundation reached an agreement in October, 1963 to transform the corn and wheat research improvement programs into the International Center for Corn and Maize Improvement (CIMMYT). The creation of these two centers initiated the era of the international agricultural research centers as the

organizational vehicles for performing commodity research with a global reach.

A Search for Data

Researchers do research. They rarely write about why they do what they do. As expected they are busy on the trail of discovery; leaving written information for social science analysis of their endeavors is the least of their challenges. Short of prying into the private files of the foundations and of other participants, few sources were prepared, as the above history evolved, from which to obtain information. A comparatively extensive approach to articulating and trying alternative causal concepts and their relationships is hampered by the shortage of public documents prepared by early participants and active observers of the Mexican agricultural research. Only one public account, detailed and probably most complete, of the events that evolved during the first two decades is available. This document, insightfully recounted by the three scientists who did the initial survey, was recorded twenty years after the experience in "Campaigns Against Hunger" (E. C. Stakman, R. Bradfield, and P. C. Mangelsdorf, 1967). Their record explains what was intended, what were the goals and what, in their opinion, were the accomplishments. Another source, an academic work written later by two experienced agricultural specialists, reviews important issues including the mobilization of the world assistance community and inclusion of the IARCs (To Feed This World: The Challenge

and the Strategy by S. Wortman and R. W. Cummings, Jr., 1978).[2]

Stakman, Bradfield and Mangelsdorf's recollections as a documentary source of data has important features. In terms of the collective approach that was taken, the document reflects more than one person's exclusive point of view. Also, they were the members of the survey team whose recommendations, in a sense, started it all. All were seasoned and experienced scientists with international exposure at the time of the survey. Over the next two decades, the reported period, they continued their involvement with the programs as consultants and advisers to The Rockefeller Foundation. All three prepared the joint recollection and were given a free hand in writing what they considered to be more important. They chose to record the principles, basic objectives, the most significant procedures and the results of the operational programs and not details of the grants given in aid to individuals or institutions. Although, the work was planned together and they agreed on the general objectives, each wrote certain chapters "according to his own lights - and in his own way" always agreeing on basic principles, but they "sometimes agreed to disagree on subordinate issues", and they attempted to record

---

[2] The existence of these sources as possibly the only two sources, except for private files, with the first one closest to the events that evolved and the other more academic, was confirmed in a personal conversation with Dr. Robert Herdt from The Rockefeller Foundation during the 81st Annual Meeting of the American Agricultural Economics Association, August 1-4, 1993, Orlando, FL.

the accomplishments "as simply and nontechnically as is compatible with scientific accuracy" (E. C. Stakman, R. Bradfield, and P. C. Mangelsdorf, 1967, p. x-xi).

The Perception of Problems and Opportunities

All three members of the Survey Commission, as they reported:

> had seen the contribution of science, technology, and education to the phenomenal progress of agriculture in the United States during the quarter century prior to 1941. They had seen the introduction of many kinds of crops plants and the genetic improvement of old kinds. They had seen early-ripening, frost-escaping varieties of corn extend the corn belt 500 miles northward...the spring-wheat area extended farther...the winter-wheat belt extended half a thousand miles westward in the Great Plains...by the development of hardier varieties... They had seen, and indeed one of them had helped, the increase of the acre yields of corn by upwards of 25 percent through the development of hybrid lines...And they had seen the yields of many crops increased by 15 to 100 percent through the use of chemical fertilizers on lands whose native fertility had previously been considered inexhaustible.... (E. C. Stakman, R. Bradfield, and P. C. Mangelsdorf, 1967, p. 23)

The above quote is not only representative of the accumulated experience of the three members of the Commission but also represents their undisputable belief in the power of agricultural science to overcome the unyielding vagaries of nature wherever and whenever that power was diligently and intelligently applied. They wrote:

> From the ox to the tractor, from back-breaking peasant farming to the intelligent business of farming is a long and happy step; but the Survey Commission had witnessed that step in various areas of the United States. And they had faith that Mexico could take the same kind of step in an even

> shorter time because the general guidelines to progress had already been developed in certain other countries. The members of the Commission got ready to go to Mexico, armed with considerable experience, much zeal, few presuppositions, and no prejudices...In any case, as scientists they tried to approach all problems objectively. (E. C. Stakman, R. Bradfield, and P. C. Mangelsdorf, 1967, p. 24).

In 1941 the Survey Commission traveled, more than five thousand miles, through the countryside of Mexico. Their perception of the problems and opportunities in Mexico's agriculture were impacted by the following facts: a population, at that time, of 20 million that grew almost 19% in the previous decade and was expected to grow an additional 5 million in the following decade; crops harvested in just 17 million acres of cultivated land representing less than 0.9 acre of cultivated land per capita; and low yields per acre in the three basic food crops of the Mexican diet (corn, wheat and beans). These three crops together occupied about 80 percent of the croplands. Attempts to increase the amount of cropland were made by converting grassland into plowland where rainfall seemed sufficient and irrigation projects were built where rainfall was insufficient and extended droughts dwarfed the efforts (E. C. Stakman, R. Bradfield, and P. C. Mangelsdorf, 1967, p. 31).

The extended experience of the members of the Survey Commission in the United States made U.S. agricultural accomplishments in 1941 the basis for comparison. Thus, the

extent of the gaps in Mexico's three basic food crops production were established as follows:

Table 4.1 Differences in agricultural productivity (bu/acre) between Mexico and the United States (US) in 1941.

	Mexico	US
Population % increase (1930-1940)	18.7	7.2
Corn Average Yield (bu/acre)	8.0	28.0
Wheat Average Yield (bu/acre)	11.5	15.5
Beans Average Yield (bu/acre)	3.0	10.0

Source: E. C. Stakman, R. Bradfield, and P. C. Mangelsdorf, 1967.

The recommendations of the Survey Commission "stayed close to the earth...but let hopes soar high and roam wide in visualizing expectations" (E. C. Stakman, R. Bradfield, and P. C. Mangelsdorf, 1967, p. 32).

The members of the Commission, without envisioning easy agricultural miracles in Mexico, wrote:

> the most acute and immediate problems, in approximate order of importance, seem to be the improvement of soil management and tillage practices; the introduction, selecting, or breeding of better-adapted, higher-yielding and higher-quality crop varieties; more rational and effective control of plant diseases and insect pests; and the introduction or development of better breeds of domestic animals and poultry, as well as better feeding methods and disease control. (E. C.

Stakman, R. Bradfield, and P. C. Mangelsdorf, 1967, p. 32-33)

The underlying assumption in the presentation of the above plan was stated by the members of the Commission as their basic philosophy: "most rapid progress can be made by starting at the top and expanding downward" (E. C. Stakman, R. Bradfield, and P. C. Mangelsdorf, 1967, p. 33). They were aware of the differences in philosophy with extension programs of the Knapp type (Seaman A. Knapp cooperative farm demonstration campaign) that have been successful in improving Southern U.S. agriculture. For the members of the Commission, then, the sequence was clear. In the beginning there was to be research performed by competent researchers. Extension will follow and then, research and extension, together, will provide the basis for the later improvement of vocational schools of agriculture in Mexico. They were insistent in the need to capitalize on the educational value of the research and to provide for the advanced training of outstanding Mexican investigators and teachers. They stressed the participatory nature of the venture: "the intent was to work with Mexicans in doing the things that needed to be done, not merely to tell them how they should be done" (E. C. Stakman, R. Bradfield and P. C. Mangelsdorf, 1967, p. 33). The recommended plan of action was ultimately aimed at helping Mexico to become independent in agricultural production, science and education. They assumed the program would continue for at least a decade.

Encoded Concepts and Causal Assertions

The origins of the basic concepts and causal assertions held by the decision-maker participants in the Mexican agricultural cooperative program were rooted in the successful research efforts of the State Agricultural Experiment Stations in the United States. Since 1887 the experiment stations had been fundamental in the development of an agricultural science with practical applications. This pragmatism in research generated new technologies that improved the yield per acre of agricultural food crops and agricultural production in general, helping to transform U.S. agriculture into a science-based commercial activity. New values, developed in the agricultural sector, and scientific agricultural knowledge became readily available to farmers and started U.S. agriculture down the road to being one of the most productive in the world. This unparalleled success made the public funded experiment stations a model for agricultural research abroad (L. Busch and W. B. Lacy, 1986).

Nevertheless, the Mexican challenge brought new concepts and causal assertions as part of the structural core held by researchers. The causal assertions that emerge from the encoding of the available information suggest a sequence in their identification. The first one establishes the existence of a high percentage growth of population increasing the difference between the food needed and the food that is being produced. The diagnosis by the Survey Commission identified

three fundamental concerns. First, better farming was to come largely from the results of experimentation within the country and there was a lack of national agricultural scientists. Second, land was available but not good agricultural land. Third, yields per acre were low. The strategy was designed to overcome these challenges.

The Mexican government responded to the growing food deficit and the need for more agricultural land by investing in irrigation projects, requesting assistance from The Rockefeller Foundation and investing in the training of local agricultural scientists. Governmental support went also to cooperative public health programs to control infectious diseases which The Foundation has helped confront since 1919 through technical and managerial assistance.

The Rockefeller Foundation, playing a central role in the process that led to the increase of food production in Mexico, experienced increased motivation, in addition to the Mexican government's request and the Survey Commission recommendations, from reports about it's health program. These reports indicated that to raise the standard of health among the poorer Mexicans required better nutrition which in turn required a more productive agriculture. Also, the success of the Land Grant colleges, in applying agricultural science to improve agricultural production, gave The Foundation a source of knowledgeable and experienced agricultural scientists. These human resources provided a basis for following the

experiment stations' general guidelines for agricultural research that had already proven successful as well as a basis for believing in the possibility of success in Mexico.

The Institutional Cognitive Pattern Representation

From the above story, a total of 24 concepts and an equal number of causal assertions were identified as the structural core of the institutional cognitive pattern. This ICP depicts the causal assertions held by the decision making participants in the cooperative agricultural research programs that The Rockefeller Foundation assisted and funded in Latin America during two decades. The list of identified concepts is presented in Appendix A.

The institutional cognitive pattern is presented graphically in Figure 4-1 and its equivalent matrix in Appendix B.

The Neural Algorithm for Pattern Behavior Analysis

The neural algorithm for the behavior analysis of the institutional cognitive pattern is used in this research under the assumption that the edges representing the strength of the causal assertions take on either one of the following values: -1, 0,or 1. In other words, when a causal relationship exists between concepts it is assumed as having maximum effect, either positive or negative.

To simplify the analysis, the elements of the state vector of causal activation at discrete time t passes through

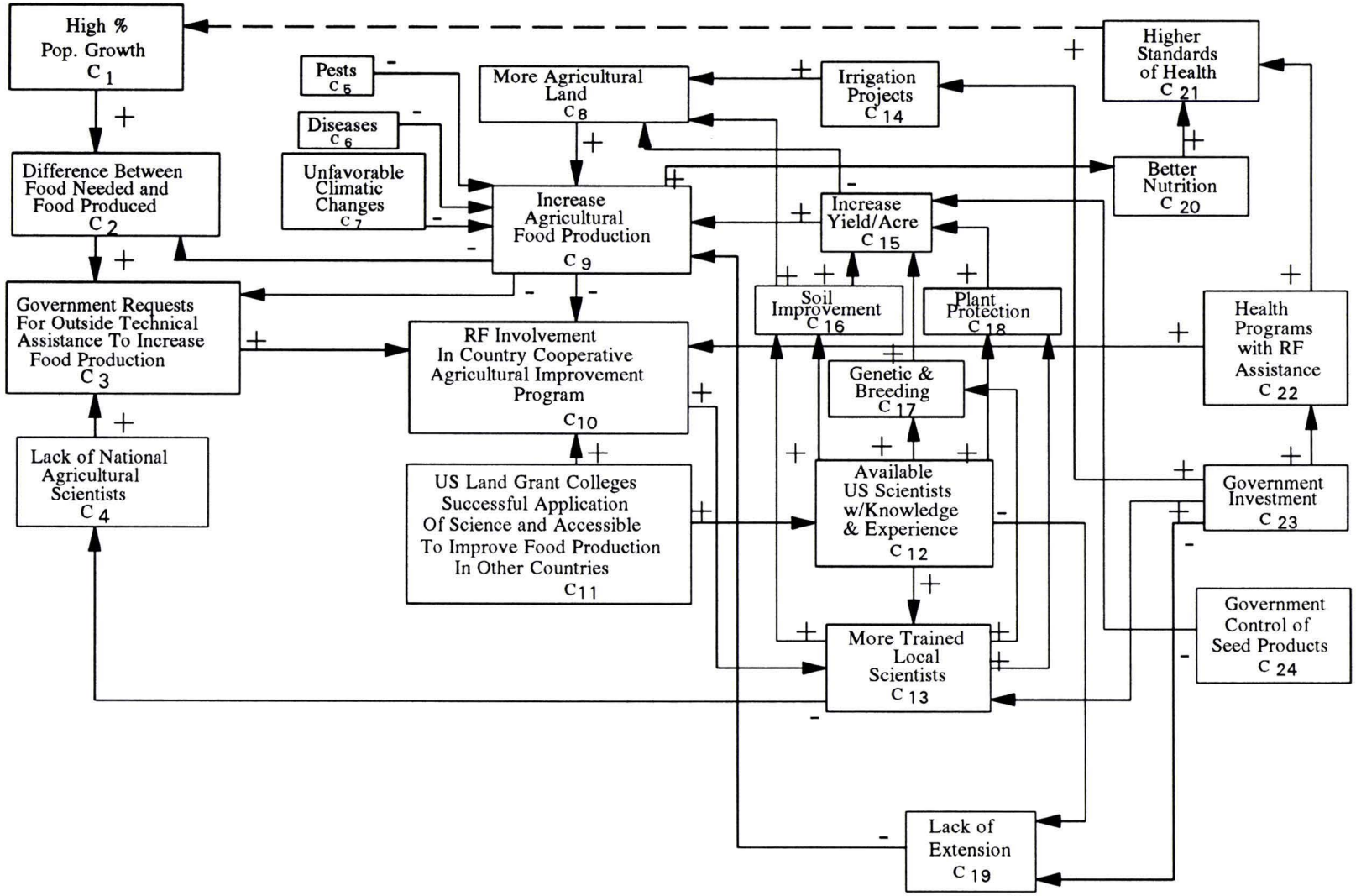

Figure 4-1 Institutional Cognitive Pattern in Mexico's Agricultural Improvement Programs (1941-1963)

the causal assertions matrix **E** with input activations thresholding, in each iteration, to 1 if greater than zero or to 0 if less or equal to zero. This means that recognition is made of only positive products resulting from the multiplication of the initial state vector elements by the row elements of matrix **E**, and, thereafter, from the corresponding multiplication in each iteration. Under these circumstances, the nonlinear threshold operation is defined at the limit for a threshold value of zero, turning causal node activation into either 1 or 0 values. Given the deterministic nature of the threshold operation, the causal flow quickly converges on a limit cycle (at the most in 2^n iterations) in the synchronous operation of simple institutional cognitive patterns (simple fuzzy cognitive maps). The first iteration recalled twice is the first state or stage of the limit cycle. A single stage corresponds to a fixed point or a degenerate cycle (B. Kosko, 1992).

The Analysis of the Institutional Cognitive Pattern

The core structure of causal concepts is represented in an institutional cognitive pattern (Figure 4-1) as guiding the decision making process for more than two decades of cooperative agricultural improvement programs involving The Rockefeller Foundation. The analysis now proceeds by considering the effects that a continued and sustained occurrence of one or more concepts has on the behavior of the

institutional cognitive pattern as inferences or predictions through time.

In the first of the two decades, population continued growing in Mexico to more than six million additional people, an increase of approximately 30% from the 19.7 million in 1940, and continued its growth thereafter. In the context of the institutional cognitive pattern, the population growth concept (C_1) remained exogenously active. The sustained activity of C_1 is represented by maintaining its presence during the inference cycle. Thus, the initial state vector of causal activation is: $\mathbf{I} = [e_{ij}]_{1x24}$, where $e_{ij} = 1$ for $i,j = 1$ and $e_{ij} = 0$ for $i,j \neq 1$, and $\mathbf{C}_1$ maintains the value of 1 during each iteration.

In accordance with the above, population growth is a permanent feature of the pattern behavior analysis of the identified ICP. Thus, the analysis proceeds as follows: first, the pattern behavior of the ICP is observed with population growth as its only continuously active concept. Second, the pattern behavior of the ICP is observed with government investments maintained active continuously and simultaneously with population growth, as was the case in Mexico's agricultural improvement programs during the twenty year period covered in this study. Third, the above resulting pattern behavior of the ICP in Mexico's agricultural improvement programs is, in turn, observed as government investments become deactivated and population continues

growing, a situation reflecting what occurred later in the 1970s.

The results obtained from the pattern analysis of the ICP via the application of the neural algorithm, with population growth as the only active concept, indicate that the structural core of causal concepts identified in the ICP behaves, in this case, as a limit cycle of 13 stages. The forward inference of the initial state vector activates the causal concepts in the following time sequence or cycle stages (see Appendix C):

1) Population growth ($\mathbf{C}_1$) increases the difference between the food needed and the food produced ($\mathbf{C}_2$) thus, motivating the government to request outside technical assistance ($\mathbf{C}_3$). Concepts $\mathbf{C}_1$, $\mathbf{C}_2$ and $\mathbf{C}_3$ become active.

2) The Foundation ($\mathbf{C}_{10}$) responds to the government's request and becomes involved in the country's agricultural improvement programs. Concepts $\mathbf{C}_1$, $\mathbf{C}_2$ and $\mathbf{C}_3$ remain active and $\mathbf{C}_{10}$ is activated.

3) The Foundation's involvement ($\mathbf{C}_{10}$), in addition to concepts $\mathbf{C}_i$, i = 1, 2, 3, makes it possible for U.S. ($\mathbf{C}_{12}$) and local trained scientists ($\mathbf{C}_{13}$) to initiate research activities. Concepts $\mathbf{C}_i$, i = 1, 2, 3, 10, 12, 13, are now active.

4) The research activity of U.S. ($\mathbf{C}_{12}$) and local trained scientists ($\mathbf{C}_{13}$) activates the generation of technologies to increase yields per acre in the fields of soil improvement ($\mathbf{C}_{16}$), genetics and breeding ($\mathbf{C}_{17}$) and plant protection ($\mathbf{C}_{18}$).

Active concepts at this stage are C_i, i = 1, 2, 3, 10, 12, 13, 16, 17, 18.

5) Research on soil improvement (C_{16}), genetics and breeding (C_{17}) and plant protection (C_{18}) result in increases in yields per acre (C_{15}). Also, more agricultural land (C_8) becomes available as a result of soil improvements. Active concepts at this stage are C_i, i = 1, 2, 3, 8, 10, 12, 13, 15, 16, 17, 18.

6) Increases in yield per acre (C_{15}) have resulted in increased agricultural production (C_9). Continued soil improvements are not sufficient for continuing the process of making more agricultural land available. Likewise, increases in yield per acre reduce the pressure for more land to increase food production. Thus, concept C_8 (more agricultural land) ceases to be active. Now active at this stage are concepts C_i, i = 1, 2, 3, 9, 10, 12, 13, 15, 16, 17, 18.

7) Increases in agricultural food production (C_9) have reduced the food deficit (C_2) eliminated the need to request outside assistance (C_3) and The Foundation's involvement (C_{10}). Concepts C_i, i = 2, 3, 10 are deactivated. More available food activates better nutrition (C_{20}). Concepts C_i, i = 1, 9, 12, 13, 15, 16, 17, 18, 20, are now active.

8) Better nutrition (C_{20}) brings higher standards of health (C_{21}). Active concepts at this stage are C_i, i = 1, 9, 12, 13, 15, 16, 17, 18, 20, 21.

9) A satisfactory state of increases in agricultural food production (C_9) and of higher standards of health (C_{21}) is attained. Also, the lack of involvement by The Foundation (C_{10}) in the past two cycle stages, deactivates the participation of U.S. and the training of local scientists (C_{12} and C_{13}) respectively. Concepts C_i, i = 1, 9, 15, 16, 17, 18, 20, 21, remain active at this stage.

10) Without scientists (C_{12} and C_{13}) research activities in soil improvement, genetics and breeding, and plant protection, concepts C_i, i = 16, 17, 18, no longer are maintained. Nevertheless, earlier research contributions, via higher yields per acre (C_{15}) still maintain an increase in food production (C_9). Thus, better nutrition (C_{20}) and higher standards of health (C_{21}) are not affected. Population continues growing (C_1). At this stage concepts C_i, i = 1, 9, 15, 20, 21, remain active.

11) The lack of research deactivates increases in yields per acre (C_{15}). Nonetheless, the increases gained in agricultural food production (C_9) continue to keep up with population growth (C_1) and are able to provide for better nutrition (C_{20}). Higher standards of health (C_{21}) are still reachable. Concepts C_i, i = 1, 9, 20, 21, are active.

12) In this stage increases in agricultural food production (C_9) are not present. Notwithstanding, better nutrition and higher standards of health (C_{20} and C_{21}) are not

immediately affected. Active concepts are thus $\mathbf{C}_i$, i = 1, 20, 21.

13) At this last stage of the cycle, continuous population growth ($\mathbf{C}_1$) generates the need for more food which the country is unable to produce, so concept $\mathbf{C}_2$ is reactivated. Also, the absence of increases in agricultural food production ($\mathbf{C}_9$) affects better nutrition and concept $\mathbf{C}_{20}$ is deactivated. However, the lack of good nutrition, although eroding higher standards of health ($\mathbf{C}_{21}$), still does not deactivate this concept. At this last stage, before restarting the cycle, the active concepts are $\mathbf{C}_i$, i = 1, 2, 21.

Under the structural core of causal concepts, identified in the institutional cognitive pattern, the continued growth of population will generate the cycle over and over again. But in the case of the Mexican cooperative agricultural improvement program, government investment was actively pursued.

Therefore, the analysis turns now to learning about the consequences that continued government investments in the agricultural improvement programs could have in the pattern behavior of the ICP. Given the growth in population, the Mexican government committed itself to support the increase of agricultural food production by maintaining active investments in the program during the two decades under study. Thus, the initial state vector of causal activation was, in this case: $\mathbf{I} = [e_{ij}]_{1x24}$, where $e_{ij} = 1$ for i,j = 1, 23, and $e_{ij} = 0$ for i,j $\neq$

1, 23, and C_1 and C_{23} maintain the value of 1 during each iteration.

The initial state vector of causal activation, when passed through the ICP equivalent matrix, under the specified neural algorithm, produces a fixed point. It settles on a fixed attractor and, in that sense, reaches a fixed stable vector in the dynamic system. That is, after the causal activation vector has worked through the causal core of the institutional cognitive pattern, the continuous activation of other concepts occurs in unison with those initial concepts activated in the above state vector of causal activation. They remain active as long as these initial concepts (C_1 and C_{23}) are also active (see Appendix D).

Thus, the importance of government action is established. Population continues to grow (C_1) and the government must be willing, and capable, of maintaining its investments (C_{23}) in the agricultural food production improvement programs. The activity of these, population and government investments (C_1 and C_{23}), motivates and produces the continuous development of more agricultural land (C_8) through investments in irrigation projects (C_{14}). Also, the government invests in the training of local scientists (C_{13}) which brings, as a result, continued research and technologies in soil improvement (C_{16}), genetics and breeding (C_{17}) and plant protection (C_{18}). The continued research makes it possible to maintain increases in yields per acre (C_{15}) which translates to increases in agricultural food

production (C_9). More food guarantees better nutrition (C_{20}) and, together with investments in health programs (C_{22}), results in higher standards of health (C_{21}).

Therefore, in this second case, the behavior of the ICP consists of one stage or a fixed stable vector in the dynamic system, as compared with the previous limit cycle when government investment was absent. Now the following concepts remain continuously active C_i, i = 1, 8, 9, 13, 14, 15, 16, 17, 18, 20, 21, 22, 23. The country is able to produce the needed food, thus providing for better nutrition and higher standards of health to its growing population. This is accomplished by the government's continuous investments in research, which are capable of increasing yields per acre, and by bringing more land into cultivation. In this stable stage, the research capability acquired by the country has no need for more outside technical assistance. Therefore, The Foundation (C_{10}) ceases to be active and the participation of U.S. agricultural scientists (C_{12}) linked to The Foundation, also ceases.

A Reality Check[3]

"What was accomplished in Mexico's agriculture in the twenty years (1943 - 1963) of cooperation between the Mexican government and The Rockefeller Foundation?" "How does inferencing forward through the institutional cognitive

---

[3] This section draws on the results of the cooperative programs reported by E. C. Stakman, R. Bradfield and P. C. Mangelsdorf (1967).

pattern, in the context of increasing food production in Mexico as a problem and opportunity domain, match the available evidence through time?"

Population grew in Mexico. In 1963 there were 15 million more people than in 1943. The total for 1963 was 35 million people. The population increase came close to 75% for the twenty years.

The Mexican government's continuous support for the agricultural improvement programs came through the Ministry of Agriculture. In 1943 the Office of Special Studies was created within the Ministry of Agriculture with total autonomy and responsibility over the agricultural research programs. The aim was specific and clear. The immediate objective was to increase the production of the three basic foods in Mexico (corn, wheat, and beans) as quickly and economically as possible by the simplest and most practical means. At its peak the Office of Special Studies contained 21 U.S. scientists working in close collaboration with 100 Mexican associates. By January 1961 the functions of the Office of Special Studies were transferred to a recently created National Institute of Agricultural Research (INIA). The official responsibilities for agricultural research had been entrusted to INIA and the Office of Special Studies ceased to exist.

In twenty years the Office of Special Studies was "a powerful instrument in enabling Mexico to become independent in respect of basic food supplies, and in respect of the basic

need for scientists to assure future food supplies" (E. C. Stakman, R. Bradfield, and P. C. Mangelsdorf, 1967, p. 15).

The increases in agricultural productivity, measured in bushels per acre, driven by the research of the Office of Special Studies, were remarkable for the three basic food crops (corn, wheat and beans) of the Mexican diet (Table 4.2). In a relative short time Mexico became self sufficient in the food crops that were important to the diet of the great majority of her inhabitants.

Table 4.2 Mexico's improvement in agricultural productivity (bu/acre).

	1943	1963
Population (in million)	19.7	35.0
Corn Average Yield (bu/acre)	8.0	14.0
Wheat Average Yield (bu/acre)	11.5	34.0
Beans Average Yield (bu/acre)	3.0	7.0

Source: E. C. Stakman, R. Bradfield, and P. C. Mangelsdorf, 1967.

The Rockefeller Foundation assisted in replicating the successful Mexican experience to other Latin American countries. The institutional cognitive pattern was shared and extended to Colombia, Chile and Ecuador. The organizational framework also followed suit, both with the Office of Special

Studies and, later, the National Research Institutes. In reality, practically all of the Central and Latin American countries wanted to do as well as Mexico in increasing food production. It was a powerful image that shaped the way research was to be done in these countries. The basic philosophy was well established: "Science can show society what to do technologically, but society must enable science and technology to function and must contrive to distribute their contributions fairly among its members" (E. C. Stakman, R. Bradfield, and P. C. Mangelsdorf, 1967, p. 301).

By the end of the twenty year period the expansion of the Mexican pattern, via the internationalization of its agricultural improvement programs, gave rise to a new organizational vehicle: the international research center. The International Rice Research Institute (IRRI) opened early in 1962 in The Philippines, starting a new era of research with the explicit purpose of achieving regional and global outreach. In the following year a cooperative agreement with the Mexican government established the International Center for Corn and Wheat Improvement (CIMMYT). During the next fifteen years more international research centers formed and were brought into an international research system under the Consultative Group on International Agricultural Research (CGIAR). The idea was that these international agricultural research centers (IARCs) would work themselves out of their main research job by eventually transferring their

responsibilities to the growing National Agricultural Research Systems (NARS). Thus, the emphasis by the international agencies and country donors on becoming just a consultative group was a clear indication of its temporary nature (W. C. Baum, 1986).

The above transition from a international agricultural research system to the national research system did not happen as desired. The mid-part of 1960s saw the beginning of a shift in development priorities in developing countries, away from investments in agriculture and towards industrialization. The above trend continued during the 1970s and its effects are still felt in many countries. Also, the gap between the research results obtained by the IARCs in their experimental plots and those that were obtained with their genetic material by the National Agricultural Research Systems was widening. To reverse this problem, in the opinion of the IARCs and the Consultative Group, required the strengthening of the NARS. For this purpose the International Service for National Agricultural Research (ISNAR) was created as a technical assistance center.

In the context of the identified institutional cognitive pattern, when government investment in agricultural improvement programs was continuously pursued, a stable state of agricultural food production capable of keeping up with the growth of population, was present. If investing in agricultural research ceases to be a country's governmental

priority, what happens with this stabilized state of the dynamic research and agricultural development system? To specify the absence of government investment, $\mathbf{C}_{23}$ is deactivated in the fixed stable vector that resulted when government investment continuously supported the agricultural improvement programs. The fixed stable vector with $\mathbf{C}_{23}$ absent becomes the initial state vector of causal activation, passing through the structural core of causal assertions in the ICP. The initial state vector of causal activation is now: $\mathbf{C}_i$, i = 1, 8, 9, 13, 14, 15, 16, 17, 18, 20, 21, 22.

As a result of the lack of government investment in agricultural improvement programs, a 13 stage limit cycle returns as a pattern behavior for the ICP (see Appendix E). The lack of government investments ($\mathbf{C}_{23}$) produces a cessation in the training of national scientists ($\mathbf{C}_{13}$) and there is no generation of new technologies ($\mathbf{C}_{16}$, $\mathbf{C}_{17}$ and $\mathbf{C}_{18}$ are deactivated). Also, with no governmental investment, irrigation projects are discontinued ($\mathbf{C}_{14}$), no more agricultural lands become available ($\mathbf{C}_8$) and health programs ($\mathbf{C}_{22}$) also decline. Still increases in yields per acre ($\mathbf{C}_{15}$) remain active at this first stage of the present limit cycle and support increases in agricultural food production ($\mathbf{C}_9$). Better nutrition ($\mathbf{C}_{20}$) and higher standards of health ($\mathbf{C}_{21}$) still remain unaffected. At this initial stage concepts $\mathbf{C}_i$, i = 1, 9, 15, 20, 21, 22, are active.

The above first stage of this limit cycle turns out to be equal to stage number 10 of the limit cycle behavior of the ICP when population was growing without continuous government investment. The next 12 steps of this limit cycle are sequentially equal to those of the previous limit cycle. Stopping government investment reverses the behavior of the ICP to the one where government investments were not continuously pursued. In reality, there is one important difference; the dependency on food oriented agricultural research and the training of local scientists shifted, in a sense, from the under funded national institutes of agricultural research (the INIAs that followed the offices of special studies) to the now operational and adequately funded international agricultural research centers, the IARCs. The Rockefeller Foundation by the close of the twenty year period was no longer pursuing direct involvement with food oriented agricultural research in the developing countries. The Foundation did continue to support the NARS through contributions to the system of IARCs and through fellowship programs to train developing country scientists.

Each of the above applications indicates a highly consistent behavior for the ICP's core of causal concepts. Things appear to happen in the behavior of the ICP in the way they should. Given the problem and opportunity domain, bounded by a proven applied agricultural science focus, there are no surprises in the purported causalities. Values, beliefs,

knowledge and experience, tested through time, consolidate into a solid institutional cognitive pattern. The pattern behavior analysis of this ICP shows, for example, what happens when there is a lack of national food oriented agricultural research working to increase a country's food production. When governments do not invest (adequately and consistently) in their national agricultural research systems, the pattern behavior analysis of the ICP shows, as a result, an intermittent dependency on outside technical assistance to satisfy the country's agricultural research needs.

Nevertheless, in the periphery of the ICP's core of causal concepts certain events, at the end of the studied period, were evaluated and became bothersome. Concerns were raised by the scientists themselves:

> Corn and beans have not matched the three-fold increase in acre yields of wheat, but they are handicapped. Wheat is grown mostly by skilled farmers and almost entirely under irrigation. Corn and beans, on the other hand, are grown by all kinds of farmers, on all kinds of land, mostly without irrigation, and therefore often victimized by the vagaries of Mexican rainfall. Nevertheless, acre yields are approaching twice those of 20 years ago, and surely that is progress, even if not so revolutionary as some revolutionaries may wish. (E. C. Stakman, R. Bradfield, and P. C. Mangelsdorf, 1967, p. 7)

In reference to the spread in the use of the new seeds in Mexico it was reported as follows:

> Hybrid corn, however, which has been available for 18 years, has come to occupy only 14 percent of Mexico's corn acreage, and this is a real disappointment when compared with progress in the United States. There, in a similar, 18 year period, from 1933 to 1951, hybrid corn expanded to 80

> percent of the total acreage, including even the smallest farms. But in the United States progress was stimulated by the competition of private enterprise. For various reasons the Mexican government preferred to maintain complete control of the production and distribution of improved seed, and private enterprise was excluded. One consequence has been that once hybrid corn became established on the large farms managed by the more progressive farmers, the expansion slowed down. Hybrid seed is not yet reaching the small farmer in Mexico in substantial amounts, and it probably never will until private enterprise is allowed a part of the promotion. (E. C. Stakman, R. Bradfield, and P. C. Mangelsdorf, 1967, p. 71)

Closing the widening gap between the food being produced and the food needed for people not to go hungry was the principal aim of the agricultural research that started in the 1940s. The concept was simple: if research could generate technologies that farmers would use to increase food production, people would not go hungry. Simple and powerful, the concept created an unparalleled international research effort that brought the highest unprecedented increases in the main food crops' yields in a relatively short period of time. But people did go hungry. Availability of food did not translate into consumption of food by the poor. The international agencies and donors expressed their concern that the funds they provided should go into research aimed at improving society's poor (W. C. Baum, 1986).

All of the above concepts eventually found their way into the structural core of the ICP. As new causal concepts, or revision of the previous ones, started to emerge and became more widely shared by the decision making participants, the

institutional cognitive pattern began to incorporate these concepts and it changed. This occurred as the boundaries of the problem and opportunity domain, confronted by the IARCs, expanded. Therefore, institutional change is characterized in this context by a change in the institutional cognitive pattern.

Analysis of An Institutional Cognitive Pattern : A Summary

International agricultural research, with regional and global mandates, cuts across cultures, languages and national boundaries and is performed under inherent structural uncertainties. These conditions require the examination of shared patterns of causal concepts for international agricultural research as the means through which the decision making processes are integrated and guided. The empirical representation and analysis of institutional cognitive patterns is useful both in the identification of the structural shared causal core of concepts related to agricultural research, and as a participatory analytical tool to further improve the decision making process. This analysis, given the sequence-in-time nature of the investigation, follows an historical perspective.

The present analysis covers a period of approximately twenty years, beginning in 1941, and examines the origins and development of the cooperative agricultural improvement programs of the Mexican government and The Rockefeller Foundation as precursors of the Green Revolution. Further, it

considers the events that unfolded during that period until the creation of the international agricultural research centers. The data, for the period under study, are drawn from the detailed report and insightful account of the events made by the three members of the Survey Commission. Recommendations by the Commission initiated the programs and the members were actively involved as advisers to the researchers and research administrators who were responsible for the programs.

The origins of the basic concepts and causal assertions held by the decision-maker participants in the Mexican agricultural cooperative program were rooted in the successful research efforts of the State Agricultural Experiment Stations in the United States. Nevertheless, the Mexican challenge brought new concepts and causal assertions as part of the structural core held by researchers. In differing from the U.S. experience, Mexico experienced a high population growth rate causing the difference between the food needs and food production to increase. The diagnosis by the Survey Commission identified three fundamental concerns. First, better farming was to come largely from the results of experimentation within the country but there was a lack of national agricultural scientists. Second, land was available but good agricultural land was not available. Third, yields per acre were low. The strategy was designed to overcome these challenges.

The Mexican government responded to the growing food deficit and the need for more agricultural land by investing

in irrigation projects, by requesting assistance from The Rockefeller Foundation and by investing in the training of local agricultural scientists.

A total of 24 concepts and an equal number of causal assertions were identified as the structural core of the institutional cognitive pattern. The ICP depicts the causal assertions held by the decision making participants in the cooperative agricultural research programs in Mexico with the active participation of The Rockefeller Foundation. In time this institutional cognitive pattern was shared by other Latin American countries where The Foundation provided similar assistance during the two decades under study.

An algorithm from the field of neural network systems analysis was utilized for the pattern behavior analysis of the institutional cognitive pattern. In a neural network paradigm, neurons, concepts of the present study , are activated or deactivated through a causal synaptic process. In this analysis that process is represented by causal assertions in a connective matrix. In correspondence with the neural network, a threshold value for the activation or deactivation of concepts was also specified. Causal assertions were assumed to have maximum effect into the connected concepts of the ICP. The deterministic nature of the threshold operation made it possible for the pattern of behavior to converge into a limit cycle or into a stable stage.

In the first part of the analysis, the results obtained from the institutional cognitive pattern via the application of the neural algorithm indicated that with a continuous growth in population, the structural core of causal concepts, the identified ICP, behaves as a 13 stage limit cycle. The stages of the cycle showed a progressive activation and deactivation of the causally connected concepts leading to and from viable agricultural research analogous to a real sequence. The lack of scientific activity stops the generation of technologies in the next stage of the cycle which in turn brings down increases in yields per acre as the cycle progresses. Also, the continuous growth of population, as expected, generates the cycle over and over again, as long as the prevailing concepts and their causal assertions continue to exist in reality and as part of the ICP. The repetition of the cycle comes from the fact that the structural causal core of the institutional cognitive pattern remains unchanged during the time period under study, and concepts activate and deactivate in accordance with the permanency of the initial conditions that generate this recurrent pattern behavior.

Next the analysis incorporated the fact that the Mexican government, during the twenty years covered in this study, continuously invested in the agricultural improvement programs. Given this governmental commitment, the simultaneous and continuous presence of growth in population and government investments to increase food production generates a pattern

behavior of the ICP that culminates in a stable stage. At this stable stage, continuous government investments bring more agricultural land into production and create a cadre of capable national scientists actively delivering research that increases food production to keep pace with the growth in population. Mexico, at the end of twenty years of continuous effort and assistance by The Rockefeller Foundation was independent with respect to basic food supplies and in respect to the need for scientists to insure future food supplies.

The success of the Mexican experience extended the ICP, together with the organizational arrangements, to other Latin American countries which assisted also by The Rockefeller Foundation to improve their food production.

During the mid 1960s and during the 1970s Latin America governments shifted priorities from investments in agricultural improvements to industrialization. Accordingly, this analysis was adjusted to focus on changes in the above stable stage brought about by the deactivation of government investments as support to increased agricultural production, notwithstanding the continuous increase in population. The results show that the pattern behavior of the ICP reverses from the stable stage to a limit cycle of 13 stages. The initial vector of this cycle happens to be equal to one of the stages of the first limit cycle when population growth was the only active concept. The rest of the stages are sequentially equal to those stages that form part of the first limit cycle.

Once again, the country depends on outside technical assistance for research to increase agricultural production in order to close its food deficit. But by this time The Rockefeller Foundation ceases to be directly involved in food agricultural research and, in a sense, the newly created international agricultural research centers step in as its replacement, in reality and as a causal concept in the ICP.

The simple core of causal assertions of the ICP was undeniably powerful and successful in dealing with the problem and opportunity domain of increasing food production in a hungry nation. Nevertheless, at the end of twenty years certain concepts were beginning to be reevaluated and others revised. A concern was the lack of equal success in increasing the yields of other researched basic food crops and also, among several difficulties, a failure of produced and improved seeds to reach the small farmers. Later, a growing concern emerged that, notwithstanding increases in a country's food production, a sizeable number of her people could still remain hungry. This situation led to the recognition of the difference between the food produced and food availability to feed the poor. Eventually, these peripheral concepts to the existing ICP found their way into its core of causal assertions at the same time that the problem and opportunity domain, confronted by the IARCs, expanded. It is in this context that institutional change is characterized as a change in the institutional cognitive pattern.

CHAPTER 5
CONCLUSIONS AND RECOMMENDATIONS

> We can only say that there are elements in the image which are capable of organizing the life and activity of the individual. It is these organizing elements which constitute faith: the faith of the experimental scientist in his research method; the faith of the believer in his God, the faith of the crusader in his cause...All these are organizing images...Where life is disorganized, where there is dissatisfaction and discontent with the processes of existing faith, then there is search for change. Where a faith is discovered that has this organizing power, it is likely to grow and to prosper.
>
> (K. E. Boulding, 1977, p. 172)

This dissertation research set out to explore the institutional dimension of change in international agricultural research, specifically the international agricultural research that originated in the Mexican agricultural improvement programs. These programs aimed at increasing the production in basic food crops. Later, through the success of these programs and their subsequent internationalization, a foundation was provided for the creation of the system of international agricultural research centers (IARCs) with regional and global mandates, under the Consultative Group on International Agricultural Research (CGIAR). The period covered corresponds to twenty years, from the early 1940s through the 1960s.

Workable Definitions for Institutions and Organizations

Institutions are usually placed in the center stage of a country's development controversies. They are blamed or praised in accordance with whether they hinder or assist the process of technological change, a condition considered by many to be the engine of development. Little research, if any, goes into the institutional setting in which the actual generation of the technology takes place. Moreover, the every day usage of the word institutions seems to exist under the assumption that it is a concept that everyone understands but is hard-pressed to define. The fact is that the concept of institutions embraces an inordinate number of meanings, not the least is its presumed interchangeability with the concept of organizations as a second usage for the word institutions. This confusion can be simply verified in any good dictionary. Beyond these ambiguities, institutions are also analytically difficult to evaluate.

This research first confronts the need to define institutions and organizations such that a search into the institutional dimension of change in international agricultural research is permitted. The desire is to make institutions analytically differentiable from organizations. In other words, a goal is to differentiate the agricultural research institutional setting from the organizations performing the research. Modern philosophical foundations of institutions and earlier definitions given by the pioneer

thinkers on institutional economics provide the background and the basic elements to develop a workable definition. Institutions were defined, in general, as embodying broad patterns of the ways in which society perceives its needs and aspirations and agrees among its members about how to meet these needs and aspirations. This definition of institutions established, first, an institutional cognitive dimension: the perception of a shared image of causal relationships of ideas, concepts, and, from past experiences and knowledge, a sense of what is possible, in a problem and opportunity domain. And a second dimension, emanating from the first, constituted by a complex of normative systems, formal and informal, created or evolving over time, as principles for action: how the perceived needs and aspirations are to be addressed. Thus, the study of the institutional setting where international agricultural research performs involves the conceptualization of the causal assertions that guide and drive decisions given the path-breaking nature of discovery in agricultural research. In this context, the study focuses primarily on the cognitive dimension of institutions.

Moreover, for the purposes of this research, agricultural research organizations, whether national or international, include a specific set of research capabilities allowing researchers to perform in a given institutional environment. This environment sanctions the use the research organization and researchers make of society's resources and how they

derive their legitimacy from the institutional setting from which they emerge. Mexico, and other countries, during the time period under study, confronted (as many countries do today) an increasing food production deficit, a growing population and hungry people. Rapid increases in food production were and are needed. Applied agricultural research was an urgent necessity and agricultural research organizations grew to satisfy this need. Over time, these agricultural research organizations, managed for actions to modify other institutional settings, were hampered from contributing to increases in food production that were to be aimed at satisfying food needs of people.

Specification of an Institutional Cognitive Pattern

Institutional cognition results in the representation of needs, aspirations and knowledge through the selection and formulation of shared concepts, notions or ideas and identification of causal assertions in the process of specifying a problem and opportunity domain. Thus, international agricultural research was conceived in response to a socio-physical problem (increase food production) and an opportunity (the feasibility of doing it) as a specified domain resulting from a shared core of causal concepts and relations. The institutional cognitive dimension of the decision making framework held by the participants in the agricultural improvement programs in Mexico, and later in the internationalization of the programs, are represented

analytically in this research by an institutional cognitive pattern (ICP), with a core of 24 shared concepts and causal assertions.

The Institutional Dimension of Change: An Analytical Perspective

The institutional dimension of change in international agricultural research was introduced through the notion of a core and a periphery of causal concepts. The core, represented by the 24 shared causal concepts in the ICP, includes those relationships considered to be most valuable, meaningful and useful by the decision making participants. That is, this shared knowledge assisted the participants in the agricultural improvement programs in their search for solutions to the problem of increasing food production and in exploring opportunities to obtain the desired production increases.

Pattern Behavior Analysis

The analysis of the pattern behavior of the ICP showed a remarkable consistency in portraying, through the dynamics of the core of causal concepts, two pervasive results: 1) The relentless challenge and consequences for a country's food deficit abatement caused by a continuous growth in population increases the food sufficiency deficit; and 2) A permanent government commitment to investment in agricultural programs to improve food production when present both satisfies the need for more food and creates a cadre of capable national scientists, or when absent allows the food deficit to increase

and the country to depend on outside technical assistance for agricultural research on food production.

Changes in the Pattern

At the time when the first international agricultural research centers became operational (early 1960s to late 1970s) the occurrence of several perceptions was a cause for concern: 1) increases in yields per acre in farmers' fields were not the same for all the researched food crops (corn, wheat and beans) as those expected from the experimental results in the research plots, 2) improved hybrid corn seed was not reaching all the corn growing farmers, and, 3) the realization that increasing food production was a necessary but not a sufficient condition to feed a growing population and reduce hunger, particularly for low income people. Many Latin American governments, mistakenly for political reasons, held official prices low for domestic produced basic foods and subsidized food imports to reduce the subsequent deficit in food production. These growing concerns brought also the recognition of causal concepts outside those conforming to the ICP. It became necessary for the decision making participants in the system of international agricultural research centers to reevaluate some of the original concepts and their causal assertions, recognize new causal concepts and expand the problem and opportunity domain.

Institutional Change: A Proposition from an Institutional Cognitive Pattern Perspective

The studied events occurred over a period of twenty years, from the inception in Mexico of the cooperative agricultural improvement programs to their internationalization. From this sequence and the creation of the first international agricultural research centers, the pattern behavior of the identified ICP provides a similar match. In this context, the results help establish the institutional cognitive pattern as a viable conceptualization of the institutional dimension of change in international agricultural research. The use of a neural network systems paradigm allowed the application of a neural network algorithm to guide analysis of a behavior pattern expressed as the dynamic core of causal assertions specified in the ICP.

The periphery to this core (perceived from ongoing experiences, internally or in the boundaries of the defined socio-physical problem and opportunity domain) was viewed as a source for revision of causal assertions or for new causal concepts and causal structures as alternatives to the established core. In this context, the institutional decision framework is considered to be a construct of an interacting core of shared causal concepts from a set of institutions providing the means for formulating decisions to act. The proposition is that institutional change then becomes a collective response to alterations in the results of sharing,

selecting and reformulating values, beliefs, needs, aspirations, knowledge and the sense of what is possible.

It is important to emphasize the difference between the dynamics of change inside the structural causal core of an ICP (the activation and the deactivation of causal concepts as causality flows through the structure), and the dynamics of change in the structure of the core (changes in the ICP). It is in this last sense that the dynamics of institutional change can be understood in this study.

What Was Accomplished and What Still Needs to Be Studied

This research, given the time limitations and the availability of data, was able to analyze the dynamics of the structural core of the identified ICP, whose life-span reached beyond the twenty year period under study. It explored briefly the appearance of signals that would eventually, as a matter of fact in the subsequent decade, accommodate the ICP structure in order to incorporate new causal assertions. This task occurred principally by revising existing causal concepts as the decision making participants in international agricultural research confronted the fact that the results of their research alone did not satisfy the food needs of the growing numbers of hungry people.

The decade of the 1990s presents a different challenge for the international agricultural research centers (IARCs) under the Consultative Group on International Agricultural Research (CGIAR). The source of institutional change comes

from the attempt to merge the ICPs of two different problem and opportunity domains. The domain of international agricultural research whose aim has been (and many less developed countries expect it to continue to be its principal aim) to contribute to increases food production, and the domain of international environmental research whose aim is to prevent and protect the decline of the environment. Both sets of decision making participants are contrasting their structural cores of causal assertions. Some already are incorporating causal assertions from the other as they struggle and hope to reach common ground in a still to be defined sustainable development domain.

Contributions and Critique

The need to grasp analytically the institutional dimension of change in international agricultural research was a powerful incentive for this study. The problem-driven nature of this research provided challenging and fertile ground for specifying and testing innovative concepts and methodologies directed toward institutional analysis. In this context, the study expects to contribute to the ongoing scholarly conversation about institutions and institutional change as facilitators of institutional development. It also expects to provide a convenient framework for organizations and policy makers to incorporate explicitly the institutional dimension in their decision-making and strategic planning. To properly assess the potential conceptual and applied contributions of

the research, there is a need to make explicit the strengths and weakness of the analytical method.

Insights Towards Patterns-Rules Integration

An important historical and conceptual context for this research spans over fifty years based in the work by Veblen and Commons. Introduction of the pattern model approach to analysis of international agricultural research and related institutions provides an important extension to the early work and a potential for an improved dialog about conceptual opportunities and analytical applications. Something is explained, according to the pattern model, "when it is so related to a set of other elements that together they constitute a unified system" (A. Kaplan, 1964, p. 333). Veblen's perception of institutions as "prevalent habits of thought with respect to particular relations of the individual and of the community" (T. Veblen, 1943, p. 190) stressed the cognitive process embedded in institutions. In this study it has been argued that the cognitive element of institutions, is the primal one from which rules (Commons' collective action) are derived and supported. For the purpose and objectives of this research an institutional cognitive pattern, represented by a shared core of causal concepts, provides the necessary conceptual framework for analysis. Nevertheless, a richer approach could bring together the institutional cognitive pattern with the ensuing rules and norms that, in the words of

Commons, are in "control, liberation, and expansion of individual action." (J. R. Commons, 1934, p. 902).

The Methodology Revisited

Evaluation of the methodology used in this study and the contribution it makes involves different modes of critique. First, there is the valid concern about the assumption that the expressed concepts in documentary data, written as an historical assessment in this case, were the guiding concepts and assertions for action at the time of the events as opposed to an intended impact on the reader at the time of writing. As a source of data for this study, Stakman, Bradfield and Mangelsdorf, all experienced scientists of high standing, did the recording in as simple and nontechnical way as was compatible with scientific accuracy. Also, the main concepts and their causal assertions were part of their U.S. experience. Similar causal assertions had been successfully applied to programs in the development of U.S. agriculture. In addition, those scientists chose to record the principles, the basic objectives and the most significant procedures utilized in their research together with results of the operational research and development programs. As members of the initial survey commission, they provided to their writings an exceptional background of information on the state of Mexican agriculture. To be sure, however, the representation of a valid institutional cognitive pattern depends critically on the quality of the documentary data, the objectives of the

survey and/or expert panel, and on the reliability of the recorder(s) and the encoder.

Second, it is assumed that causality is a notion imbedded in human nature. But, there are other important modes of thought for which causality is not part of the structure of relations. As Georgescu-Roegen points out, "the brute fact is that in contrast to Greek civilization the ancient cultures of Asia never developed the idea of causality" (N. Georgescu-Roegen, 1971, p. 31). Notwithstanding, the causality assumption in this study is a reasonable one from the perspective of causality held by Western scientists applying agricultural science to help solve Mexico's food production deficit. Also, causality has been assumed in this study in its most straightforward fashion. When effects occur they occur at maximum strength and in a determined direction.

Third, it needs to be stressed that an institutional cognitive pattern is a shared core of selected and formulated causal concepts in the context of a specific problem and opportunity domain. Causal concepts are selected and formulated through experience, knowledge and a sense of what is possible, by those who share them. This is because those people or entities consider the shared concepts to be more valuable, meaningful and useful in terms of the specific problem and opportunity domain. An institutional cognitive pattern, however, is not reality, nor does it pretend to substitute for, or represent, reality. It is like a mental map

selecting and recalling certain useful features, an image or even a memory of a road travelled, but it is not the road nor the landscape through which people travel. That is, when questions of the "What if?" variety are asked in an institutional cognitive pattern context, the answers come from the structure of the pattern not from the socio-physical world. Institutional cognitive patterns pretend to represent human mind constructs that allow a group of individuals, a community or society to deal with the socio-physical world. While this approach can be effective and efficient, it may not necessarily be accurate. Ultimately, the contribution of an institutional cognitive pattern rests in the externalization of the shared causality structure.

Fourth, the issue of quantifying concepts, in a sense, follows from the preceding discussion. The concepts as variables have the potential to be measured or to use existing data to quantify them and, thereby, expect to improve their accuracy. Contained within the context of an institutional cognitive pattern is what could be termed, lower and upper bounds to quantification. An institutional cognitive pattern benefits from, but does not necessarily thrive on, quantification of the concepts for their externalization. Nor do all causal concepts in an institutional cognitive pattern need to be quantifiable. The question, then, becomes one of balance. How far should the quantification of causality be built into the structure of an institutional cognitive

pattern? More specifically, when will numeric information cease to be shared and used, effectively and efficiently, as part of the core of causal concepts, held by a group of individuals, a community or society in the context of a specific problem and opportunity domain? There are, in this sense, diminishing returns in the quantifying process depending upon the particular problem and opportunity domain. Certain causal assertions function very well without full information. For example, the assertion that when a red light is on cars should stop to avoid accidents, does not require drivers to know the number of cars that stop at traffic lights for the causality to be shared among them. On the other hand, some causal assertions seem to require a minimum of quantification before causality is established or recognized. For example, many people died of smoke related lung cancer before cigarettes were considered hazardous to people's health.

Fifth, the use of graph theory is not foreign to the field of institutional economics (P. Bush, 1983). Graph theory in network design and analysis is more familiar to mathematicians and engineers. An institutional cognitive pattern belongs to a network set of signed digraphs with feedback. The signed digraph gives a structural model to the institutional cognitive pattern under study, presenting clearly the interactions, direction and sign, and relationships among the concepts of the pattern. In the

present study the structure of the model is simple and deterministic and no attempt is made to explore various graph parameters. The feedback permits an institutional cognitive pattern to be characterized as a dynamic system and allows pattern behavior analysis through forward inference.

Sixth, the search for mathematical precision and a dynamic scenario for pattern analysis have taken institutional economists into the realm of system dynamics, deterministic chaos and self-organizing systems (M. Radzicki, 1988, 1990). In this study, the neural network system paradigm (the activation and deactivation of concepts as a simile to the activation and deactivation of neurons) provides the basis for the use of a neural algorithm for behavior analysis of an institutional cognitive pattern. The convergence of the dynamic system is possible, either into a limit cycle or a fixed stable vector, by selecting a deterministic threshold and the assumption of maximum concept activation and maximum concept effect. Departure from these specifications could generate a chaotic result.

Recommended Future Research

For future research related to the emergence and change of the international agricultural research system, four areas can be differentiated. The first area corresponds to the identification of the institutional cognitive patterns in two distinctive and subsequent time periods to the one covered in this study. The second area corresponds to further development

of the methodology. A third, still at a very early stage, is to pursue the dynamic integration and analysis of institutional cognitive patterns that exist and behave simultaneously (as a characterization of sets of institutions), and provide dynamic decision making frameworks for action. The fourth would investigate ways to utilize institutional cognitive pattern mapping as an interactive tool for analysis and planning by managers of major agricultural research organizations such as the IARCs and NARS. A brief background for each future research area is presented below.

Extending the Analysis Over Time

The base period, from the early 1940s to the late 1960s, was a time when new paths opened for conducting agricultural research in countries with growing food deficits. Even thou the problem initiating this research is concerned with contemporary institutional pressures on international agricultural research, only the base period received complete attention in the present research. The pattern behavior mapping process and analysis deals specifically with perceptions and causal concepts prevailing during these two decades. This basis is necessary for study of subsequent periods to present and use of the analytical approach as an ex ante tool for strategic anticipation of future institutional pressures for change.

A second and subsequent period, as proposed in this study, represents the evaluation of established causal

assertions from the first period, the exploration of new ones, and the incorporation of some of these new causal concepts into the institutional cognitive pattern thereby adapting the structural core of causal assertions to new perceived realities. The period from the early 1970s to the late 1980s is not only characterized by the appearance of the CGIAR as a system of international agricultural research centers and the creation of new IARCs, but also by the late 1970s and early 1980s, the first serious effort was made to measure the impact of the system on the agriculture of the countries the system aimed to serve. Evaluation of the impact experienced a need for an integrated reality check ranging from the impact on production in farmers' fields to the impact on consumption by the people most in need of food. The question was a fundamental one: How extensive (how green) was the revolution?

A third period corresponds to the present decade of the 1990s and beyond. It is characterized by a need to merge productivity growth with environmental concerns, what is termed the search for sustainable development. In this case, the process of identification of the ICP differs from that of the second period. This third period does not possess a clearly discernable ICP with sustainable development as a well defined problem and opportunity domain. Presently agricultural research is witnessing the struggling emergence of what can be called the early shapes of a new pattern. Hopefully, this process of awareness and confrontation will lead to productive

integration and provide for continued agricultural research. In this case, the research on institutions will consist of identifying the present institutional cognitive patterns and attempting to merge the two major ICPs. Then the following task will be to evaluate the pattern behavior of the alternative ICPs. Such work must emerge from a constructive confrontation among the decision making participants in the international agricultural research and in the international environmental research camps. This participatory interaction could become the basis for identifying and refocusing causal concepts in alternative patterns that help anticipate the force of institutional changes.

Emerging Methodology

Future research could relax some of the assumptions made in the neural algorithm utilized in this research in order to increase the power of the analysis. First, the strength of the causal assertions, the edges in the connective matrix of causal concepts, can be varied from its assumed maximum effect. The strength of the edges could take on any value on the interval [-1, 1]. By allowing the strength to vary, the thresholding operation will permit the study of alternative pattern behaviors in accordance with different threshold levels. Second, concepts also vary through time. The conceptualization of concepts as variables could allow the use of numeric data to trace their rate of change and their effects on the behavior of the pattern.

Decision Frameworks

Although the core of causal concepts in an institutional cognitive pattern emerges from a problem and opportunity domain, guiding and driving the decision making of participants in that domain, decision making frameworks will not necessarily emerge from a single institutional cognitive pattern. It is reasonable to expect that certain decisions are made under decision making frameworks that are a composite of two or more institutional cognitive patterns. The decision making framework for composite or interacting institutional cognitive patterns needs to be researched, both from a conceptual to applied perspective, as methods for institutional analysis in general, and in application to the overall agricultural research and sustainability agenda.

Participatory Ex ante Evaluation

Pattern behavior mapping as a participatory management or planning tool holds potential for keeping agricultural research viable within the context of the rapidly changing institutional cognitive patterns that now influence food security and resource sustainability. Research to determine the feasibility of developing such a tool might consist of a pilot group of institutional leaders working together periodically over an extended time span in developing and analyzing alternative ICPs. Much of the value of such work would result from the interactive process. Results of the work, however, might include patterns for use in strategic

planning. A purpose would be to keep ill advised major shifts in organizations and structures from destroying the central purposes of these organizations as could happen if institutional forces are not incorporated into the analysis and evaluation of agricultural research.

GLOSSARY

ACIAR: The Australian Centre for International Agricultural Research, a research organization created by the Australian government.

Causal Assertions: the specification of causality in its direction, magnitude and sign between two or more concepts.

Causal Concepts: concepts related to each other such as--in a cause-effect relationship varying in a concomitant fashion.

CGIAR: The Consultative Group on International Agricultural Research, an informal association of 40 public and private sector donors that supports a network of 18 international agricultural research centers. The Group was established in 1971.

Concepts: the representation of statements, facts, knowledge, conditions subject to variation.

Core: those causal concepts considered more valuable, meaningful and useful by the decision making participants in a specified problem and opportunity domain.

Fixed stable vector: a dynamic equilibrium state of one stage.

Fuzzy Systems: a set of conditional rules (relations) of the form if-then that transforms inputs into outputs.

IARCs: the international agricultural research centers with headquarters throughout the world are supported by the CGIAR and are an important part of a global agricultural research system.

INIAs: the national agricultural research institutes were an outgrowth of the offices of special studies and replace them in the research and management of the agricultural improvement programs in the Latin American countries.

Initial state vector: the initial conditions for a dynamic system.
Initial concepts: the first concept or concepts to be activated and maintained active through the neural algorithm.

Institutional Cognitive Pattern: the spatial or matrix representation of causal concepts and their corresponding causal assertions.

Multivalued logic: the logic treatment of vagueness or the logic acceptance of degrees in set membership.

Limit cycle: is a periodic equilibrium state in a dynamic system where the stages of the cycle repeat again and again.

NARS: the system of agricultural research organizations in a country, usually of the public sector, referred to as the National Agricultural Research System.

Neural algorithm: a mathematical procedure for the pattern behavior analysis of a neural network.

Neural network: a nonlinear dynamic system that represent neurons and synapses transforming incoming signals (inputs) into outgoing signals (outputs).

NGOs: the non-governmental organizations, differentiates non-profit organizations involved in various fields from organizations that belong to the public sector.

Periphery: those causal concepts whose existence is ignored or can be acknowledge but not incorporated into the core by the decision making participants in an specified problem and opportunity domain.

Structural core: the concepts and their causal internal arrangement in an institutional cognitive pattern.

Stage: a vector representation of a step in a cycle.

TAC: the Technical Advisory Committee to the CGIAR composed of international experts from developed and developing countries.

UNEP: the United Nations Environmental Program.

APPENDIX A
LIST OF CAUSAL CONCEPTS

C_1 = High percentage of population growth.

C_2 = Difference between food needed and food produced.

C_3 = Government requests for outside technical assistance.

C_4 = Lack of national scientists.

C_5 = Pests.

C_6 = Diseases.

C_7 = Unfavorable climate changes.

C_8 = More agricultural land.

C_9 = Increase agricultural production.

C_{10} = Rockfeller Foundation's involvement in country cooperative agricultural improvement program.

C_{11} = U.S. Land Grant colleges' successful application of science accessible to other countries.

C_{12} = Available U.S. scientists with knowledge and experience.

C_{13} = More trained local scientists.

C_{14} = Irrigation projects.

C_{15} = Increase in yields per acre.

C_{16} = Soil improvement.

C_{17} = Genetics and breeding.

C_{18} = Plant protection.

C_{19} = Lack of extension.

C_{20} = Better nutrition.

C_{21} = Higher standards of health.

C_{22} = Health programs with Rockefeller Foundation's assistance.

C_{23} = Government investment.

C_{24} = Government control of seed production.

APPENDIX B
INSTITUTIONAL COGNITIVE PATTERN EQUIVALENT MATRIX

	1	2	3	4	5	6	7	8	9	0	1	2	3	4	5	6	7	8	9	0	1	2	3	4	
1	0	1	0	0	0	0	0	0	0	0	0	0	0	0	0	0	0	0	0	0	0	0	0	0	1
2	0	0	1	0	0	0	0	0	0	0	0	0	0	0	0	0	0	0	0	0	0	0	0	0	2
3	0	0	0	0	0	0	0	0	0	1	0	0	0	0	0	0	0	0	0	0	0	0	0	0	3
4	0	0	1	0	0	0	0	0	0	0	0	0	0	0	0	0	0	0	0	0	0	0	0	0	4
5	0	0	0	0	0	0	0	0	-1	0	0	0	0	0	0	0	0	0	0	0	0	0	0	0	5
6	0	0	0	0	0	0	0	0	-1	0	0	0	0	0	0	0	0	0	0	0	0	0	0	0	6
7	0	0	0	0	0	0	0	0	-1	0	0	0	0	0	0	0	0	0	0	0	0	0	0	0	7
8	0	0	0	0	0	0	0	0	1	0	0	0	0	0	0	0	0	0	0	0	0	0	0	0	8
9	0	-1	-1	0	0	0	0	0	0	-1	0	0	0	0	0	0	0	0	0	1	0	0	0	0	9
0	0	0	0	0	0	0	0	0	0	0	0	1	1	0	0	0	0	0	0	0	0	0	0	0	0
1	0	0	0	0	0	0	0	0	0	1	0	1	0	0	0	0	0	0	0	0	0	0	0	0	1
2	0	0	0	0	0	0	0	0	0	0	0	0	1	0	0	1	1	1	-1	0	0	0	0	0	2
3	0	0	0	-1	0	0	0	0	0	0	0	0	0	0	0	1	1	1	0	0	0	0	0	0	3
4	0	0	0	0	0	0	0	1	0	0	0	0	0	0	0	0	0	0	0	0	0	0	0	0	4
5	0	0	0	0	0	0	0	-1	1	0	0	0	0	0	0	0	0	0	0	0	0	0	0	0	5
6	0	0	0	0	0	0	0	1	0	0	0	0	0	0	1	0	0	0	0	0	0	0	0	0	6
7	0	0	0	0	0	0	0	0	0	0	0	0	0	0	1	0	0	0	0	0	0	0	0	0	7
8	0	0	0	0	0	0	0	0	0	0	0	0	0	0	1	0	0	0	0	0	0	0	0	0	8
9	0	0	0	0	0	0	0	0	-1	0	0	0	0	0	0	0	0	0	0	0	0	0	0	0	9
0	0	0	0	0	0	0	0	0	0	0	0	0	0	0	0	0	0	0	0	0	1	0	0	0	0
1	1	0	0	0	0	0	0	0	0	0	0	0	0	0	0	0	0	0	0	0	0	0	0	0	1
2	0	0	0	0	0	0	0	0	0	1	0	0	0	0	0	0	0	0	0	0	1	0	0	0	2
3	0	0	0	0	0	0	0	0	0	0	0	0	1	1	0	0	0	0	-1	0	0	1	0	0	3
4	0	0	0	0	0	0	0	0	0	0	0	0	0	0	-1	0	0	0	0	0	0	0	0	0	4
	1	2	3	4	5	6	7	8	9	0	1	2	3	4	5	6	7	8	9	0	1	2	3	4	

APPENDIX C
LIMIT CYCLE FROM POPULATION GROWTH ACTIVATION

Number of matrices to be used = 1.0

Name of the matrices to be used (AllM) = M1

Weights for each matrix (Wghts') = 1.0

Starting Node = 1.0

Threshold = 0.0

Maximum number of rows (MaxNR) =24.0

Maximum number of iterations 2^MaxNR = 16777216.0

Starting weighted and not normalized
matrix L

```
 0.0  1.0  0.0  0.0  0.0  0.0  0.0  0.0  0.0  0.0  0.0  0.0  0.0
0.0  0.0
 0.0  0.0  0.0  0.0  0.0  0.0  0.0  0.0  0.0
 0.0  0.0  1.0  0.0  0.0  0.0  0.0  0.0  0.0  0.0  0.0  0.0  0.0
0.0  0.0
 0.0  0.0  0.0  0.0  0.0  0.0  0.0  0.0  0.0
 0.0  0.0  0.0  0.0  0.0  0.0  0.0  0.0  0.0  1.0  0.0  0.0  0.0
0.0  0.0
 0.0  0.0  0.0  0.0  0.0  0.0  0.0  0.0  0.0
 0.0  0.0  1.0  0.0  0.0  0.0  0.0  0.0  0.0  0.0  0.0  0.0  0.0
0.0  0.0
 0.0  0.0  0.0  0.0  0.0  0.0  0.0  0.0  0.0
 0.0  0.0  0.0  0.0  0.0  0.0  0.0  0.0 -1.0  0.0  0.0  0.0  0.0
0.0  0.0
 0.0  0.0  0.0  0.0  0.0  0.0  0.0  0.0  0.0
 0.0  0.0  0.0  0.0  0.0  0.0  0.0  0.0 -1.0  0.0  0.0  0.0  0.0
0.0  0.0
 0.0  0.0  0.0  0.0  0.0  0.0  0.0  0.0  0.0
 0.0  0.0  0.0  0.0  0.0  0.0  0.0  0.0 -1.0  0.0  0.0  0.0  0.0
0.0  0.0
 0.0  0.0  0.0  0.0  0.0  0.0  0.0  0.0  0.0
 0.0  0.0  0.0  0.0  0.0  0.0  0.0  0.0  1.0  0.0  0.0  0.0  0.0
0.0  0.0
 0.0  0.0  0.0  0.0  0.0  0.0  0.0  0.0  0.0
 0.0 -1.0 -1.0  0.0  0.0  0.0  0.0  0.0  0.0 -1.0  0.0  0.0  0.0
```

```
0.0  0.0
 0.0  0.0  0.0  0.0  1.0  0.0  0.0  0.0  0.0
 0.0  0.0  0.0  0.0  0.0  0.0  0.0  0.0  0.0  0.0  0.0  1.0  1.0
0.0  0.0
 0.0  0.0  0.0  0.0  0.0  0.0  0.0  0.0  0.0
 0.0  0.0  0.0  0.0  0.0  0.0  0.0  0.0  0.0  1.0  0.0  1.0  0.0
0.0  0.0
 0.0  0.0  0.0  0.0  0.0  0.0  0.0  0.0  0.0
 0.0  0.0  0.0  0.0  0.0  0.0  0.0  0.0  0.0  0.0  0.0  0.0  1.0
0.0  0.0
 1.0  1.0  1.0 -1.0  0.0  0.0  0.0  0.0  0.0
 0.0  0.0  0.0 -1.0  0.0  0.0  0.0  0.0  0.0  0.0  0.0  0.0  0.0
0.0  0.0
 1.0  1.0  1.0  0.0  0.0  0.0  0.0  0.0  0.0
 0.0  0.0  0.0  0.0  0.0  0.0  0.0  1.0  0.0  0.0  0.0  0.0  0.0
0.0  0.0
 0.0  0.0  0.0  0.0  0.0  0.0  0.0  0.0  0.0
 0.0  0.0  0.0  0.0  0.0  0.0  0.0 -1.0  1.0  0.0  0.0  0.0  0.0
0.0  0.0
 0.0  0.0  0.0  0.0  0.0  0.0  0.0  0.0  0.0
 0.0  0.0  0.0  0.0  0.0  0.0  0.0  1.0  0.0  0.0  0.0  0.0  0.0
0.0  1.0
 0.0  0.0  0.0  0.0  0.0  0.0  0.0  0.0  0.0
 0.0  0.0  0.0  0.0  0.0  0.0  0.0  0.0  0.0  0.0  0.0  0.0  0.0
0.0  1.0
 0.0  0.0  0.0  0.0  0.0  0.0  0.0  0.0  0.0
 0.0  0.0  0.0  0.0  0.0  0.0  0.0  0.0  0.0  0.0  0.0  0.0  0.0
0.0  1.0
 0.0  0.0  0.0  0.0  0.0  0.0  0.0  0.0  0.0
 0.0  0.0  0.0  0.0  0.0  0.0  0.0  0.0 -1.0  0.0  0.0  0.0  0.0
0.0  0.0
 0.0  0.0  0.0  0.0  0.0  0.0  0.0  0.0  0.0
 0.0  0.0  0.0  0.0  0.0  0.0  0.0  0.0  0.0  0.0  0.0  0.0  0.0
0.0  0.0
 0.0  0.0  0.0  0.0  0.0  1.0  0.0  0.0  0.0
 1.0  0.0  0.0  0.0  0.0  0.0  0.0  0.0  0.0  0.0  0.0  0.0  0.0
0.0  0.0
 0.0  0.0  0.0  0.0  0.0  0.0  0.0  0.0  0.0
 0.0  0.0  0.0  0.0  0.0  0.0  0.0  0.0  0.0  1.0  0.0  0.0  0.0
0.0  0.0
 0.0  0.0  0.0  0.0  0.0  1.0  0.0  0.0  0.0
 0.0  0.0  0.0  0.0  0.0  0.0  0.0  0.0  0.0  0.0  0.0  0.0  1.0
1.0  0.0
 0.0  0.0  0.0 -1.0  0.0  0.0  1.0  0.0  0.0
 0.0  0.0  0.0  0.0  0.0  0.0  0.0  0.0  0.0  0.0  0.0  0.0  0.0
0.0 -1.0
 0.0  0.0  0.0  0.0  0.0  0.0  0.0  0.0  0.0
```

Sum of the weights (SWghts) = 1.0

Initial vector Cn

```
 1.0  0.0  0.0  0.0  0.0  0.0  0.0  0.0  0.0  0.0  0.0  0.0  0.0
0.0  0.0
 0.0  0.0  0.0  0.0  0.0  0.0  0.0  0.0  0.0
```

The final matrix V has 24.0 columns, 15.0 rows, and the cycle starts at row 2.0

The matrix of cycles (Matcycl) is

```
 1.0  1.0  1.0  0.0  0.0  0.0  0.0  0.0  0.0  0.0  0.0  0.0  0.0
0.0  0.0
 0.0  0.0  0.0  0.0  0.0  0.0  0.0  0.0  0.0
 1.0  1.0  1.0  0.0  0.0  0.0  0.0  0.0  0.0  1.0  0.0  0.0  0.0
0.0  0.0
 0.0  0.0  0.0  0.0  0.0  0.0  0.0  0.0  0.0
 1.0  1.0  1.0  0.0  0.0  0.0  0.0  0.0  0.0  1.0  0.0  1.0  1.0
0.0  0.0
 0.0  0.0  0.0  0.0  0.0  0.0  0.0  0.0  0.0
 1.0  1.0  1.0  0.0  0.0  0.0  0.0  0.0  0.0  1.0  0.0  1.0  1.0
0.0  0.0
 1.0  1.0  1.0  0.0  0.0  0.0  0.0  0.0  0.0
 1.0  1.0  1.0  0.0  0.0  0.0  0.0  1.0  0.0  1.0  0.0  1.0  1.0
0.0  1.0
 1.0  1.0  1.0  0.0  0.0  0.0  0.0  0.0  0.0
 1.0  1.0  1.0  0.0  0.0  0.0  0.0  0.0  1.0  1.0  0.0  1.0  1.0
0.0  1.0
 1.0  1.0  1.0  0.0  0.0  0.0  0.0  0.0  0.0
 1.0  0.0  0.0  0.0  0.0  0.0  0.0  0.0  1.0  0.0  0.0  1.0  1.0
0.0  1.0
 1.0  1.0  1.0  0.0  1.0  0.0  0.0  0.0  0.0
 1.0  0.0  0.0  0.0  0.0  0.0  0.0  0.0  1.0  0.0  0.0  0.0  1.0
0.0  1.0
 1.0  1.0  1.0  0.0  1.0  1.0  0.0  0.0  0.0
 1.0  0.0  0.0  0.0  0.0  0.0  0.0  0.0  1.0  0.0  0.0  0.0  0.0
0.0  1.0
 1.0  1.0  1.0  0.0  1.0  1.0  0.0  0.0  0.0
 1.0  0.0  0.0  0.0  0.0  0.0  0.0  0.0  1.0  0.0  0.0  0.0  0.0
0.0  1.0
 0.0  0.0  0.0  0.0  1.0  1.0  0.0  0.0  0.0
 1.0  0.0  0.0  0.0  0.0  0.0  0.0  0.0  1.0  0.0  0.0  0.0  0.0
0.0  0.0
 0.0  0.0  0.0  0.0  1.0  1.0  0.0  0.0  0.0
 1.0  0.0  0.0  0.0  0.0  0.0  0.0  0.0  0.0  0.0  0.0  0.0  0.0
0.0  0.0
 0.0  0.0  0.0  0.0  1.0  1.0  0.0  0.0  0.0
 1.0  1.0  0.0  0.0  0.0  0.0  0.0  0.0  0.0  0.0  0.0  0.0  0.0
0.0  0.0
 0.0  0.0  0.0  0.0  0.0  1.0  0.0  0.0  0.0
```

APPENDIX D
FIXED STABLE VECTOR FROM POPULATION GROWTH AND GOVERNMENT INVESTMENT ACTIVATION

Number of matrices to be used = 1.0

Name of the matrices to be used (AllM) = M1

Rows of matrix M1 =24.0

Weigths for each matrix (Wghts') = 1.0

Starting Node A = 1.0 Starting Node B =23.0

Threshold = 0.0

Maximum number of iterations 2^RM1 = 16777216.0

Starting weighted and not normalized
matrix L

```
 0.0  1.0  0.0  0.0  0.0  0.0  0.0  0.0  0.0  0.0  0.0  0.0  0.0
0.0  0.0
 0.0  0.0  0.0  0.0  0.0  0.0  0.0  0.0  0.0
 0.0  0.0  1.0  0.0  0.0  0.0  0.0  0.0  0.0  0.0  0.0  0.0  0.0
0.0  0.0
 0.0  0.0  0.0  0.0  0.0  0.0  0.0  0.0  0.0
 0.0  0.0  0.0  0.0  0.0  0.0  0.0  0.0  0.0  1.0  0.0  0.0  0.0
0.0  0.0
 0.0  0.0  0.0  0.0  0.0  0.0  0.0  0.0  0.0
 0.0  0.0  1.0  0.0  0.0  0.0  0.0  0.0  0.0  0.0  0.0  0.0  0.0
0.0  0.0
 0.0  0.0  0.0  0.0  0.0  0.0  0.0  0.0  0.0
 0.0  0.0  0.0  0.0  0.0  0.0  0.0  0.0 -1.0  0.0  0.0  0.0  0.0
0.0  0.0
 0.0  0.0  0.0  0.0  0.0  0.0  0.0  0.0  0.0
 0.0  0.0  0.0  0.0  0.0  0.0  0.0  0.0 -1.0  0.0  0.0  0.0  0.0
0.0  0.0
 0.0  0.0  0.0  0.0  0.0  0.0  0.0  0.0  0.0
 0.0  0.0  0.0  0.0  0.0  0.0  0.0  0.0 -1.0  0.0  0.0  0.0  0.0
0.0  0.0
 0.0  0.0  0.0  0.0  0.0  0.0  0.0  0.0  0.0
 0.0  0.0  0.0  0.0  0.0  0.0  0.0  0.0  1.0  0.0  0.0  0.0  0.0
0.0  0.0
 0.0  0.0  0.0  0.0  0.0  0.0  0.0  0.0  0.0
```

```
 0.0 -1.0 -1.0  0.0  0.0  0.0  0.0  0.0  0.0 -1.0  0.0  0.0  0.0
0.0  0.0
 0.0  0.0  0.0  0.0  1.0  0.0  0.0  0.0  0.0
 0.0  0.0  0.0  0.0  0.0  0.0  0.0  0.0  0.0  0.0  0.0  1.0  1.0
0.0  0.0
 0.0  0.0  0.0  0.0  0.0  0.0  0.0  0.0  0.0
 0.0  0.0  0.0  0.0  0.0  0.0  0.0  0.0  0.0  1.0  0.0  1.0  0.0
0.0  0.0
 0.0  0.0  0.0  0.0  0.0  0.0  0.0  0.0  0.0
 0.0  0.0  0.0  0.0  0.0  0.0  0.0  0.0  0.0  0.0  0.0  0.0  1.0
0.0  0.0
 1.0  1.0  1.0 -1.0  0.0  0.0  0.0  0.0  0.0
 0.0  0.0  0.0 -1.0  0.0  0.0  0.0  0.0  0.0  0.0  0.0  0.0  0.0
0.0  0.0
 1.0  1.0  1.0  0.0  0.0  0.0  0.0  0.0  0.0
 0.0  0.0  0.0  0.0  0.0  0.0  0.0  1.0  0.0  0.0  0.0  0.0  0.0
0.0  0.0
 0.0  0.0  0.0  0.0  0.0  0.0  0.0  0.0  0.0
 0.0  0.0  0.0  0.0  0.0  0.0  0.0 -1.0  1.0  0.0  0.0  0.0  0.0
0.0  0.0
 0.0  0.0  0.0  0.0  0.0  0.0  0.0  0.0  0.0
 0.0  0.0  0.0  0.0  0.0  0.0  0.0  1.0  0.0  0.0  0.0  0.0  0.0
0.0  1.0
 0.0  0.0  0.0  0.0  0.0  0.0  0.0  0.0  0.0
 0.0  0.0  0.0  0.0  0.0  0.0  0.0  0.0  0.0  0.0  0.0  0.0  0.0
0.0  1.0
 0.0  0.0  0.0  0.0  0.0  0.0  0.0  0.0  0.0
 0.0  0.0  0.0  0.0  0.0  0.0  0.0  0.0  0.0  0.0  0.0  0.0  0.0
0.0  1.0
 0.0  0.0  0.0  0.0  0.0  0.0  0.0  0.0  0.0
 0.0  0.0  0.0  0.0  0.0  0.0  0.0  0.0 -1.0  0.0  0.0  0.0  0.0
0.0  0.0
 0.0  0.0  0.0  0.0  0.0  0.0  0.0  0.0  0.0
 0.0  0.0  0.0  0.0  0.0  0.0  0.0  0.0  0.0  0.0  0.0  0.0  0.0
0.0  0.0
 0.0  0.0  0.0  0.0  0.0  1.0  0.0  0.0  0.0
 1.0  0.0  0.0  0.0  0.0  0.0  0.0  0.0  0.0  0.0  0.0  0.0  0.0
0.0  0.0
 0.0  0.0  0.0  0.0  0.0  0.0  0.0  0.0  0.0
 0.0  0.0  0.0  0.0  0.0  0.0  0.0  0.0  0.0  1.0  0.0  0.0  0.0
0.0  0.0
 0.0  0.0  0.0  0.0  0.0  1.0  0.0  0.0  0.0
 0.0  0.0  0.0  0.0  0.0  0.0  0.0  0.0  0.0  0.0  0.0  0.0  1.0
1.0  0.0
 0.0  0.0  0.0 -1.0  0.0  0.0  1.0  0.0  0.0
 0.0  0.0  0.0  0.0  0.0  0.0  0.0  0.0  0.0  0.0  0.0  0.0  0.0
0.0 -1.0
 0.0  0.0  0.0  0.0  0.0  0.0  0.0  0.0  0.0
```

Sum of the weights (SWghts) = 1.0

Initial vector Cn

```
 1.0  0.0  0.0  0.0  0.0  0.0  0.0  0.0  0.0  0.0  0.0  0.0  0.0
0.0  0.0
 0.0  0.0  0.0  0.0  0.0  0.0  0.0  1.0  0.0
```

The final matrix V has 24.0 columns, 7.0 rows,
and the cycle starts at row 6.0

The matrix of cycles (Matcycl) is

```
 1.0  0.0  0.0  0.0  0.0  0.0  0.0  1.0  1.0  0.0  0.0  0.0  1.0
1.0  1.0
 1.0  1.0  1.0  0.0  1.0  1.0  1.0  1.0  0.0
```

APPENDIX E
LIMIT CYCLE FROM DEACTIVATION OF GOVERNMENT INVESTMENT IN THE FIXED STABLE VECTOR

Initial vector Cn1

```
 1.0  0.0  0.0  0.0  0.0  0.0  0.0  1.0  1.0  0.0  0.0  0.0  1.0
1.0  1.0
 1.0  1.0  1.0  0.0  1.0  1.0  1.0  0.0  0.0
```

The final matrix V1 has 24.0 columns, 15.0 rows,
and the cycle starts at row 2.0

The matrix of cycles (Matcycl1) is

```
 1.0  0.0  0.0  0.0  0.0  0.0  0.0  0.0  1.0  0.0  0.0  0.0  0.0
0.0  1.0
 0.0  0.0  0.0  0.0  1.0  1.0  0.0  0.0  0.0
 1.0  0.0  0.0  0.0  0.0  0.0  0.0  0.0  1.0  0.0  0.0  0.0  0.0
0.0  0.0
 0.0  0.0  0.0  0.0  1.0  1.0  0.0  0.0  0.0
 1.0  0.0  0.0  0.0  0.0  0.0  0.0  0.0  0.0  0.0  0.0  0.0  0.0
0.0  0.0
 0.0  0.0  0.0  0.0  1.0  1.0  0.0  0.0  0.0
 1.0  1.0  0.0  0.0  0.0  0.0  0.0  0.0  0.0  0.0  0.0  0.0  0.0
0.0  0.0
 0.0  0.0  0.0  0.0  0.0  1.0  0.0  0.0  0.0
 1.0  1.0  1.0  0.0  0.0  0.0  0.0  0.0  0.0  0.0  0.0  0.0  0.0
0.0  0.0
 0.0  0.0  0.0  0.0  0.0  0.0  0.0  0.0  0.0
 1.0  1.0  1.0  0.0  0.0  0.0  0.0  0.0  0.0  1.0  0.0  0.0  0.0
0.0  0.0
 0.0  0.0  0.0  0.0  0.0  0.0  0.0  0.0  0.0
 1.0  1.0  1.0  0.0  0.0  0.0  0.0  0.0  0.0  1.0  0.0  1.0  1.0
0.0  0.0
 0.0  0.0  0.0  0.0  0.0  0.0  0.0  0.0  0.0
 1.0  1.0  1.0  0.0  0.0  0.0  0.0  0.0  0.0  1.0  0.0  1.0  1.0
0.0  0.0
 1.0  1.0  1.0  0.0  0.0  0.0  0.0  0.0  0.0
 1.0  1.0  1.0  0.0  0.0  0.0  0.0  1.0  0.0  1.0  0.0  1.0  1.0
0.0  1.0
 1.0  1.0  1.0  0.0  0.0  0.0  0.0  0.0  0.0
 1.0  1.0  1.0  0.0  0.0  0.0  0.0  0.0  1.0  1.0  0.0  1.0  1.0
0.0  1.0
 1.0  1.0  1.0  0.0  0.0  0.0  0.0  0.0  0.0
```

1.0 0.0 0.0 0.0 0.0 0.0 0.0 0.0 1.0 0.0 0.0 1.0 1.0
0.0 1.0
1.0 1.0 1.0 0.0 1.0 0.0 0.0 0.0 0.0
1.0 0.0 0.0 0.0 0.0 0.0 0.0 0.0 1.0 0.0 0.0 0.0 1.0
0.0 1.0
1.0 1.0 1.0 0.0 1.0 1.0 0.0 0.0 0.0
1.0 0.0 0.0 0.0 0.0 0.0 0.0 0.0 1.0 0.0 0.0 0.0 0.0
0.0 1.0
1.0 1.0 1.0 0.0 1.0 1.0 0.0 0.0 0.0

REFERENCES

Anderson, R. S., E. Levy, and B. M. Morrison. Rice Science and Development Politics: Research Strategies and IRRI's Technologies Confront Asian Diversity (1950 - 1980). Oxford: Clarendon Press, 1991.

Australian Center for International Agricultural Research (ACIAR). A Act of Faith: Research Helps Feed the Hungry. Canberra, Australia: ACIAR, 1989.

Axelrod, R. ed. Structure of Decision. Princeton: Princeton University Press, 1976.

Baum, W. C. Partners Against Hunger. Washington, D.C.: The World Bank, 1986.

Borlaugh, N. E. "Reaching Sub-Saharan Africa's Small Scale Farmers with Improved Technology." Agricultural Issues in the 1990s: Proceedings of the Eleventh Agriculture Sector Symposium. Washington, D.C.: The World Bank, 1990.

Boulding, K. The Image: Knowledge in Life and Society. Ann Arbor: The University of Michigan Press, 1977.

Boulding, K. Towards a New Economics. Hants, England: Edward Elgar Publishing Limited, 1992.

Bromley, D. Economic Interests and Institutions: The Conceptual Foundations of Public Policy. New York: Basil Blackwell Inc., 1989.

Brown, L. R. ed. State of the World 1990. A Worldwatch Institute Report on Progress Toward a Sustainable Society. New York: W.W. Norton & Company, 1990.

Busch, L. and W. B. Lacy. Science, Agriculture, and the Politics of Research. Boulder: Westview Press, Inc., 1983.

Busch, L. and W. B. Lacy, ed. The Agricultural Scientific Enterprise. Boulder: Westview Press, Inc., 1986.

Bush, P. "An Exploration of the Structural Characteristics of a Veblen-Ayres-Foster Defined Institutional Domain." Journal of Economic Issues. Vol. XVII No. 1, March 1983.

Castaneda, H. Thinking and Doing: The Philosophical Foundations of Institutions. Dordrecht, Holland: D. Reidel Publishing Company, 1975

Commons, J. R. Institutional Economics. New York: The Macmillan Company, 1934.

Dahlberg, K. A. Beyond the Green Revolution: The Ecology and Politics of Global Agricultural Development. New York: Plenum Press, 1979.

Georgescu-Roegen, N. The Entropy Law and the Economic Process. Cambridge: Harvard University Press, 1971.

Hayami, Y. and V. W. Ruttan. Agricultural Development: An International Perspective. Baltimore: The John Hopkins University Press, 1985.

Hodgson, G. M. Economics and Institutions. Philadelphia: University of Pennsylvania, 1988.

Kaplan, A. The Conduct of Inquiry. San Francisco: Chandler Publishing Co., 1964.

Kosko, B. "Adaptive Inference in Fuzzy Knowledge Networks." Proceedings of the 1st IEEE International Conference on Neural Networks (ICNN-87), Vol. II, 261-268, June 1987.

Kosko, B. Neural Networks and Fuzzy Systems: A Dynamical Systems Approach to Machine Intelligence. Englewood Cliffs, New Jersey: Prentice-Hall. Inc., 1992.

Kosko, B. Fuzzy Thinking: The New Science of Fuzzy Logic. New York: Hyperion, 1993.

Kuhn, T. S. The Structure of Scientific Revolution. Chicago: University of Chicago Press, 1970.

Lindblom, C. E. Inquiry and Change. New Haven: Yale University Press, 1990.

Masefield, G. B. A Short History of Agriculture in the British Colonies. Oxford: Clarendon Press, 1950.

Miyamoto, Sadaaki. Fuzzy Sets in Information Retrieval and Cluster Analysis. Netherlands: Kluwer Academic Publishers, 1990.

Moffat, A. S. "Does Global Change Threaten The World Food Supply?" Science 256(22 May 1992):1140-1141.

Muller, J. Z. Adam Smith in His Time and Ours: Designing the Decent Society. New York: The Free Press, 1993.

North, D. C. Institutions, Institutional Change and Economic Performance. New York: Cambridge University Press, 1990.

North, D. C. "Institutions." Journal of Economic Perspectives. Volume 5, No. 1 (Winter 1991):97-112.

Pardey, P. G. and J. Roseboom. ISNAR Agricultural Research Indicator Series: A Global Data Base on National Agricultural Research Systems. New York: Cambridge University Press, 1989.

Paarlberg, D. "The Case for Institutional Economics." American Journal of Agricultural Economics 75(August 1993):823-827.

Radzicki, M. "Institutional Dynamics: An Extension of the Institutionalist Approach to Socioeconomic Analysis." Journal of Economic Issues. Vol. XXII No. 3, September 1988.

Radzicki, M. "Institutional Dynamics, Deterministic Chaos, and Self-Organizing Systems." Journal of Economic Issues. Vol. XXIV No. 1, March 1990.

Richardson, G. P. Feedback Thought in Social Science and Systems Theory. Philadelphia: University of Pennsylvania Press, 1991.

Robinson, D.F. and L.R. Foulds. Digraphs: Theory and Techniques. New York: Gordon and Breach Science Publishers, 1980

Sauer, C. O. Agricultural Origins and Dispersals. New York: American Geographical Society, 1952.

Schultz, T. W. "The Allocation of Resources to Research." Resource Allocation in Agricultural Research, ed. W.L. Fishel. Minneapolis: University of Minnesota Press, 1971.

Schmid, A. A. Property, Power, and Public Choice: An Inquiry into Law and Economics. New York: Praeger, 1987.

Schmink, M. Biodiversity Conservation in the Institutional Context of the Tropical Andes. Consulting Report for theJohn D. and Catherine T. MacArthur Foundation Program on World Environment and Resources. Gainesville: Center for Latin American Studies, 1993.

Smith, A. The Wealth of Nations. New York: The Modern Library, 1937.

Stakman, E. C., R. Bradfield and P. C. Mangelsdorf. Campaigns Against Hunger. Cambridge: The Belknap Press of Harvard University Press, 1967.

Styblinski, M. A. and B. D. Meyer. "Fuzzy Cognitive Maps, Signal Flow Graphs, and Qualitative Circuit Analysis." Proceedings of the 2nd IEEE International Conference on Neural Networks, Vol. II, July 1988:549-556.

Technical Advisory Committee (TAC). CGIAR Priorities and Future Strategies. Rome: Food and Agriculture Organization of the United Nations, 1988.

Technical Advisory Committee (TAC). A Review of CGIAR Priorities. Rome: Food and Agriculture Organization of the United Nations, 1991.

United Nations. Environmental Data Report 1991/92, 3rd edition. United Nations Environment Programme (UNEP). Oxford: Basil Blackwell Ltd., 1991.

United Nations. Long-range World Population Projections: Two Centuries of Population Growth, 1950 - 2150. New York: Department of International Economic and Social Affairs, 1992.

Varian, H. R. Microeconomic Analysis. New York: W. W. Norton & Company, 1984.

Veblen, Thorstein, The Theory of the Leisure Class. New York: The Viking Press, 1943.

von der Osten-Sacken, A. "New Directions for the CGIAR." Finance & Development.Washington D.C.: The World Bank, March 1992.

Walsh, J., "Preserving the Options: Food Production and Sustainability." Issues in Agriculture No. 2. Washington D.C.: Consultative Group on International Agricultural Research, 1991.

Williamson, O. E. The Economic Institutions of Capitalism. New York: Free Press, 1985.

Wortman, S. and R. W. Cummings, Jr. To Feed This World. Baltimore: The John Hopkins University Press, 1978.

BIOGRAPHICAL SKETCH

Adrian Fajardo-Christen was born in Lima, Peru, on September 8, 1941. He is now a U.S. resident. He graduated from the Escuela Agricola Panamericana "El Zamorano", Honduras in December, 1965 and won The Rockefeller Foundation scholarship to continue studies in the U.S., graduating from the University of Florida with a Bachelor of Science in Agriculture degree in August, 1967. Accepted by the University of Florida Graduate School, he received his Master of Science in Agriculture degree in December, 1969 and continued with the Ph.D. program. He was admitted to candidacy in 1972. In April 1972, he joined the staff of InduPeru, an autonomous development corporation in Peru, and became its Gerente General (CEO) in 1975. In 1980 he joined the International Potato Center (CIP) as Director de Administracion (Executive Officer), a senior management position in an international agricultural research center that is part of the Consultative Group on International Agricultural Research system. In use of a sabbatical he returned to the University of Florida in August, 1991, to complete his Ph.D., again taking courses in economics, agricultural policy and econometrics. He successfully re-qualified in the written and oral

examinations, being readmitted as a Ph.D. candidate in October, 1992. Based on the need to extend his stay to finish the dissertation, he ended his contract with CIP in December, 1992. He is married to the former Martha Brou. He has two sons, Adrian and Diego, and a daughter, Nuria.

I certify that I have read this study and that in my opinion it conforms to acceptable standards of scholarly presentation and is fully adequate, in scope and quality, as a dissertation for the degree of Doctor of Philosophy.

Chris O. Andrew, Chair
Professor of Food and Resource Economics

I certify that I have read this study and that in my opinion it conforms to acceptable standards of scholarly presentation and is fully adequate, in scope and quality, as a dissertation for the degree of Doctor of Philosophy.

Clyde F. Kiker
Professor of Food and Resource Economics

I certify that I have read this study and that in my opinion it conforms to acceptable standards of scholarly presentation and is fully adequate, in scope and quality, as a dissertation for the degree of Doctor of Philosophy.

Max. R. Langham
Professor of Food and Resource Economics

I certify that I have read this study and that in my opinion it conforms to acceptable standards of scholarly presentation and is fully adequate, in scope and quality, as a dissertation for the degree of Doctor of Philosophy.

Gary D. Lynne
Professor of Food and Resource Economics

I certify that I have read this study and that in my opinion it conforms to acceptable standards of scholarly presentation and is fully adequate, in scope and quality, as a dissertation for the degree of Doctor of Philosophy.

Robert D. Emerson
Professor of Food and Resource Economics

I certify that I have read this study and that in my opinion it conforms to acceptable standards of scholarly presentation and is fully adequate, in scope and quality, as a dissertation for the degree of Doctor of Philosophy.

Terry L. McCoy
Professor of Political Science

This dissertation was submitted to the Graduate Faculty of the College of Agriculture and to the Graduate School and was accepted as partial fulfillment of the requirements for the degree of Doctor of Philosophy.

December 1993

Dean, College of Agriculture

Dean, Graduate School