Curriculum Center Library & NASA ERC
RR # 1 POB 9296
Kingshill, VI 00850-9718
(340) 778-1600 (340) 778-5724 FAX
Curriculum Center Library

What is Engineering?
Grade 3

The simple definition for engineering is to plan and construct something for a purpose. Students will see short videoclip (3 minutes) of a robotic arm in space ://www.nasa.gov/mov/329198main_Robotic_Arm.mov

Materials and implementation assistance are provided by NASA education specialist. Call 778-1600x7507

VI Science Standards practiced:

S.3PHS.1

The learner will be able to describe and compare the different forms of energy.

The student knows the many ways in which energy can be transformed from one type to another.

The student knows that heat can be produced by chemical reactions, electrical machines, and friction.

Common Core State Standards practiced in the activity here

Materials needed
Styrofoam coffee cups (2 each)
String
Cellophane tape
Scissors
Plastic picnic knives (serrated)
12 oz plastic bottles
Water
Balance
Graph paper
Pencil
dictionary

VIRGIN ISLANDS DEPARTMENT OF EDUCATION
Curriculum Center
RR # 1 POB 9296
Kingshill, VI 00850-9718
(340) 778-1600 (340) 778-5724 FAX
Curriculum Center Library

Procedure:

1. Nest the two cups together and cut through both cups where indicated in the diagram by the dashed line. Smooth

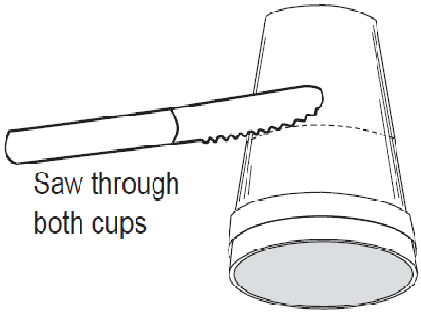

the cut edges by scraping them with the picnic knife edge.
2. Cut three pieces of string 12 centimeters long each.

3. Tape the end of the first string to the inside of the inner coffee cup just below the cut edge. Tape the other end of the string to the outside of the cup but do not press this piece of tape tightly yet.
4. Repeat step 3 twice more, but place the strings about 1/3 of the way (120 degrees) around the cup from the first string.
5. While holding the rim of the inner cup, rotate the outer cup until the three strings cross each other. The strings will have some slack. Pull the end of the strings on the outside until they are straight and intersect exactly in the middle of the opening. Press the tape on the outside to hold the strings.
6. Use the robotic arm "end effector" to pick up an object such as a pencil. Have someone hold a pencil upright. Open your end effector so that the strings are not crossing each other. Slip the end effector over the pencil so that the pencil extends down the center and not through any of the loops. Rotate the outer cup until the strings grasp the pencil. Pick up the pencil.

7. You may find that the pencil is too slippery to be held securely. How might you modify the pencil so that it can be held? Design a standard grapple fixture that can be mounted to other objects so that they can be picked up.

Assessment:
Review the tables or charts created by your students. Pay special attention to the ideas students have for improving their grapple fixtures.

Assessment worksheet

Engineering Worksheet

1. What two types of units are found on your ruler?

2. Find the centimeter side, how many total are there? How many inches does that equal?

3. How could you increase the amount of weight that your robot hand can hold?

4. What types of materials cannot be picked up by this type of "hand"?

5. Use the graph space below to show the mass of each object lifted.

VIRGIN ISLANDS DEPARTMENT OF EDUCATION
Curriculum Center
RR # 1 POB 9296
Kingshill, VI 00850-9718
(340) 778-1600 (340) 778-5724 FAX
Curriculum Center Library

6. How could you change the object being lifted to make it easier to grasp?

Math Standards

CCM 3.NF.3c Express whole numbers as fractions, and recognize fractions that are equivalent to whole numbers.

CCM 3.MD.4 Generate measurement data by measuring lengths using rulers marked with halves and fourths of an inch. Show the data by making a line plot, where the horizontal scale is marked off in appropriate units—whole numbers, halves, or quarters.

CCM 3.OA.8 Solve two-step word problems using the four operations. Represent these problems using equations with a letter standing for the unknown quantity. Assess the reasonableness of answers using mental computation and estimation strategies including rounding. nearest 10 or 100.

English and Language Arts

SL.3.1. Engage effectively in a range of collaborative discussions (one-on-one, in groups, and teacher-led) with diverse partners on *grade 3 topics and texts*, building on others' ideas and expressing their own clearly.

a. Come to discussions prepared, having read or studied required material; explicitly draw on that preparation and other information known about the topic to explore ideas under discussion.

b. Ask questions to check understanding of information presented, stay on topic, and link their comments to the remarks of others.

c. Explain their own ideas and understanding in light of the discussion.

SL.3.6 Speak in complete sentences when appropriate to task and situation in order to provide requested detail or clarification.

VIRGIN ISLANDS DEPARTMENT OF EDUCATION
Curriculum Center
RR # 1 POB 9296
Kingshill, VI 00850-9718
(340) 778-1600 (340) 778-5724 FAX
Curriculum Center Library