Curriculum Center Library & NASA ERC
RR # 1 POB 9296
Kingshill, VI 00850-9718
(340) 778-1600 (340) 778-5724 FAX
Curriculum Center Library

What is Engineering?
Grade 2

Materials and implementation assistance are provided by NASA education specialist. Call 778-1600x7507

The simple definition for engineering is to plan and construct something for a purpose. Students will see short videoclip (3 minutes) of a robotic arm in space ://www.nasa.gov/mov/329198main_Robotic_Arm.mov

Materials are provided by NASA Education Specialist. The following second grade standards are addressed:

VI Science Standards practiced:

S2.REI.2 The learner will be able to use scientific equipment safely and appropriately (magnifying glass, ruler, thermometer). (Example: in this activity, using a ruler)

S2.REI.1 The learner will be able to develop a problem and solve it individually or in groups doing different things that contribute to the results. (Example: trial and error to build the device to grab and hold larger masses, shapes, etc.)

Common Core State Standards practiced in this activity here

Materials needed
Styrofoam coffee cups (2 each)
String
Cellophane tape
Scissors
Plastic picnic knives (serrated)
12 oz plastic bottles
Water
Balance
Graph paper
Pencil
dictionary

VIRGIN ISLANDS DEPARTMENT OF EDUCATION
Curriculum Center
RR # 1 POB 9296
Kingshill, VI 00850-9718
(340) 778-1600 (340) 778-5724 FAX
Curriculum Center Library

Procedure:

1. Nest the two cups together and cut through both cups where indicated in the diagram by the dashed line. Smooth

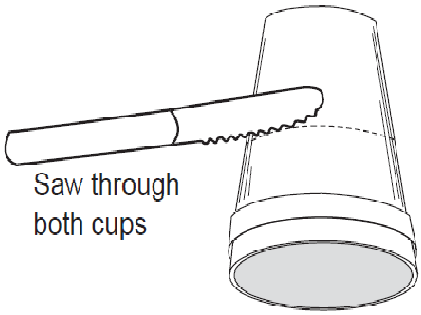

the cut edges by scraping them with the picnic knife edge.
2. Cut three pieces of string 12 centimeters long each.

3. Tape the end of the first string to the inside of the inner coffee cup just below the cut edge. Tape the other end of the string to the outside of the cup but do not press this piece of tape tightly yet.
4. Repeat step 3 twice more, but place the strings about 1/3 of the way (120 degrees) around the cup from the first string.
5. While holding the rim of the inner cup, rotate the outer cup until the three strings cross each other. The strings will have some slack. Pull the end of the strings on the outside until they are straight and intersect exactly in the middle of the opening. Press the tape on the outside to hold the strings.
6. Use the robotic arm "end effector" to pick up an object such as a pencil. Have someone hold a pencil upright. Open your end effector so that the strings are not crossing each other. Slip the end effector over the pencil so that the pencil extends down the center and not through any of the loops. Rotate the outer cup until the strings grasp the pencil. Pick up the pencil.

7. You may find that the pencil is too slippery to be held securely. How might you modify the pencil so that it can be held? Design a standard grapple fixture that can be mounted to other objects so that they can be picked up.

Assessment:
Review the tables or charts created by your students. Pay special attention to the ideas students have for improving their grapple fixtures.

Assessment worksheet

Engineering Worksheet

1. What two types of units are found on your ruler?

2. Find the centimeter side, how many total are there? How many inches does that equal?

3. How could you increase the amount of weight that your robot hand can hold?

VIRGIN ISLANDS DEPARTMENT OF EDUCATION
Curriculum Center
RR # 1 POB 9296
Kingshill, VI 00850-9718
(340) 778-1600 (340) 778-5724 FAX
Curriculum Center Library

4. What types of materials cannot be picked up by this type of "hand"?

5. Use the graph space below to show the mass of each object lifted.

6. How could you change the object being lifted to make it easier to grasp?

Math Standards

CCM 2.MD.2 Measure the length of an object twice, using length units of different lengths for the two measurements; describe how the two measurements relate to the size of the unit chosen (Example: Measure the strings in inches and centimeters and explain why the centimeter measurement is a bigger number than the inches measurement)

CCM 2.MD.10 Draw a picture graph and a bar graph (with single-unit scale) to represent a data set with up to four categories. Solve simple put together, take-apart, and compare problems4 using information presented in a bar graph.
(Example: pick up 4 different objects with the robotic arm and make a bar graph showing the mass of each object)

SMP3 Construct viable arguments and critique the reasoning of others. (Example: During the conclusion phase of the activity, explain the causes of the limitations on the total amount of weight that can be lifted

SMP6 Attend to precision. (Practiced throughout completing the hands on procedures)

VIRGIN ISLANDS DEPARTMENT OF EDUCATION
Curriculum Center
RR # 1 POB 9296
Kingshill, VI 00850-9718
(340) 778-1600 (340) 778-5724 FAX
Curriculum Center Library

English and Language Arts

L1.SPL.2	The learner will be able to apply phonemic awareness to spell (Example: term for robotic arm is "end effector")
SL.2.1a	Follow agreed-upon rules for discussions (e.g., gaining the floor in respectful ways, listening to others with care, speaking one at a time about the topics and texts under discussion).
SL.2.1b.	Build on others' talk in conversations by linking their comments to the remarks of others.
SL2.1c	Ask for clarification and further explanation as needed about the topics and text under discussion.